Compal Confidential

Schematic Document

Cantiga + ICH9

2008 / 12 / 10 Rev:1.0

Security Classification	Compal Secret Data		
Issued Date	2007/1/15	Deciphered Date	2008/1/15

Compal Electronics, Inc.

Title: *Cover Sheet*

Size: Custom | Document Number: *LA-4841P* | Rev: 1.0

Date: Monday, December 15, 2008 | Sheet 1 of 45

Compal confidential

File Name : LA-4841P

MLK 14

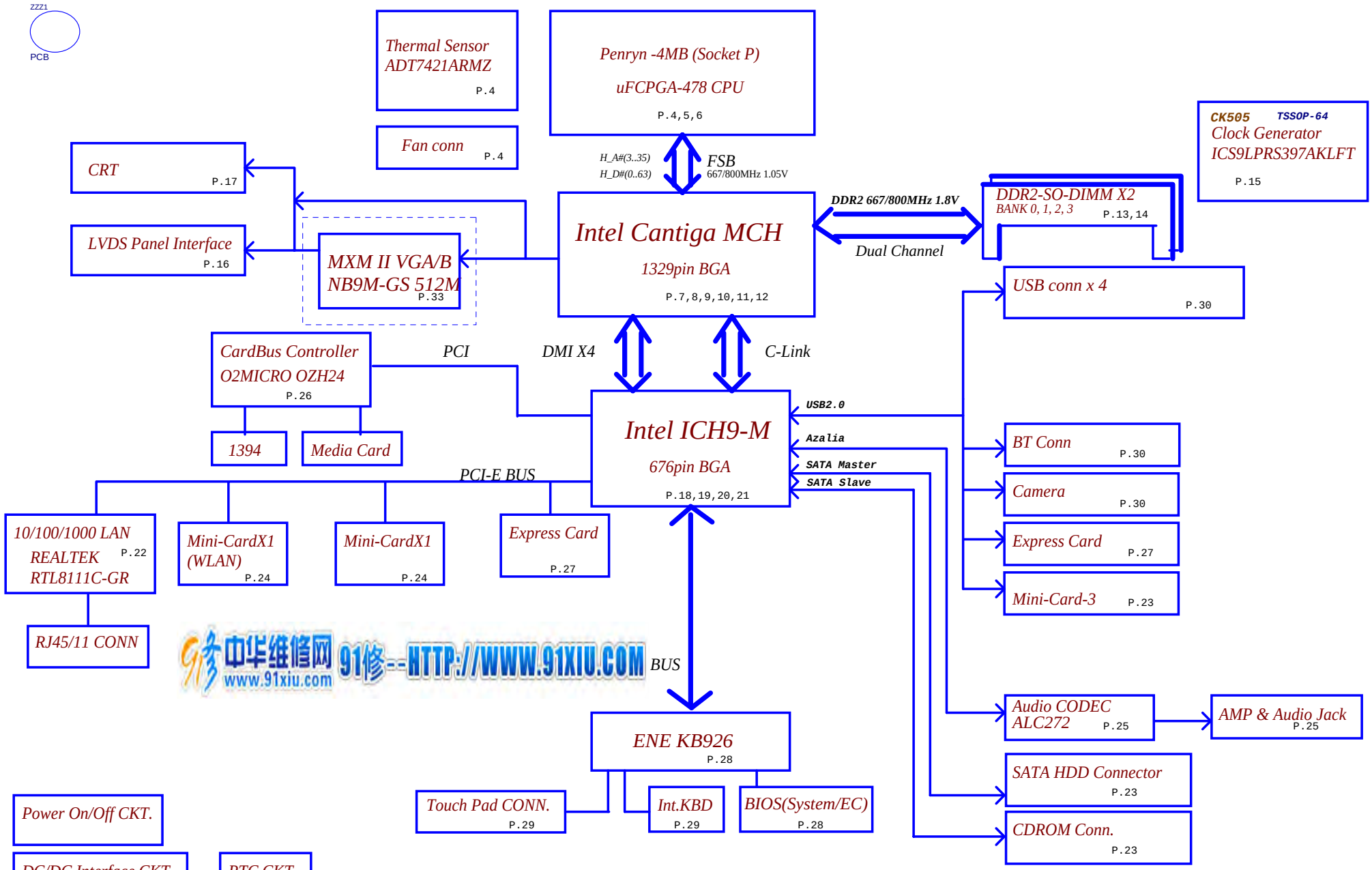

Security Classification	Compal Secret Data		
Issued Date	2007/1/15	Deciphered Date	2008/1/15

Compal Electronics, Inc.

Title: **Block diagram**

Size: Custom | Document Number: LA-4841P | Rev: 1.0

Date: Monday, December 15, 2008 | Sheet 2 of 45

Voltage Rails

O MEANS ON X MEANS OFF

power plane / State	+B	+5VALW +3VALW	+1.8V	+5VS +3VS +1.5VS +0.9V +VCCP +CPU_CORE +VGA_CORE +2.5VS +1.8VS +1.2VS +0.9VGA
S0	O	O	O	O
S1	O	O	O	O
S3	O	O	O	X
S5 S4/AC	O	O	X	X
S5 S4/ Battery only	O	X	X	X
S5 S4/AC & Battery don't exist	X	X	X	X

Symbol Note :

: means Digital Ground

: means Analog Ground

@ : means just reserve , no build
DEBUG@ : means just reserve for debug.

SMBUS Control Table

	SOURCE	INVERTER	BATT	SERIAL EEPROM	THERMAL SENSOR (CPU)	SODIMM	CLK CHIP	MINI CARD	LCD
SMB_EC_CK1 SMB_EC_DA1	KB926	X	V	V	X	X	X	X	X
SMB_EC_CK2 SMB_EC_DA2	KB926	X	X	X	V	X	X	X	X
SMB_CK_CLK1 SMB_CK_DAT1	ICH9	X	X	X	X	V	V	V	X
LCD_CLK LCD_DAT	Cantiga	X	X	X	X	X	X	X	V

I2C / SMBUS ADDRESSING

DEVICE	HEX	ADDRESS
DDR SO-DIMM 0	A0	10100000
DDR SO-DIMM 1	A4	10100100
CLOCK GENERATOR (EXT.)	D2	11010010

Security Classification	Compal Secret Data		
Issued Date	2005/03/10	Deciphered Date	2006/03/10

Compal Electronics, Inc.

Title: **Notes List**

Size: Custom | Document Number: LA-4841P | Rev: 1.0

Date: Monday, December 15, 2008 | Sheet 3 of 45

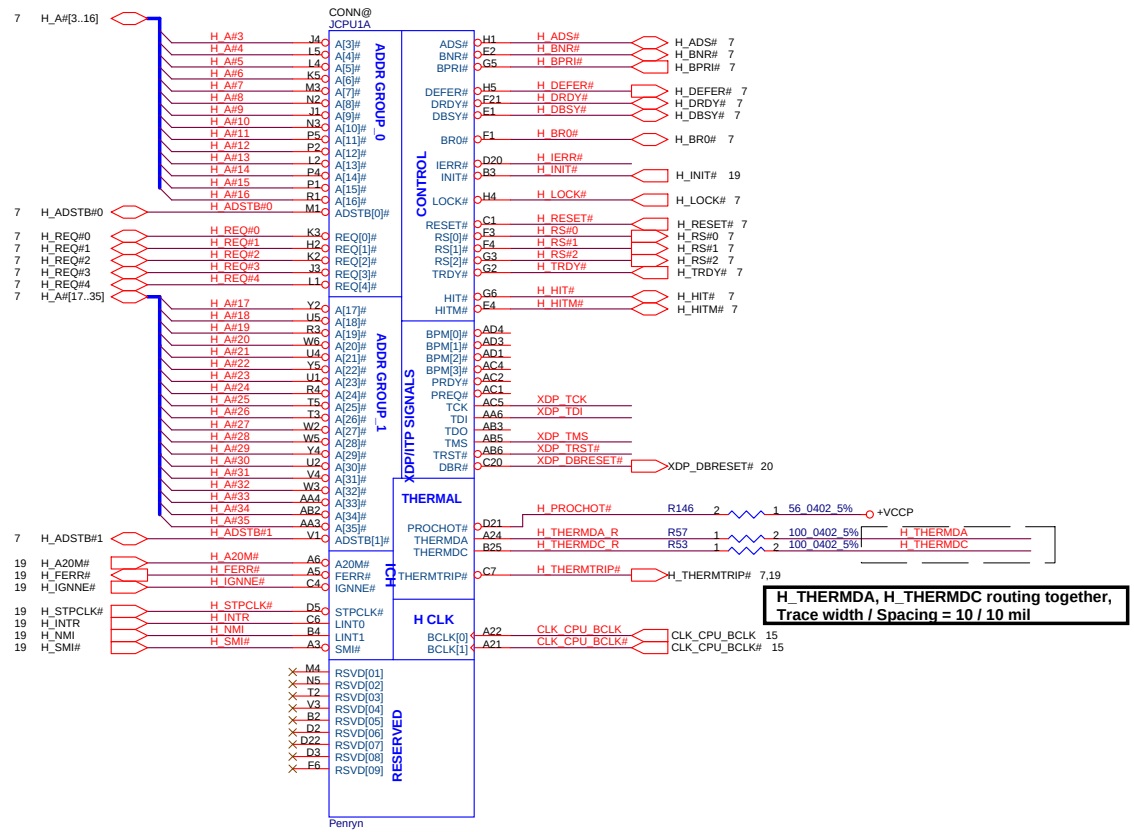

H_THERMDA, H_THERMDC routing together, Trace width / Spacing = 10 / 10 mil

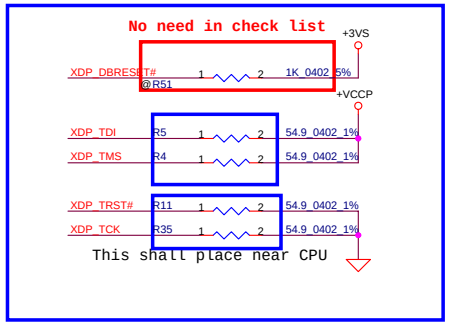

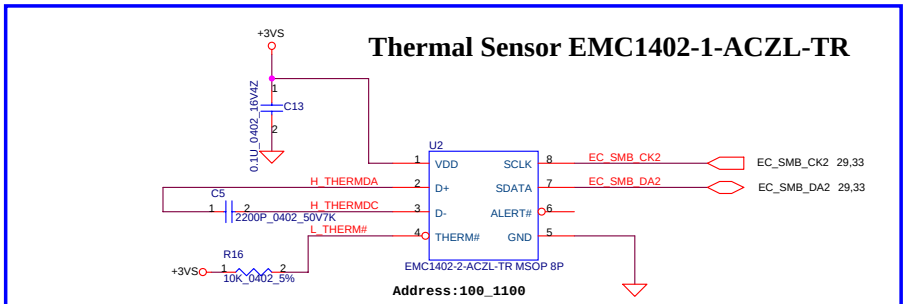

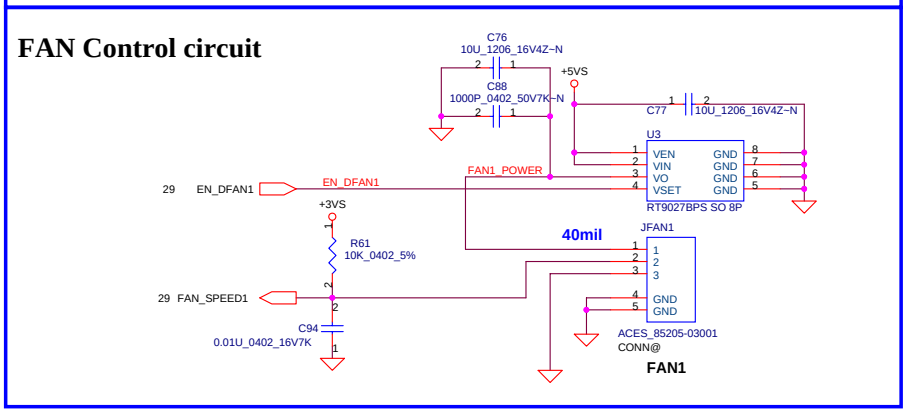

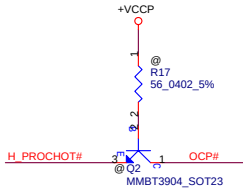

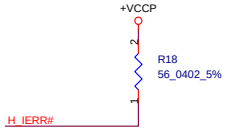

Security Classification	Compal Secret Data		
Issued Date	2006/02/13	Deciphered Date	2006/03/10

Compal Electronics, Inc.

Title: **Penryn(1/3)-AGTL+/ITP-XDP**

Size: Custom | Document Number: LA-4841P | Rev: 1.0

Date: Monday, December 15, 2008 | Sheet 4 of 45

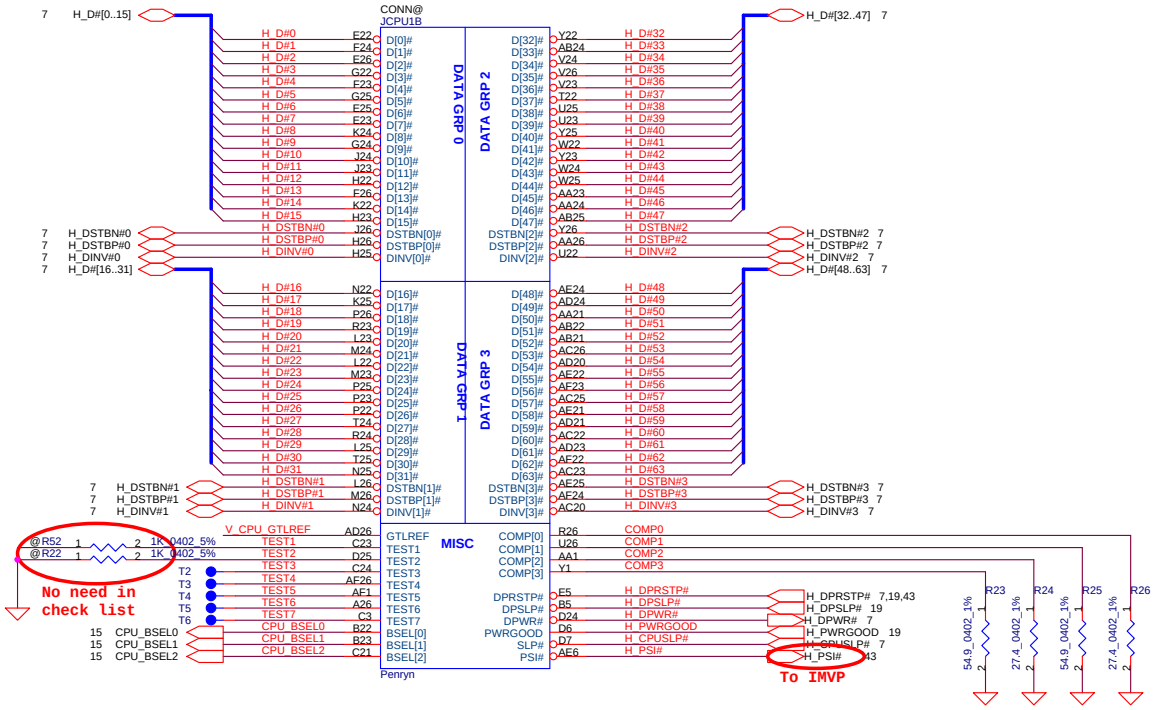

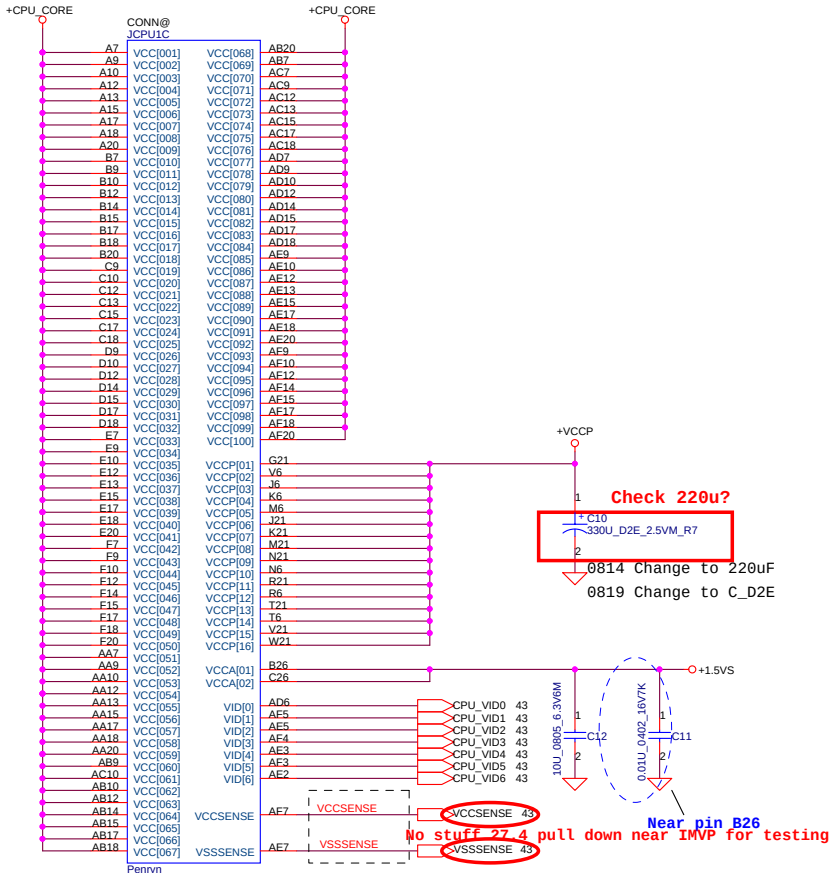

layout note: Rout H_DPRSTP# from ICH9 to IMVP6 then to GMCH & CPU

layout note: Route TEST3 & TEST5 traces on ground referenced layer to the TPs

CPU_BSEL	CPU_BSEL2	CPU_BSEL1	CPU_BSEL0
166	0	1	1
200	0	1	0
266	0	0	0

Resistor placed within 0.5" of CPU pin.Trace should be at least 25 mils away from any other toggling signal. COMP[0,2] trace width is 18 mils. COMP[1,3] trace width is 4

Length match within 25 mils. The trace width/space/other is 20/7/25.

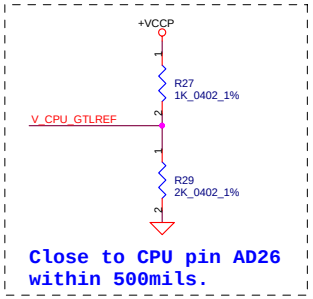

For 6 layer
Z=27.4 ohm
VCCSENSE, VSSSENSE/ 14mils (MS), 16mils (SL) width, 7mils space, 25mils space to other signals Mismatch =25mils.

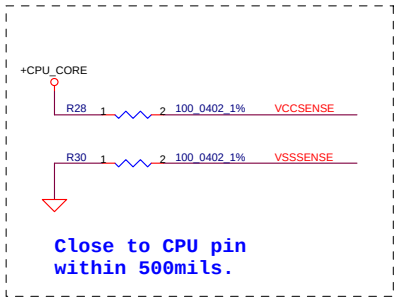

Security Classification	Compal Secret Data		
Issued Date	2006/02/13	Deciphered Date	2006/03/10

Compal Electronics, Inc.

Title: Penryn(2/3)-AGTL+/ITP-XDP

Size: Custom | Document Number: LA-4841P | Rev: 1.0

Date: Monday, December 15, 2008 | Sheet 5 of 45

High Frequence Decoupling

10uF 0805 X5R -> 85 degree.

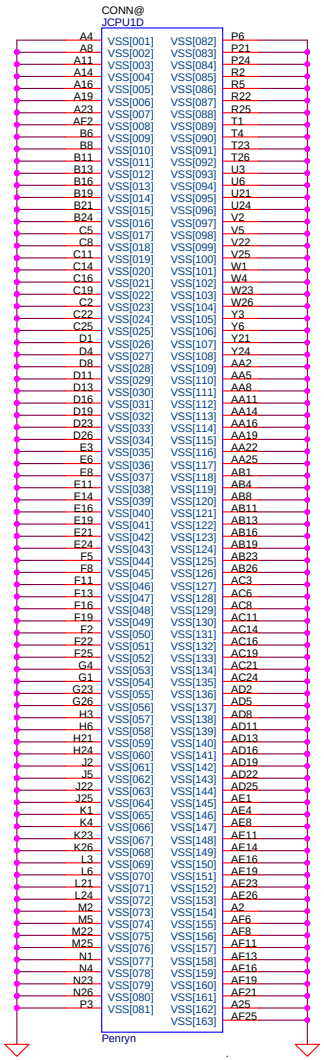

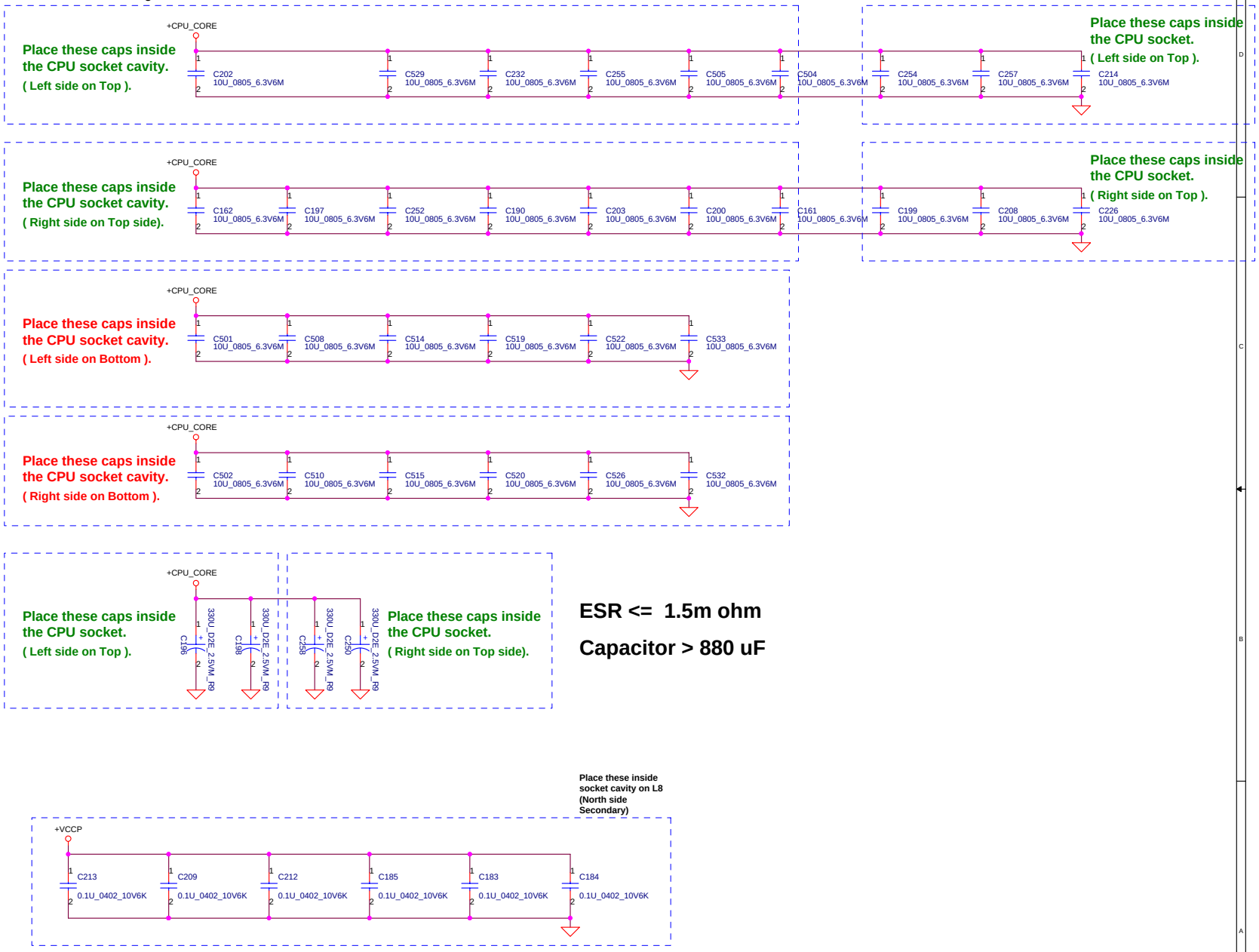

Security Classification	Compal Secret Data		
Issued Date	2006/02/13	Deciphered Date	2006/03/10

Compal Electronics, Inc.

Title: **Penryn(3/3)-AGTL+/ITP-XDP**

Size: Custom | Document Number: *LA-4841P* | Rev: 1.0

Date: Monday, December 15, 2008 | Sheet 6 of 45

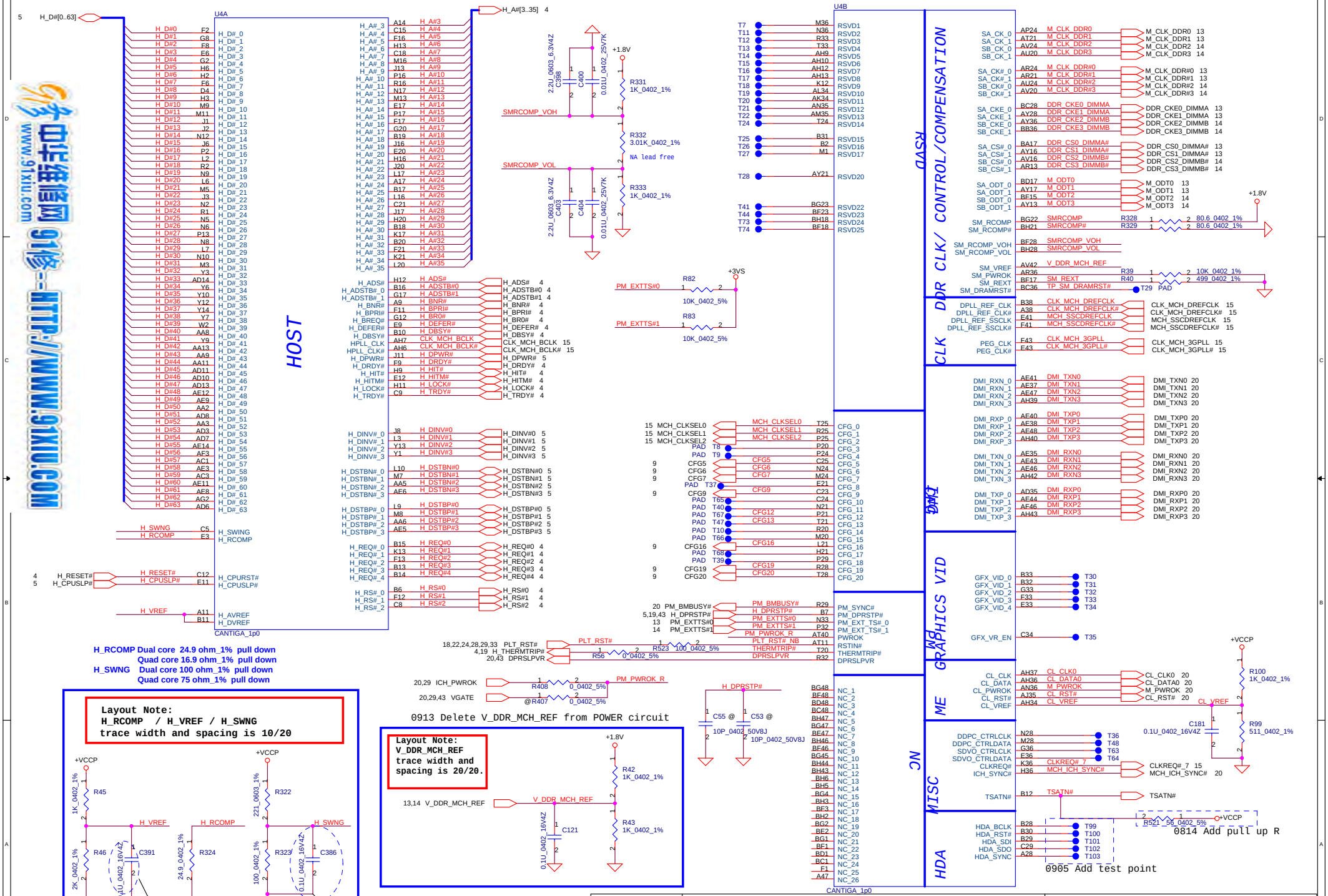

Security Classification	Compal Secret Data		
Issued Date	2006/02/13	Deciphered Date	2006/03/10

Compal Electronics, Inc.

Title: Cantiga(1/6)-AGTL/DMI/DDR

Size: Custom | Document Number: LA-4841P | Rev: 1.0

Date: Monday, December 15, 2008 | Sheet 7 of 45

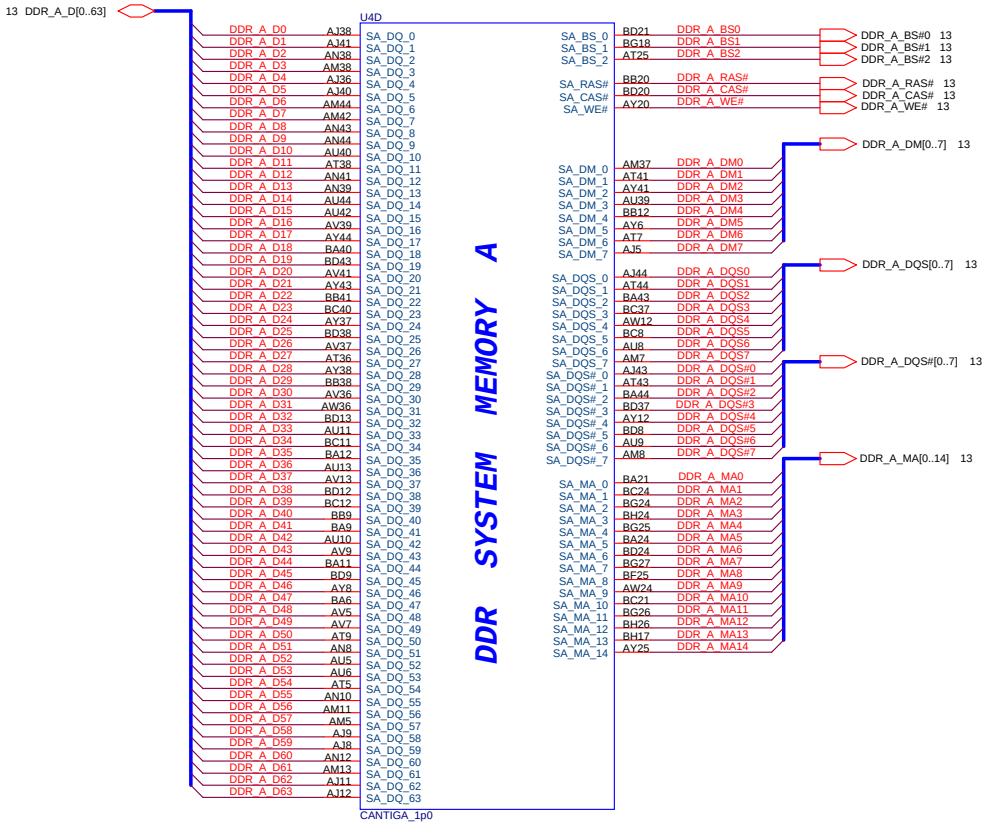

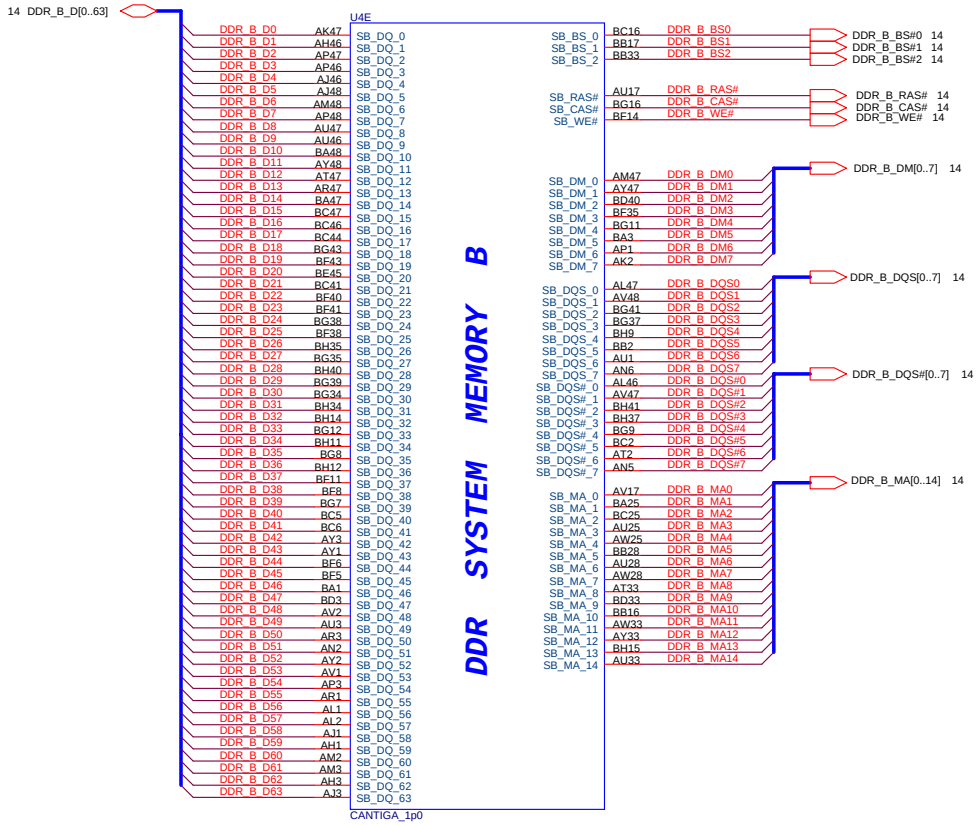

Security Classification	Compal Secret Data			Compal Electronics, Inc.
Issued Date	2006/02/13	Deciphered Date	2006/03/10	Title: Cantiga(2/6)-DDR2 A/B CH

Size	Document Number	Rev
Custom	LA-4841P	1.0

Date: Monday, December 15, 2008 Sheet 8 of 45

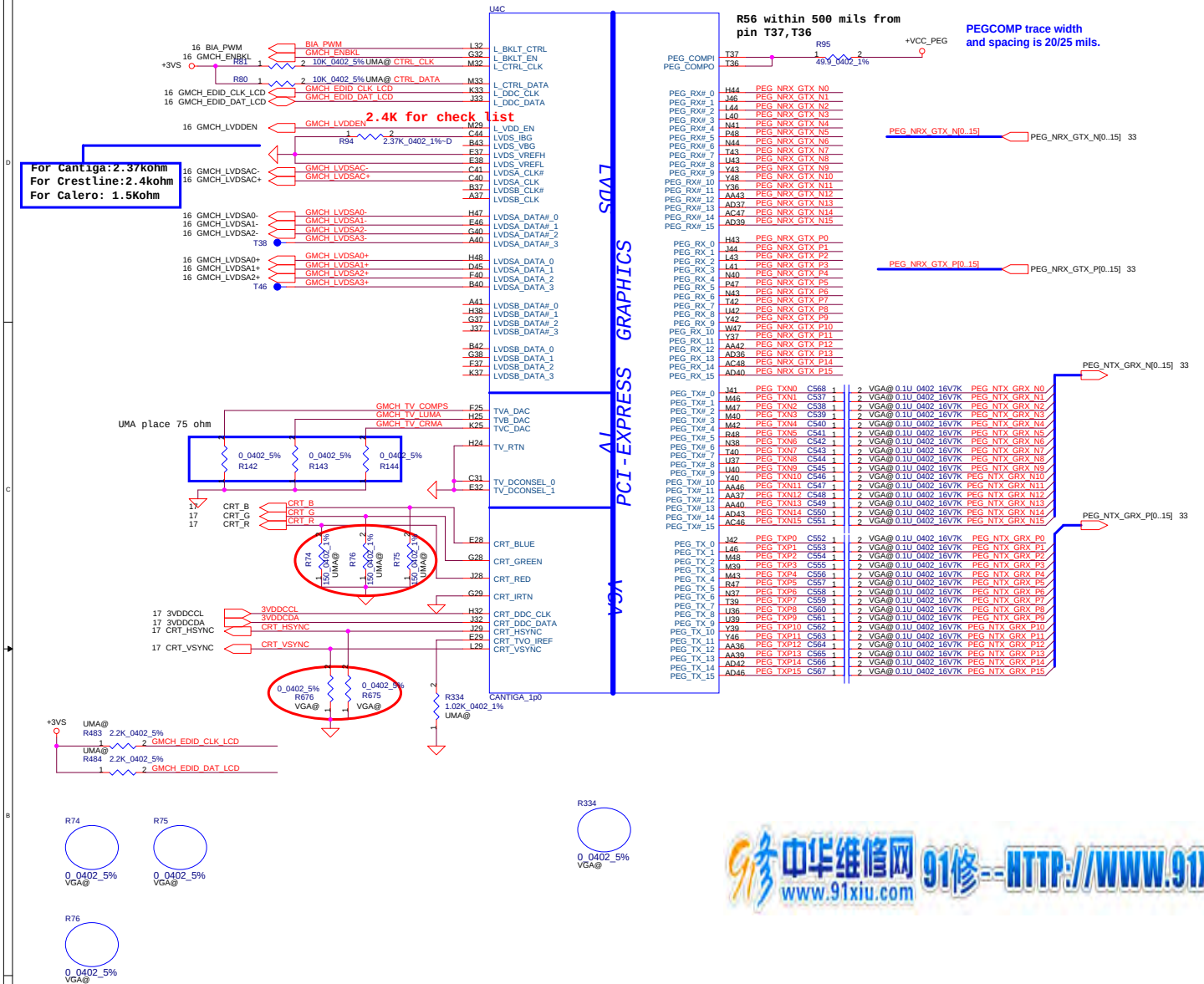

Strap Pin Table

CFG[2:0] FSB Freq select	000 = FSB 1066MHz 010 = FSB 800MHz 011 = FSB 667MHz Others = Reserved
CFG[4:3]	Reserved
CFG5 (DMI select)	0 = DMI x 2 1 = DMI x 4 *
CFG6	0 = The iTPM Host Interface is enable * 1 = The iTPM Host Interface is disable
CFG7 (Intel Management Engine Crypto strap)	0 =(TLS)chiper suite with no confidentiality 1 =(TLS)chiper suite with confidentiality *
CFG8	Reserved
CFG9 (PCIE Graphics Lane Reversal)	0 = Reverse Lane,15->0, 14->1 1 = Normal Operation,Lane Number in order *
CFG10 (PCIE Lookback enable)	0 = Enable 1 = Disable *
CFG11	Reserved
CFG[13:12] (XOR/ALLZ)	00 = Reserved 01 = XOR Mode Enabled 10 = All Z Mode Enabled 11 = Normal Operation(Default) *
CFG[15:14]	Reserved
CFG16 (FSB Dynamic ODT)	0 = Disabled 1 = Enabled *
CFG[18:17]	Reserved
CFG19 (DMI Lane Reversal)	0 = Normal Operation * (Lane number in Order) 1 = Reverse Lane
CFG20 (PCIE/SDVO concurrent)	0 = Only PCIE or SDVO is operational. * 1 = PCIE/SDVO are operating simu.

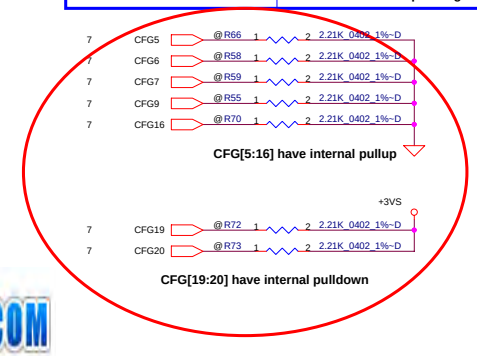

Security Classification	Compal Secret Data		
Issued Date	2006/02/13	Deciphered Date	2006/03/10

Compal Electronics, Inc.

Title: Cantiga(3/6)-VGA/LVDS/TV

Size: Custom | Document Number: LA-4841P | Rev: 1.0

Date: Monday, December 15, 2008 | Sheet 9 of 45

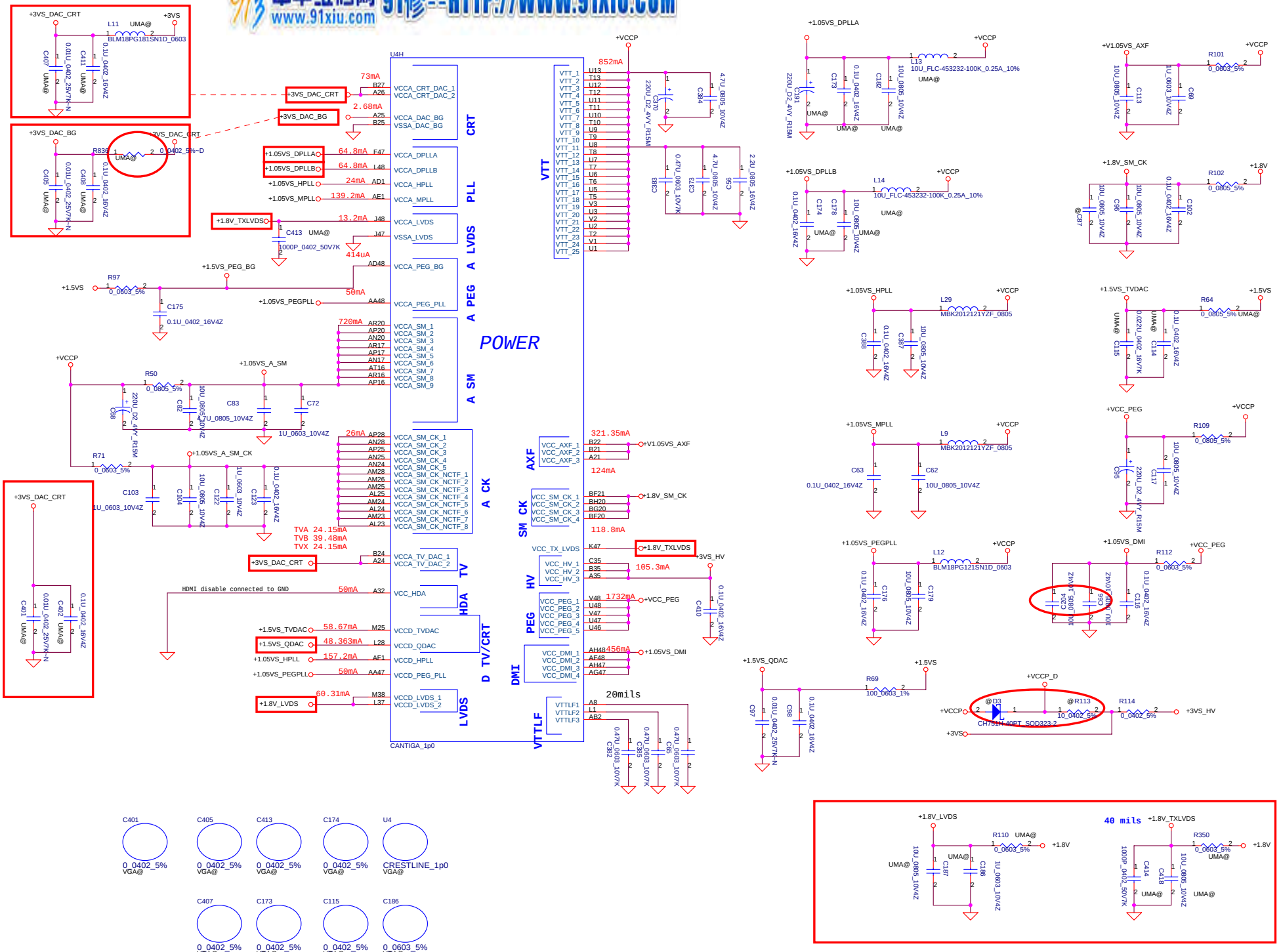

Security Classification	Compal Secret Data		
Issued Date	2006/02/13	Deciphered Date	2006/03/10

Compal Electronics, Inc.

Title: **Cantiga(4/6)-PWR**

Size: Custom | Document Number: **LA-4841P** | Rev: 1.0

Date: Monday, December 15, 2008 | Sheet 10 of 45

Extnal Graphic: 1210.34mA
integrated Graphic: 1930.4mA

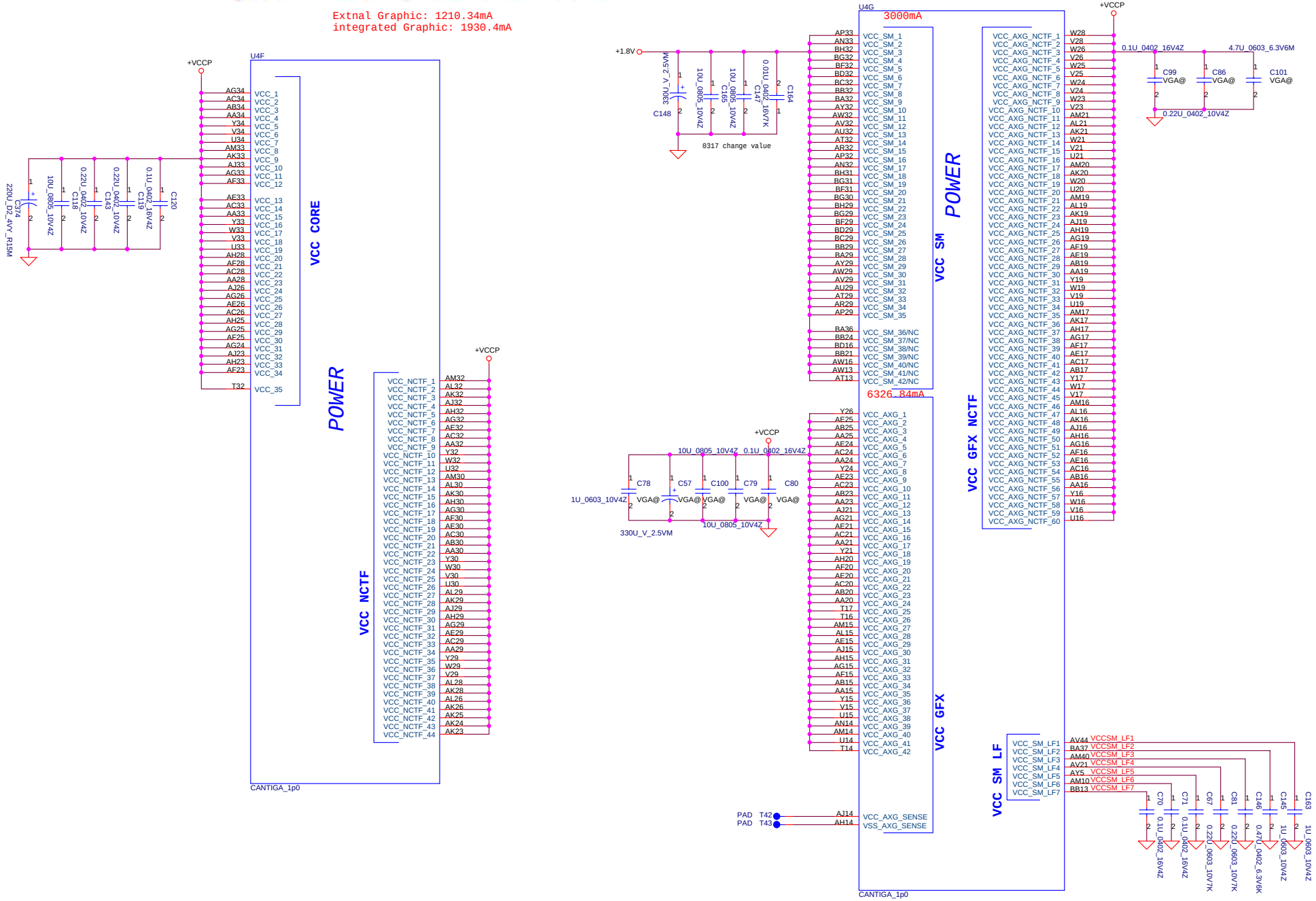

Security Classification	Compal Secret Data		
Issued Date	2006/02/13	Deciphered Date	2006/03/10

Compal Electronics, Inc.

Title: **Cantiga(5/6)-PWR/GND**

Size: Custom | Document Number: **LA-4841P** | Rev: 1.0

Date: Monday, December 15, 2008 | Sheet 11 of 45

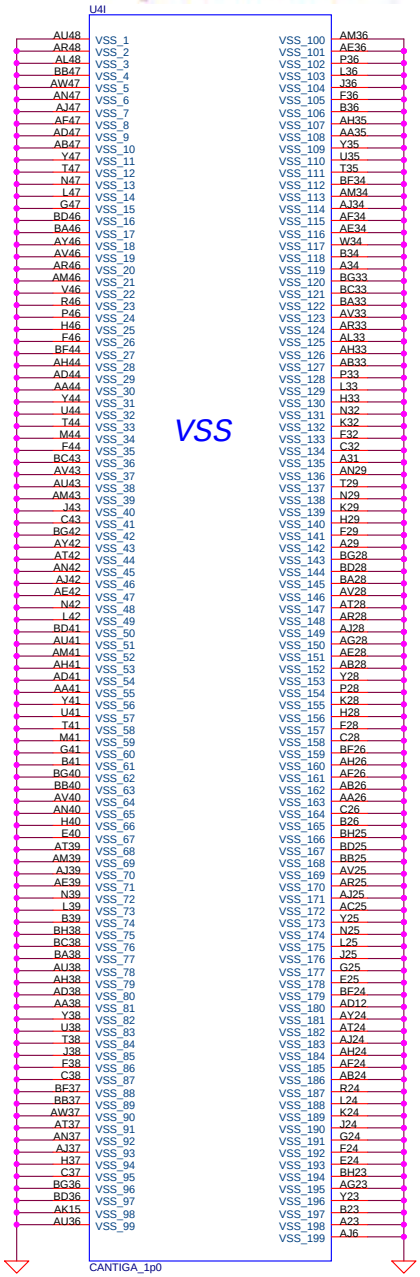

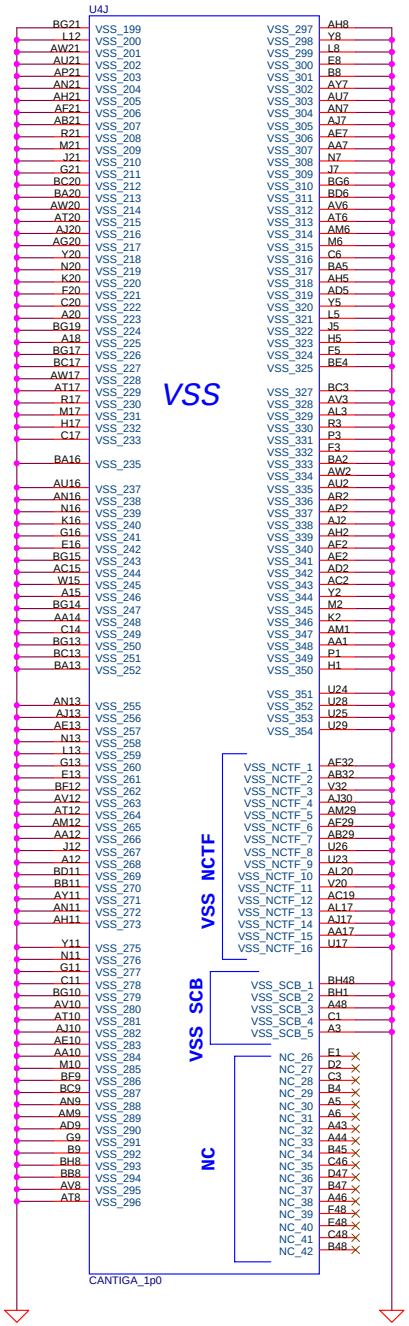

Security Classification	Compal Secret Data		
Issued Date	2006/02/13	Deciphered Date	2006/03/10

Compal Electronics, Inc.

Title: **Cantiga(6/6)-PWR/GND**

Size: Custom | Document Number: **LA-4841P** | Rev: 1.0

Date: Monday, December 15, 2008 | Sheet 12 of 45

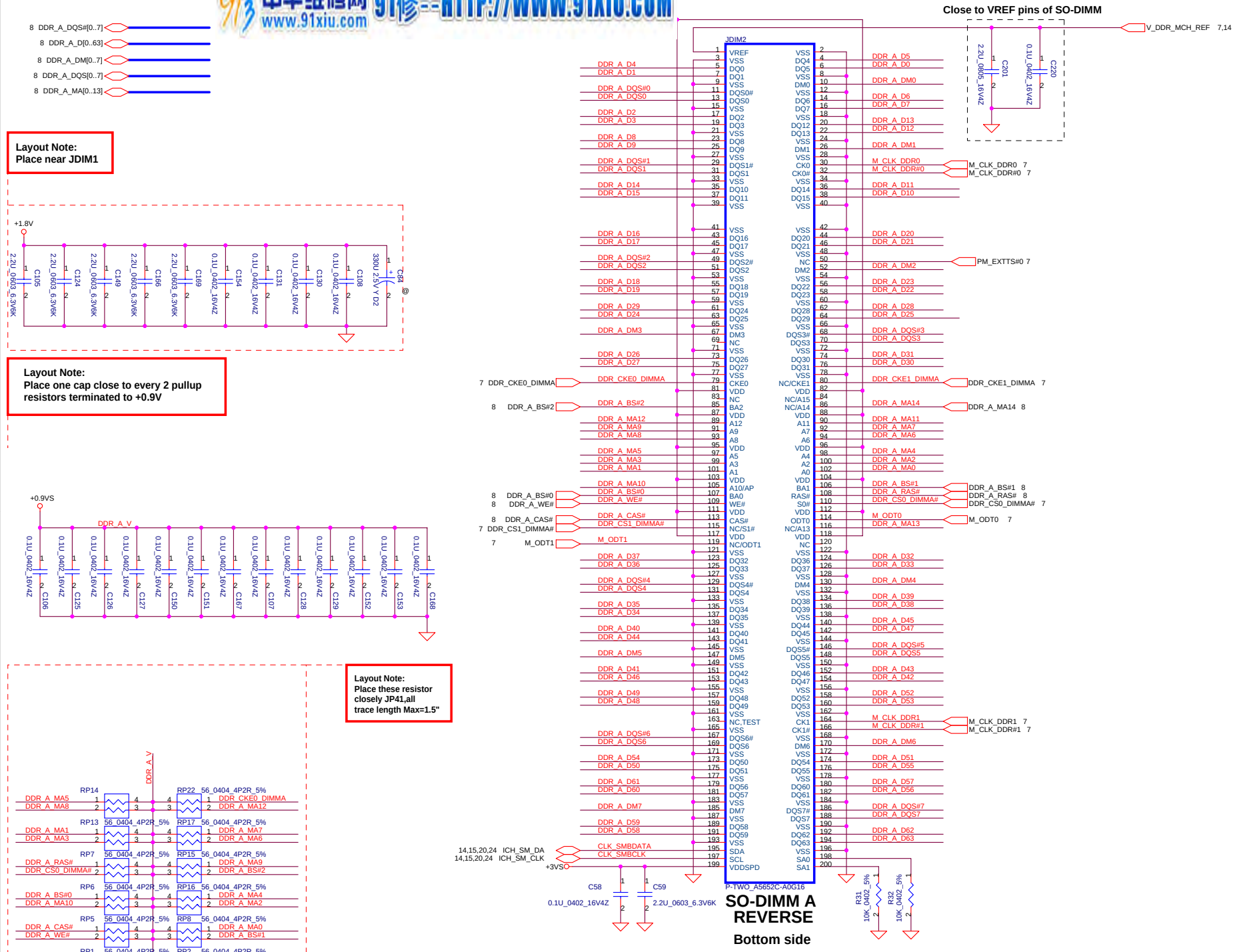

Security Classification	Compal Secret Data			Compal Electronics, Inc.
Issued Date	2007/1/15	Deciphered Date	2008/1/15	Title: DDR2 SO-DIMM I
				Size: Custom; Document Number: LA-4841P; Rev: 1.0
				Date: Monday, December 15, 2008; Sheet 13 of 45

8 DDR_B_DQS#[0..7]
8 DDR_B_D[0..63]
8 DDR_B_DM[0..7]
8 DDR_B_DQS[0..7]
8 DDR_B_MA[0..13]

Layout Note:
Place near JDIM2

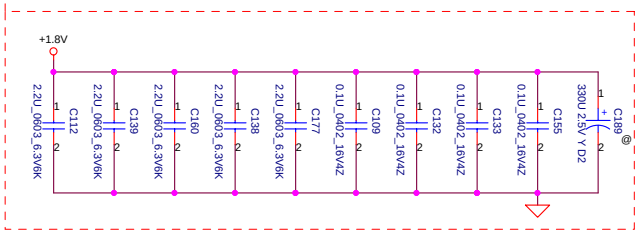

Layout Note:
Place one cap close to every 2 pullup resistors terminated to +0.9VS

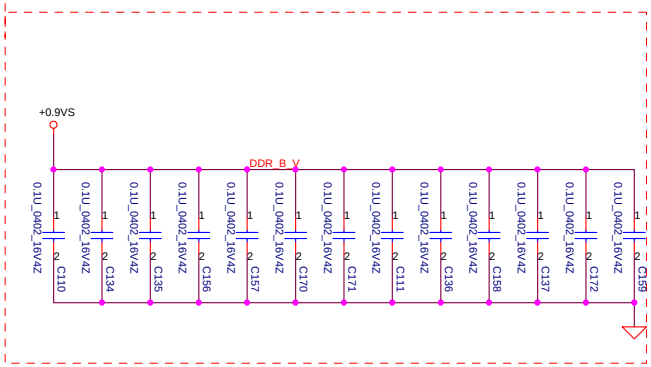

Layout Note:
Place these resistor closely JP42,all trace length Max=1.5"

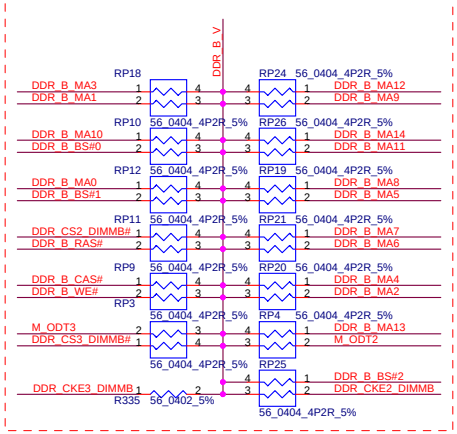

Close to VREF pins of SO-DIMM

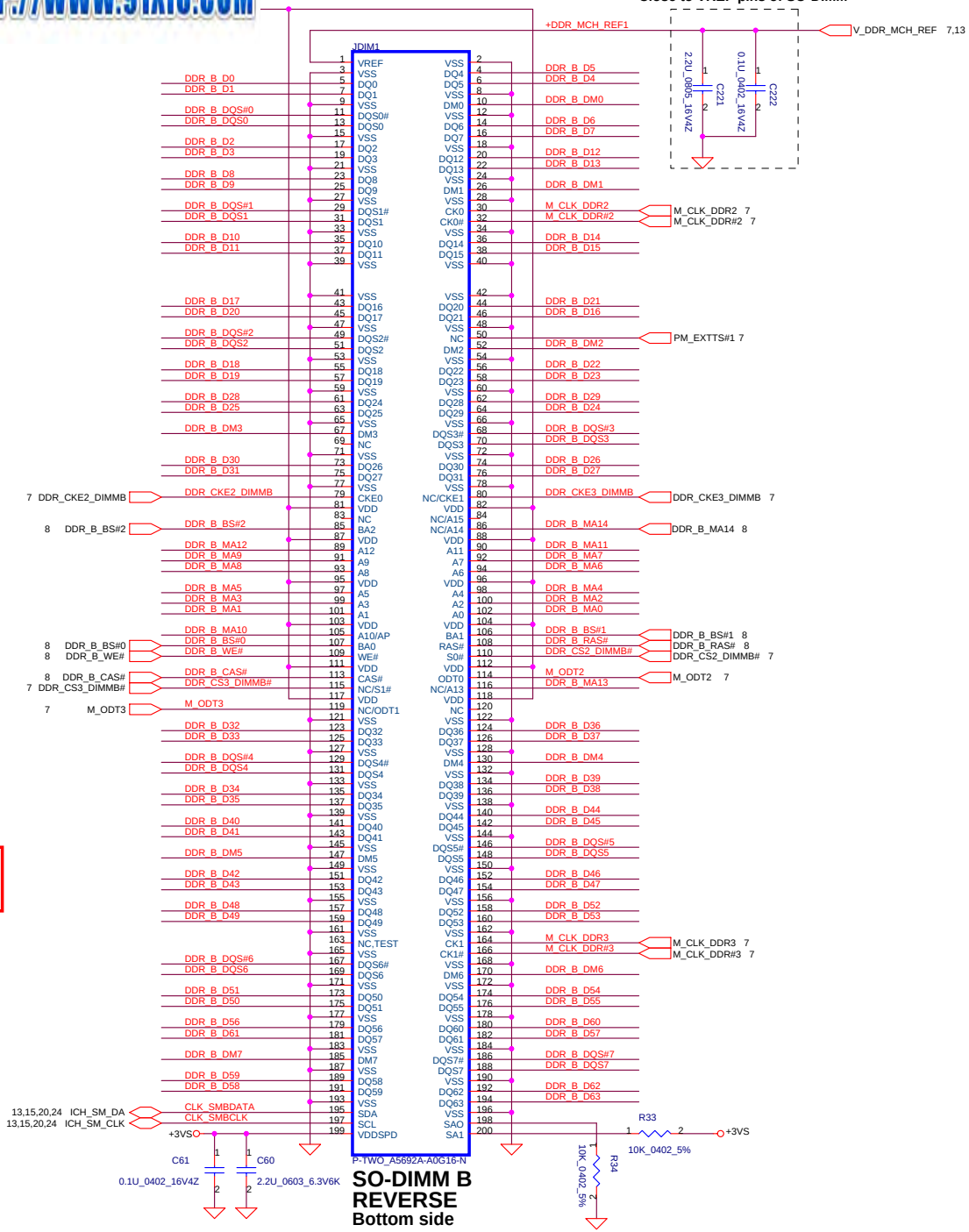

SO-DIMM B
REVERSE
Bottom side

Security Classification	Compal Secret Data			Compal Electronics, Inc.
Issued Date	2007/1/15	Deciphered Date	2008/1/15	Title: DDR2 SO-DIMM II
				Size: Custom; Document Number: LA-4841P; Rev: 1.0
				Date: Monday, December 15, 2008; Sheet 14 of 45

FSC CLKSEL2	FSB CLKSEL1	FSA CLKSEL0	CPU MHz	SRC MHz	PCI MHz	REF MHz	DOT_96 MHz	USB MHz
0	0	0	266	100	33.3	14.318	96.0	48.0
0	0	1	133	100	33.3	14.318	96.0	48.0
0	1	0	200	100	33.3	14.318	96.0	48.0
0	1	1	166	100	33.3	14.318	96.0	48.0
1	0	0	333	100	33.3	14.318	96.0	48.0
1	0	1	100	100	33.3	14.318	96.0	48.0
1	1	0	400	100	33.3	14.318	96.0	48.0
1	1	1	Reserved					

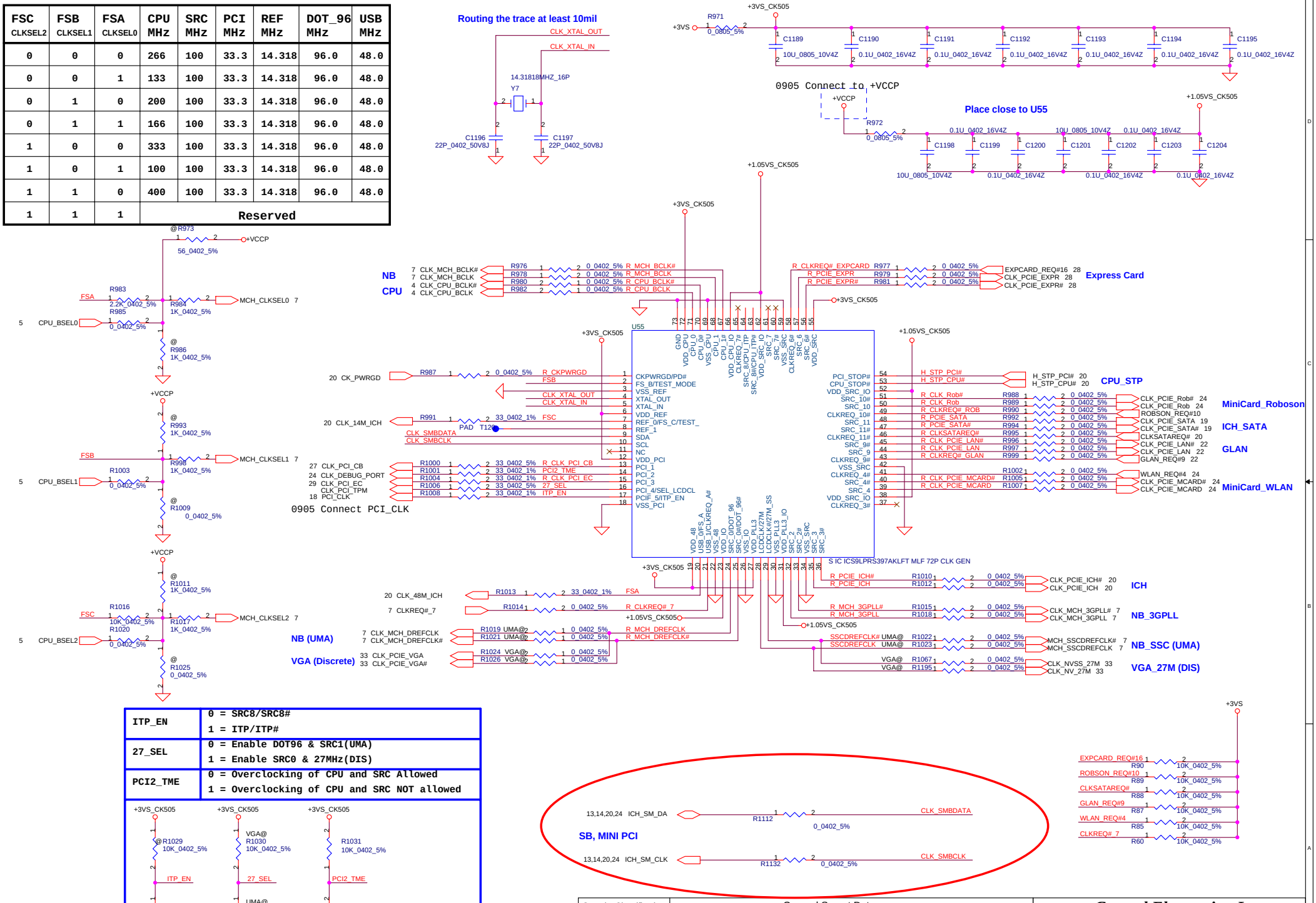

ITP_EN	0 = SRC8/SRC8# 1 = ITP/ITP#
27_SEL	0 = Enable DOT96 & SRC1(UMA) 1 = Enable SRC0 & 27MHz(DIS)
PCI2_TME	0 = Overclocking of CPU and SRC Allowed 1 = Overclocking of CPU and SRC NOT allowed

Security Classification	Compal Secret Data		
Issued Date	2006/02/13	Deciphered Date	2006/03/10

Compal Electronics, Inc.

Title: Clock Generator CK505

Size: B | Document Number: LA-4841P | Rev: 1.0

Date: Monday, December 15, 2008 | Sheet 15 of 45

JEPICO Conn.

L C D

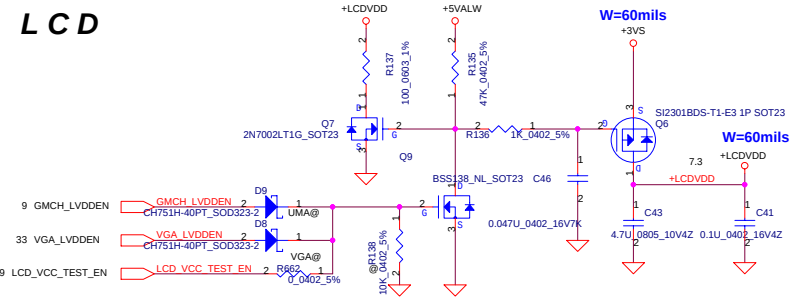

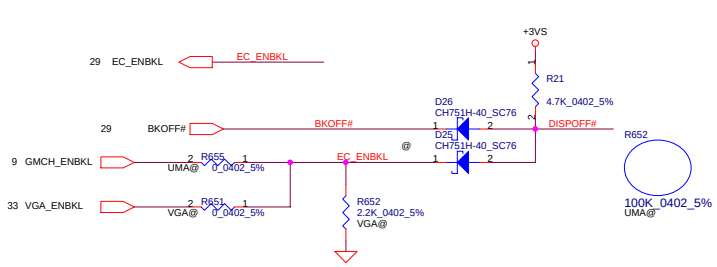

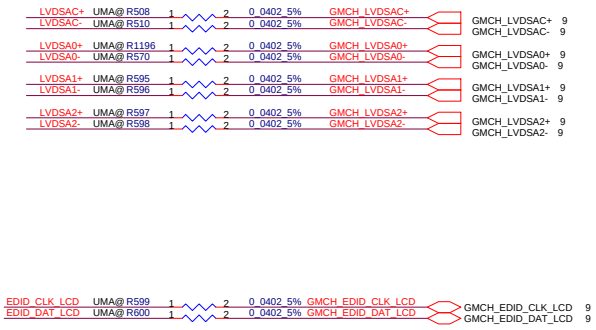

Routing Diagram

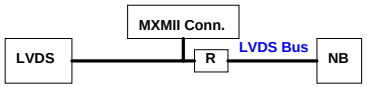

Use Daisy chain to route

LCD/PANEL BD. Conn.

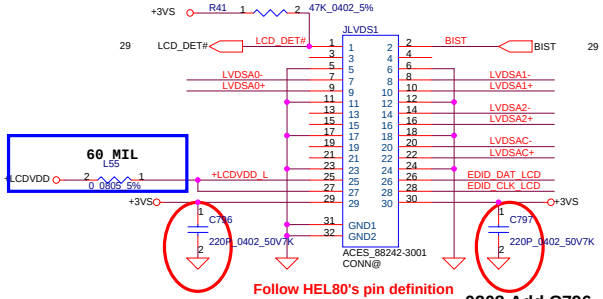

Follow HEL80's pin definition
Except pin 29

0208 Add C796 , C797 for EMI

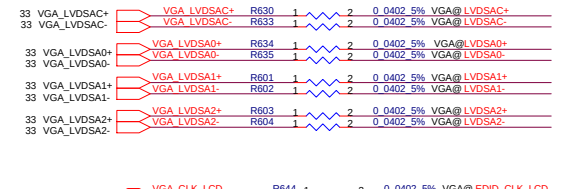

INVERTER Conn.

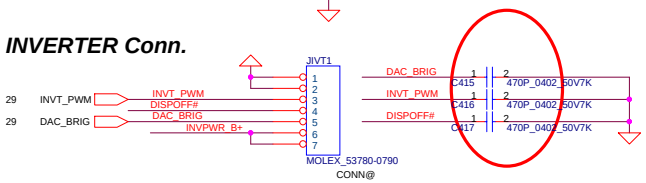

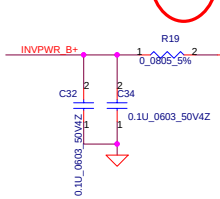

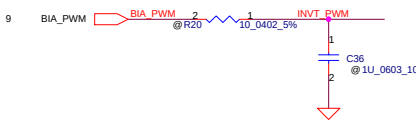

Security Classification	Compal Secret Data		
Issued Date	2007/1/15	Deciphered Date	2008/1/15

Compal Electronics, Inc.

Title: CRT CONN/LCD CONN

Size: Custom | Document Number: LA-4841P | Rev: 1.0

Date: Monday, December 15, 2008 | Sheet 16 of 45

CRT

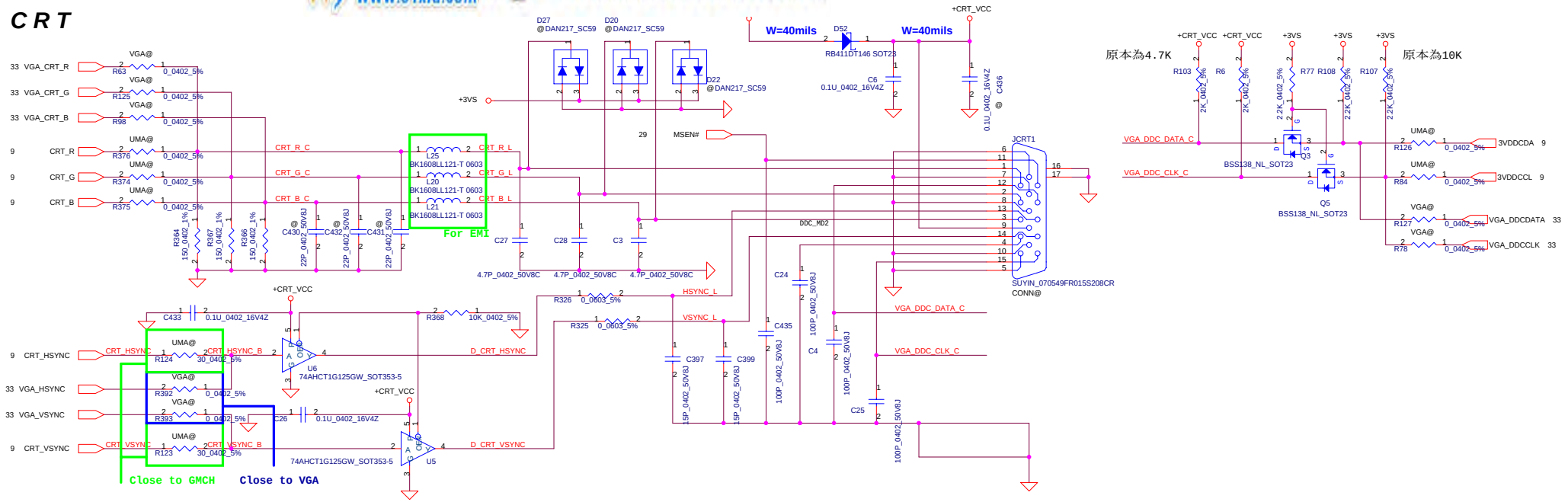

Title	<Title>
Size	Document Number
Custom	LA-4841P
Rev	1.0
Date:	Monday, December 15, 2008
Sheet	17 of 45

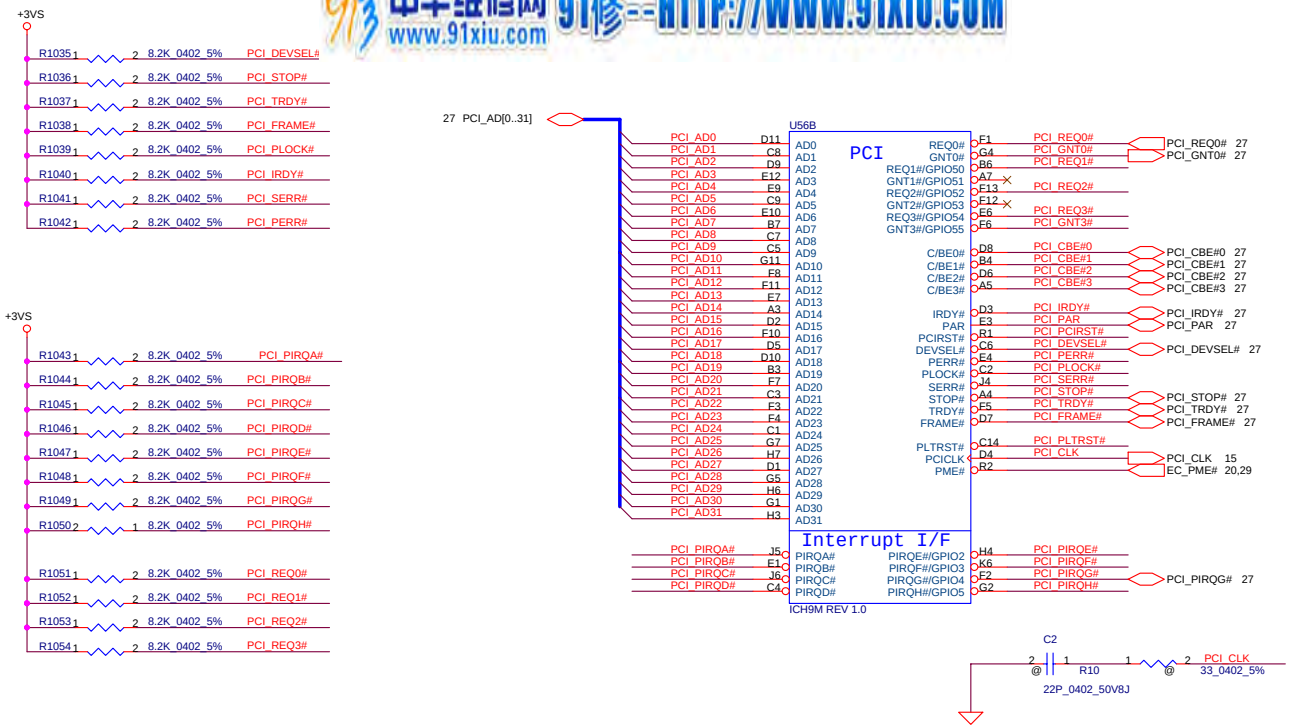

A16 swap override Strap	
PCI_GNT3#	Low= A16 swap override Enble High= Default*

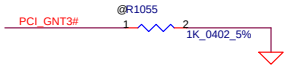

Boot BIOS Strap		
PCI_GNT0#	SPI_CS#1	Boot BIOS Location
0	1	SPI
1	0	PCI
1	1	LPC *

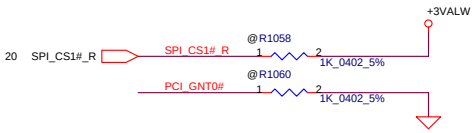

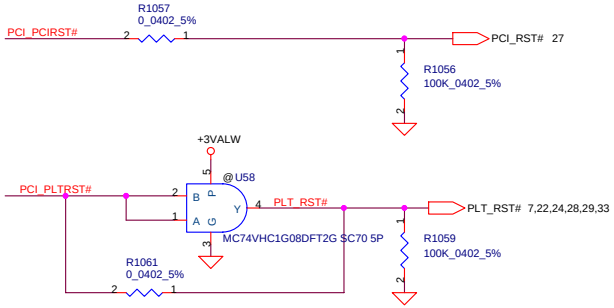

Security Classification	Compal Secret Data		
Issued Date	2006/02/13	Deciphered Date	2006/03/10

Compal Electronics, Inc.

Title: ICH9(1/4)-PCI/INT

Size: B | Document Number: LA-4841P | Rev: 1.0

Date: Monday, December 15, 2008 | Sheet 18 of 45

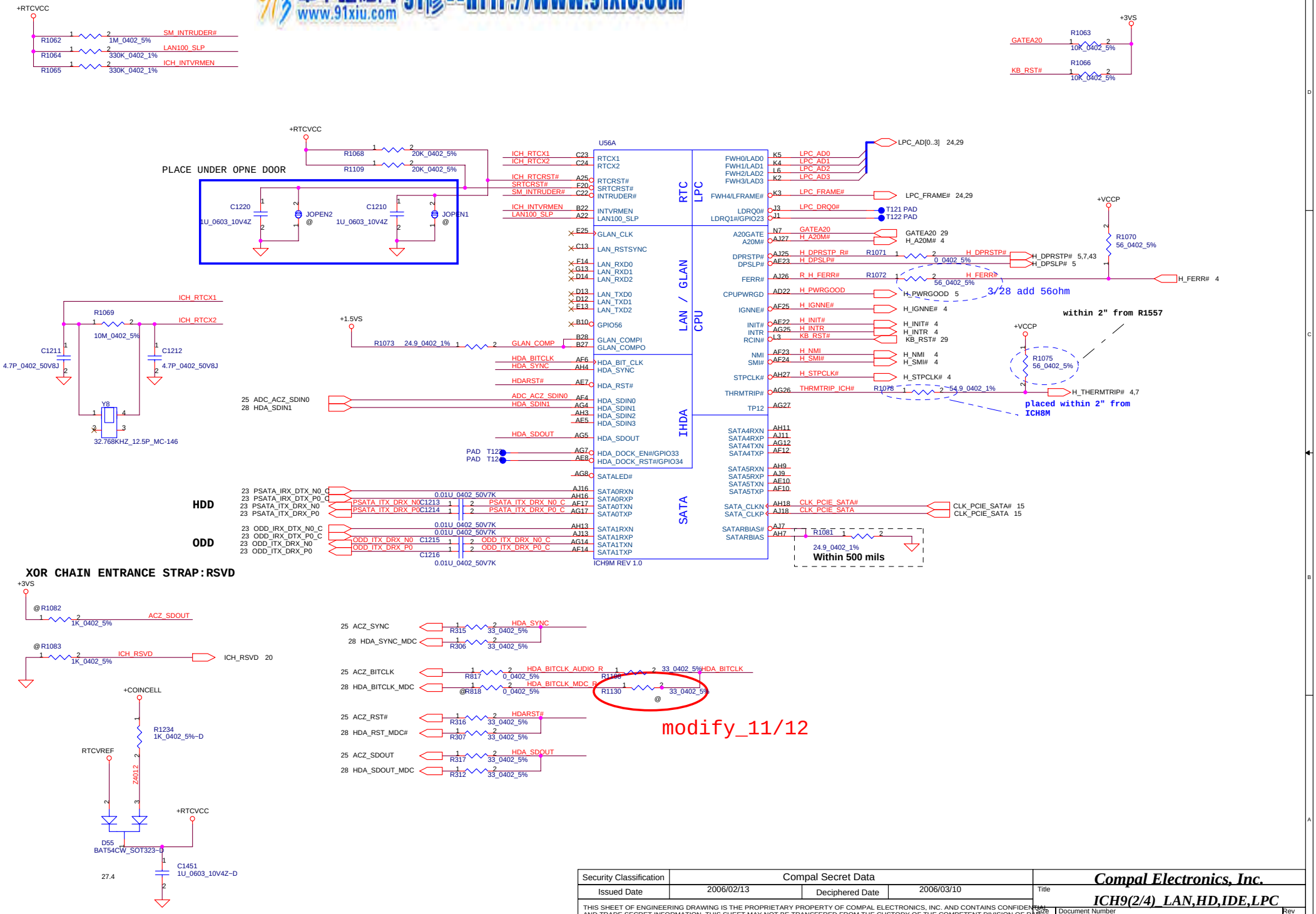

Security Classification	Compal Secret Data		
Issued Date	2006/02/13	Deciphered Date	2006/03/10

Compal Electronics, Inc.

Title: ICH9(2/4)_LAN,HD,IDE,LPC

Size: Custom | Document Number: LA-4841P | Rev: 1.0

Date: Monday, December 15, 2008 | Sheet 19 of 45

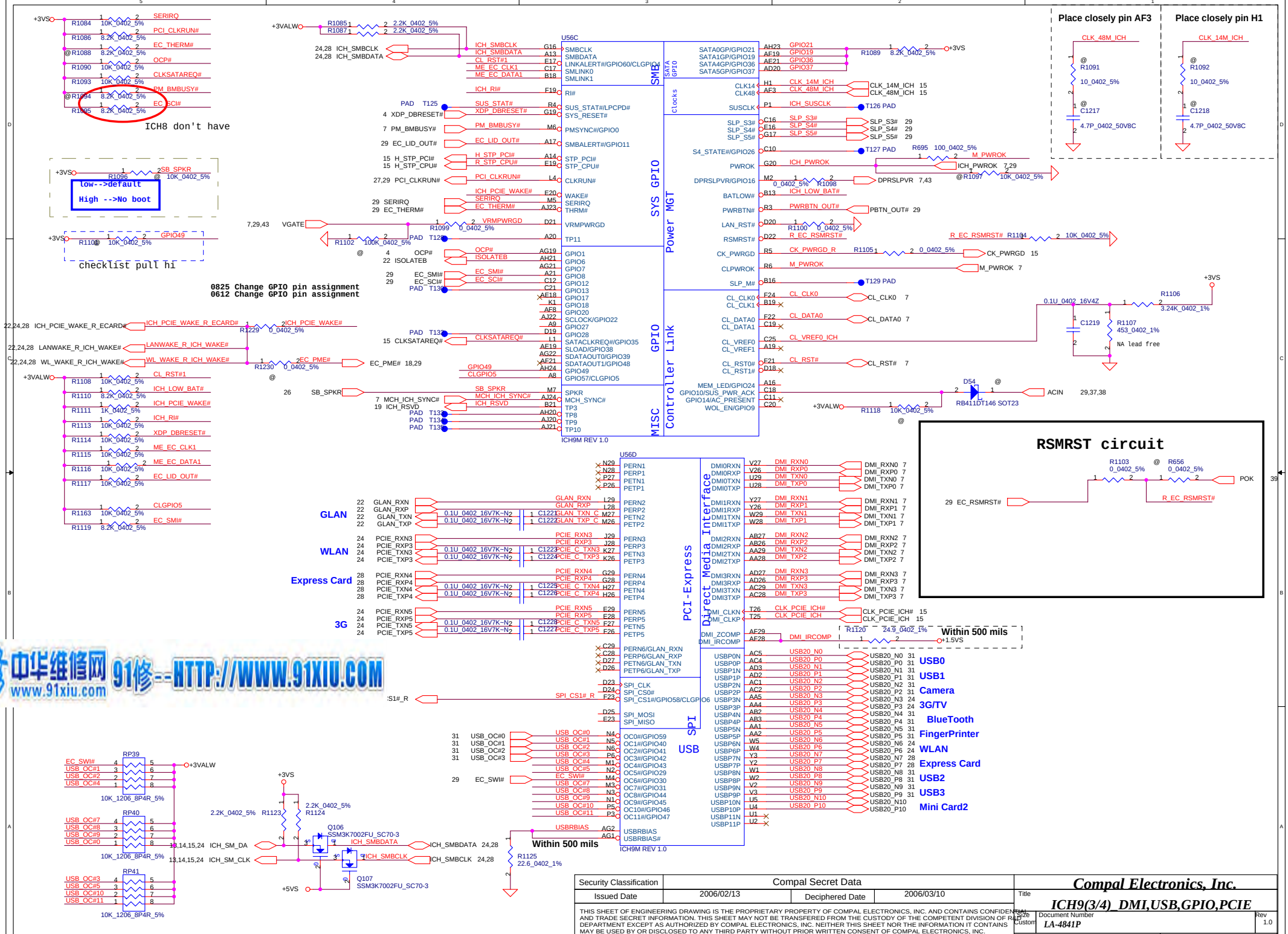

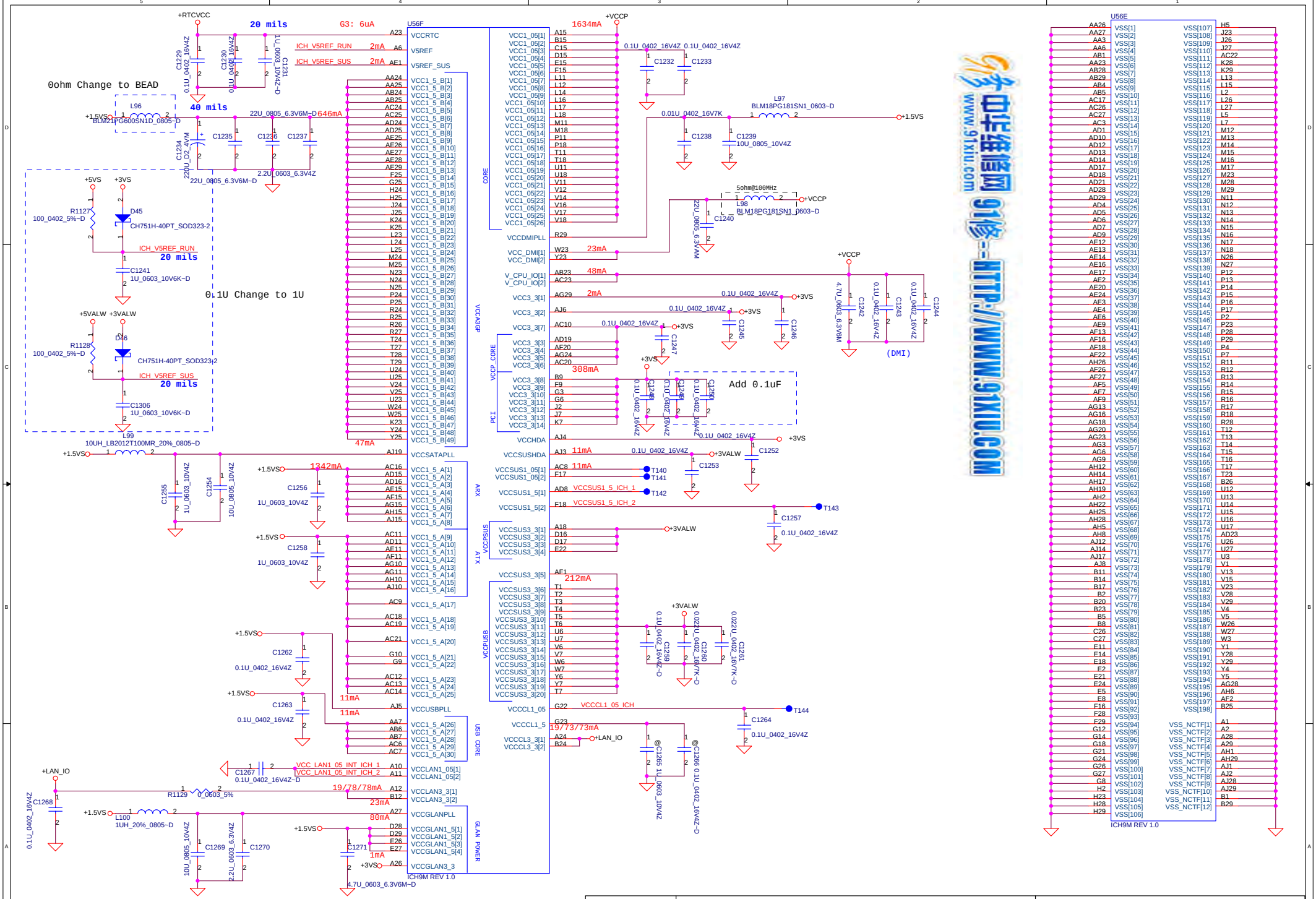

Security Classification	Compal Secret Data		
Issued Date	2006/02/13	Deciphered Date	2006/03/10

Compal Electronics, Inc.

Title: ICH9(4/4)_POWER&GND

Size: Custom | Document Number: LA-4841P | Rev: 1.0

Date: Monday, December 15, 2008 | Sheet 21 of 45

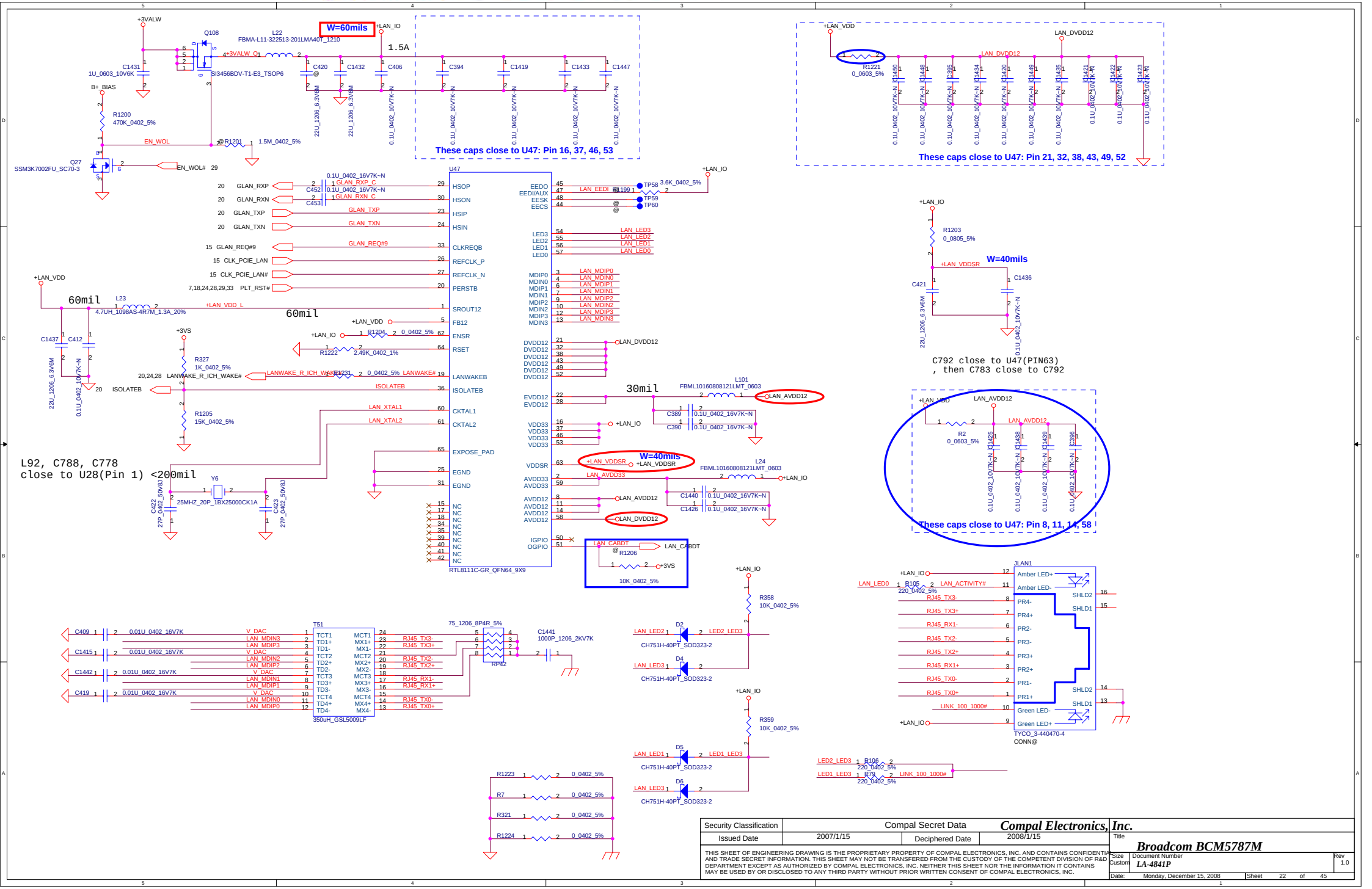

Security Classification	Compal Secret Data		Compal Electronics, Inc.
Issued Date	2007/1/15	Deciphered Date	2008/1/15

Title: **Broadcom BCM5787M**

Size	Document Number	Rev
Custom	LA-4841P	1.0

Date: Monday, December 15, 2008 | Sheet 22 of 45

SATA HDD CONN

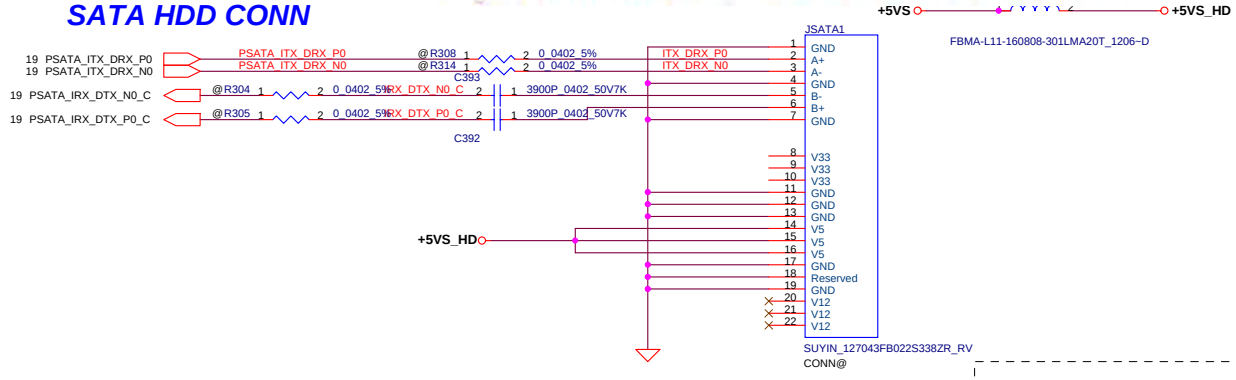

SATA ODD CONN

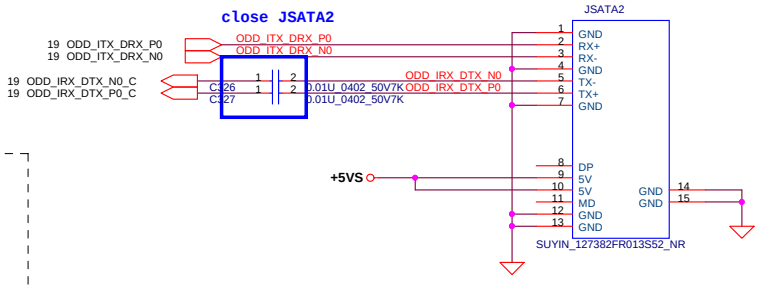

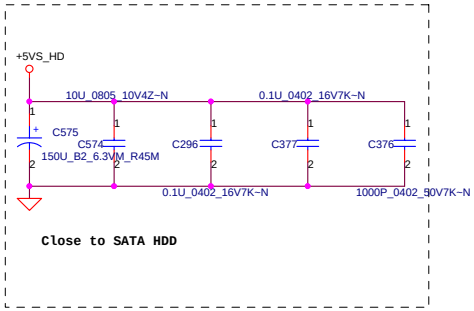

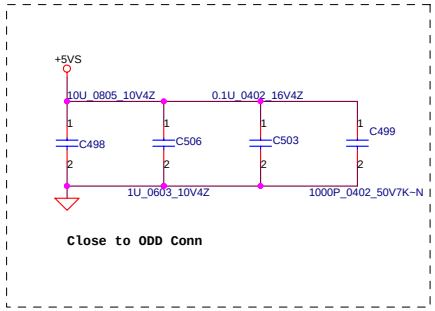

Output Swing Control

	SEL2_ [A:B]	Swing
*	0	1x
	1	1.2x

Output De-emphasis Adjustment

	SEL3_ [A:B]	De-emphasis
*	0	0dB
	1	-3.5dB

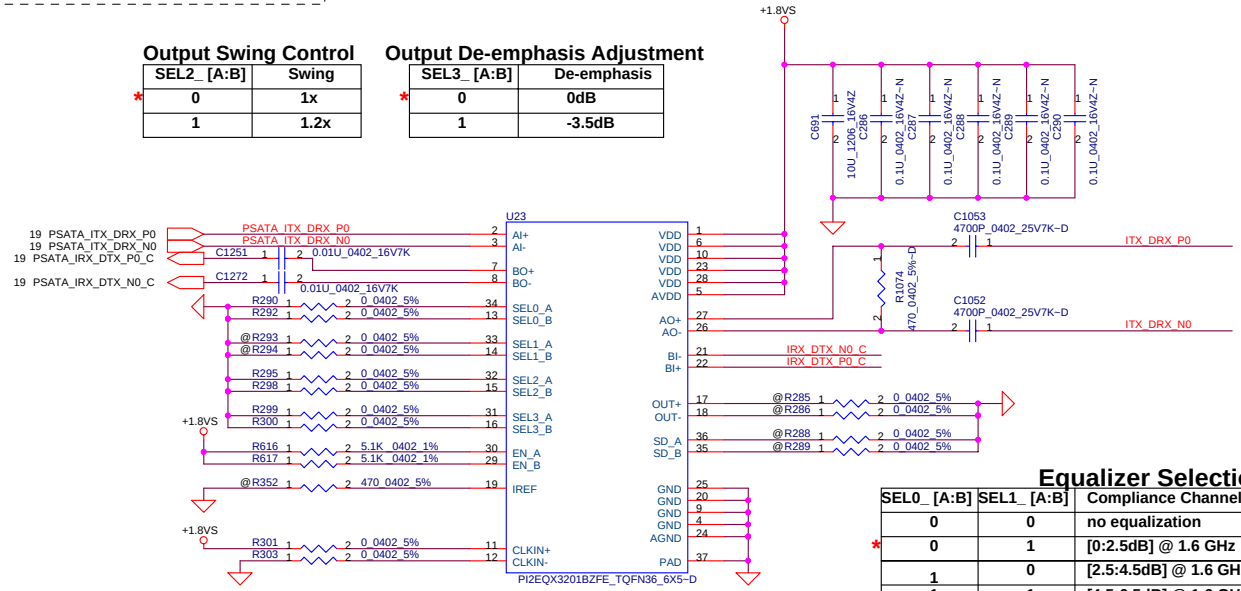

Equalizer Selection

	SEL0_ [A:B]	SEL1_ [A:B]	Compliance Channel
	0	0	no equalization
*	0	1	[0:2.5dB] @ 1.6 GHz
	1	0	[2.5:4.5dB] @ 1.6 GHz
	1	1	[4.5:6.5dB] @ 1.6 GHz

Security Classification	Compal Secret Data		Compal Electronics, Inc.
Issued Date	2007/1/15	Deciphered Date 2008/1/15	Title HDD/CDROM

Size Custom	Document Number LA-4841P	Rev 1.0
Date: Monday, December 15, 2008	Sheet 23 of 45	

Mini-Express Card for 3G or TV Tuner

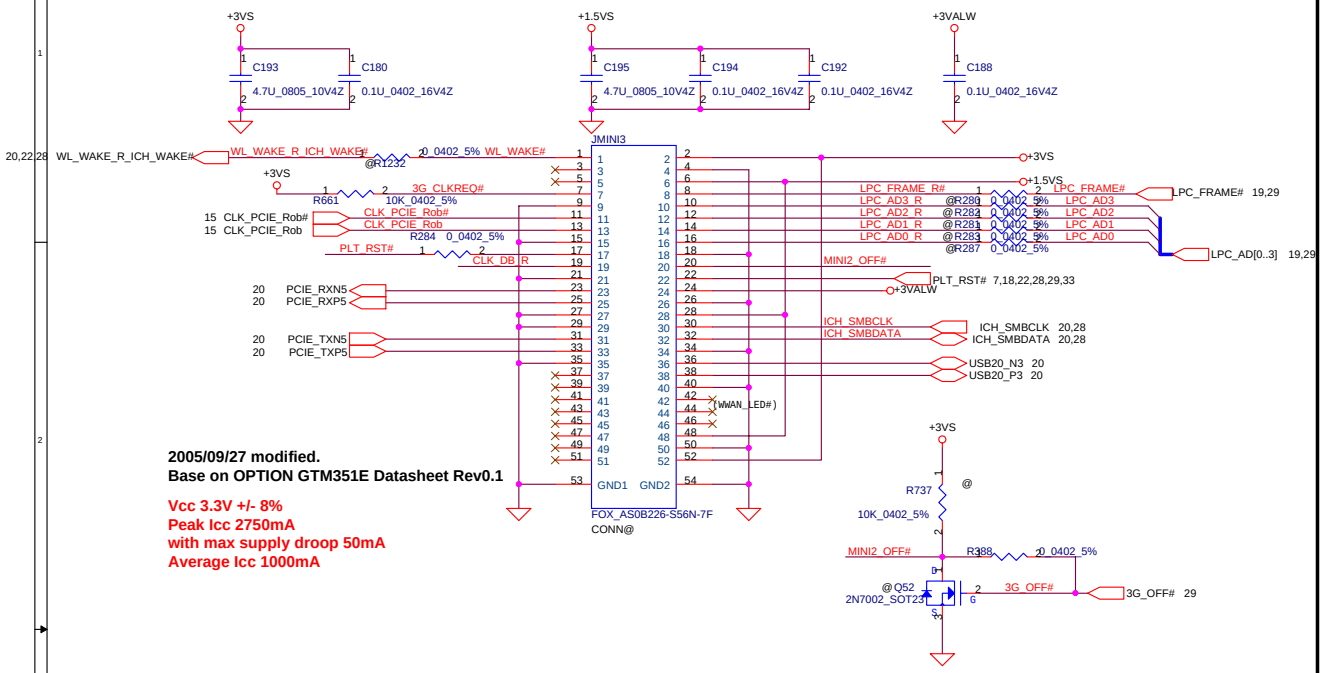

2005/09/27 modified.
Base on OPTION GTM351E Datasheet Rev0.1

Vcc 3.3V +/- 8%
Peak Icc 2750mA
with max supply droop 50mA
Average Icc 1000mA

Mini-Express Card---WLAN

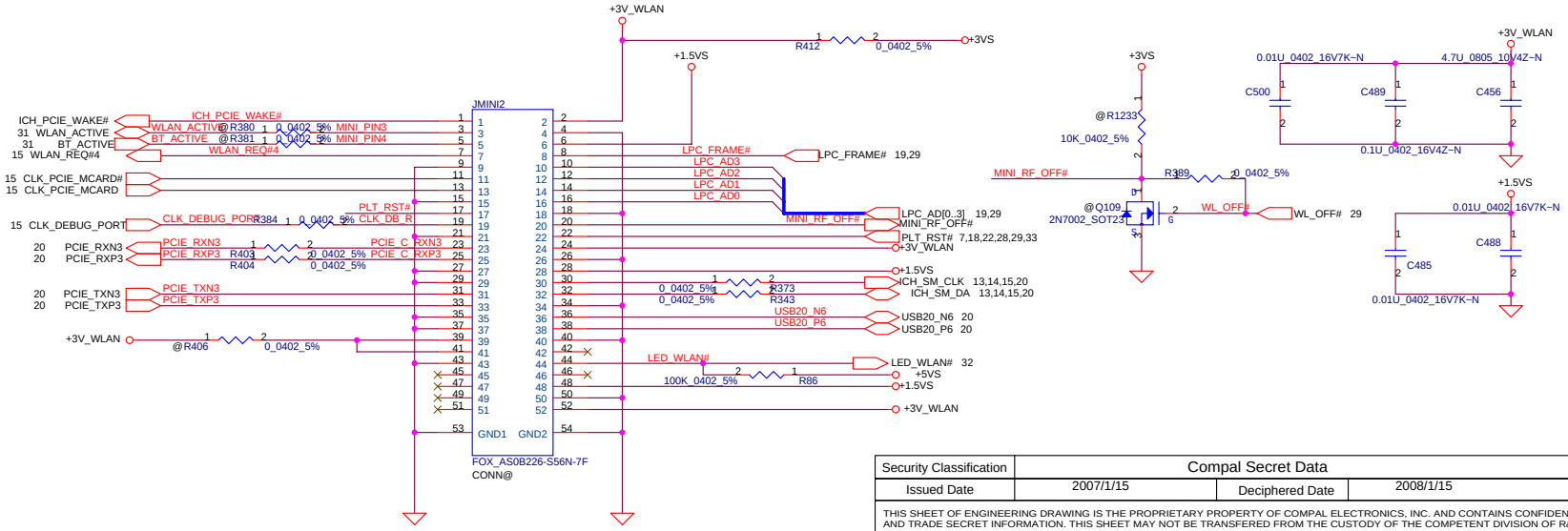

Security Classification	Compal Secret Data		
Issued Date	2007/1/15	Deciphered Date	2008/1/15

Compal Electronics, Inc.

Title: **Mini-Card/LED**

Size: Custom | Document Number: **LA-4841P** | Rev: 1.0

Date: Monday, December 15, 2008 | Sheet 24 of 45

HD Audio Codec

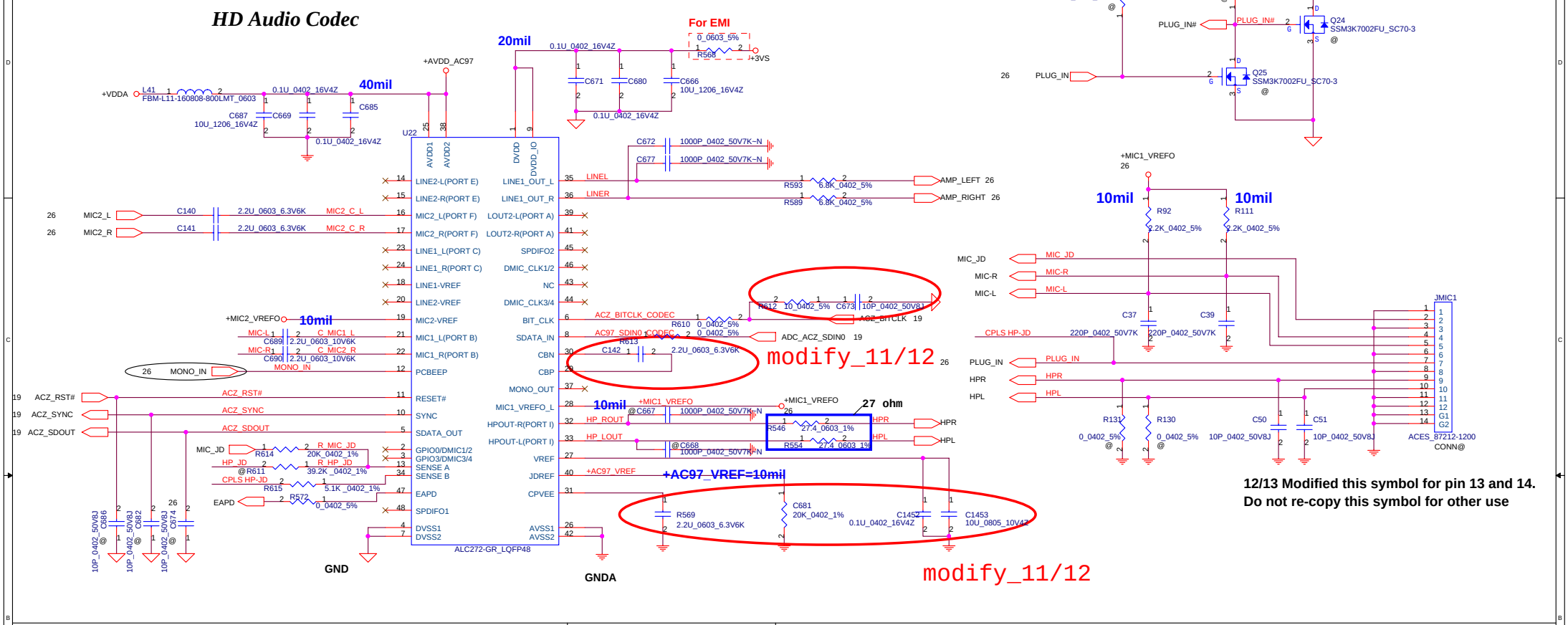

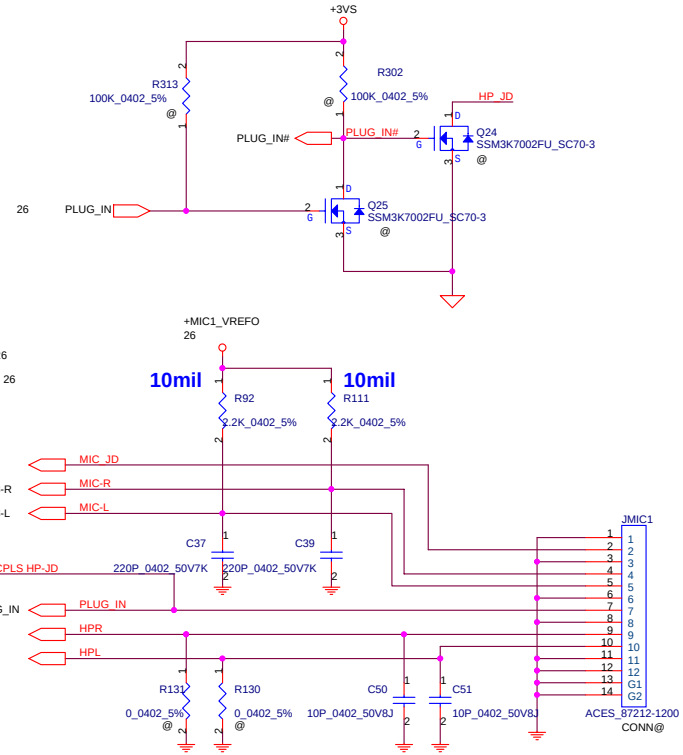

12/13 Modified this symbol for pin 13 and 14.
Do not re-copy this symbol for other use

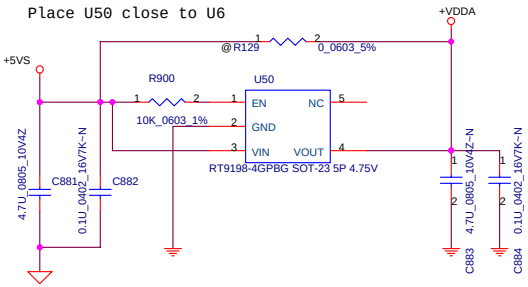

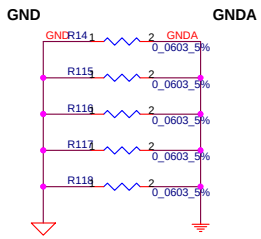

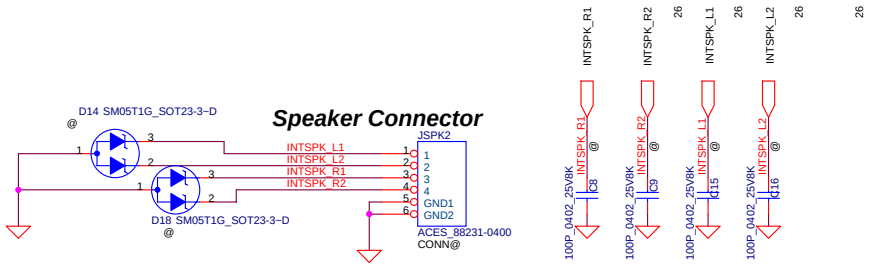

Security Classification	Compal Secret Data		
Issued Date	2008/05/07	Deciphered Date	2009/05/07

Compal Electronics, Inc.

Title: HD CODEC 92HD81

Size: A3/26 | Document Number: LA-4841P | Rev: 1.0

Date: Monday, December 15, 2008 | Sheet 25 of 45

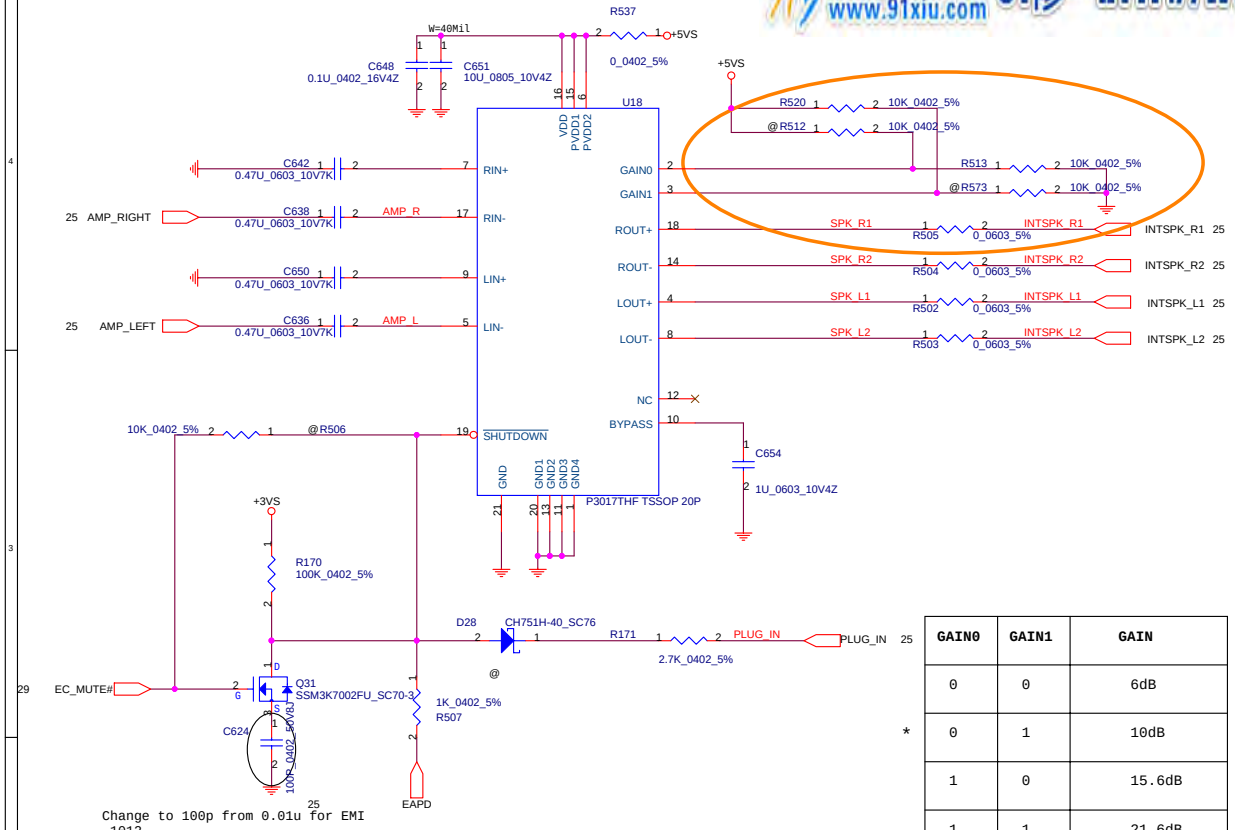

Change to 100p from 0.01u for EMI -1012

Buzzer need to support ICH/PCM_SPK/Battery_low and WL_on/off

	GAIN0	GAIN1	GAIN
	0	0	6dB
*	0	1	10dB
	1	0	15.6dB
	1	1	21.6dB

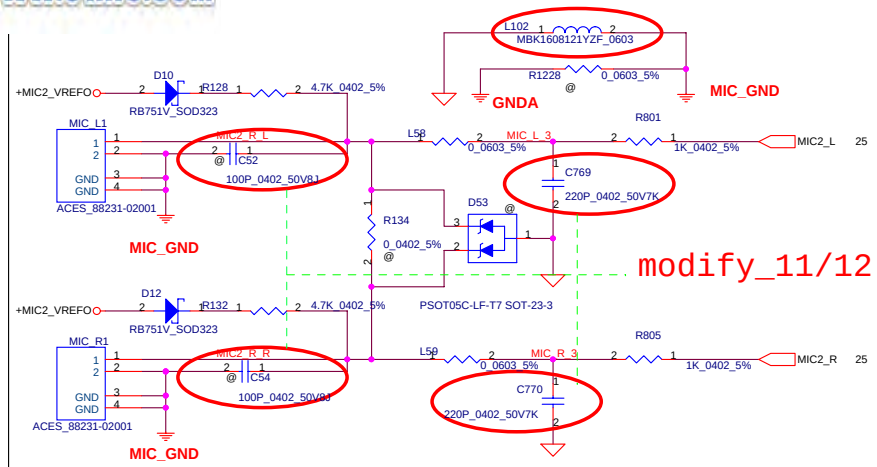

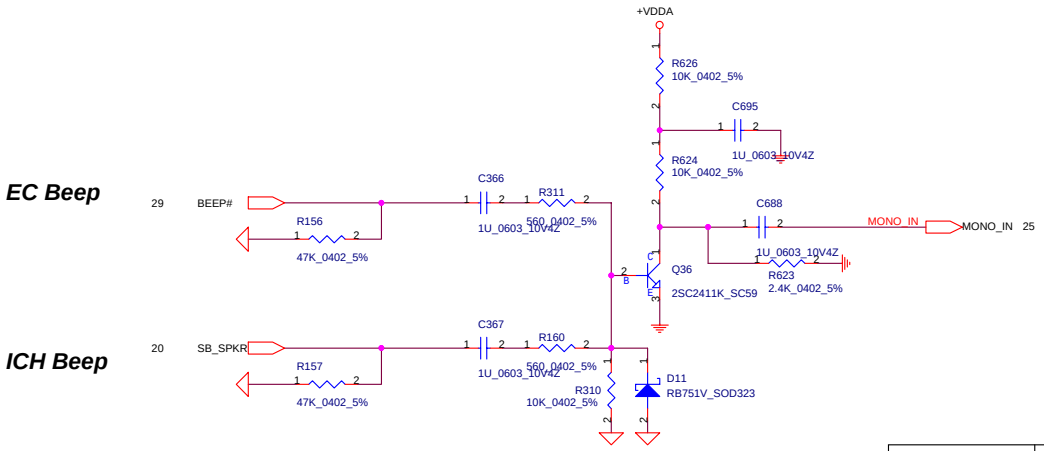

Security Classification	Compal Secret Data		
Issued Date	2007/1/15	Deciphered Date	2008/1/15

Compal Electronics, Inc.

Title: AMP/Audio Jack

Size: Custom | Document Number: LA-4121P | Rev: 1.0

Date: Monday, December 15, 2008 | Sheet 26 of 45

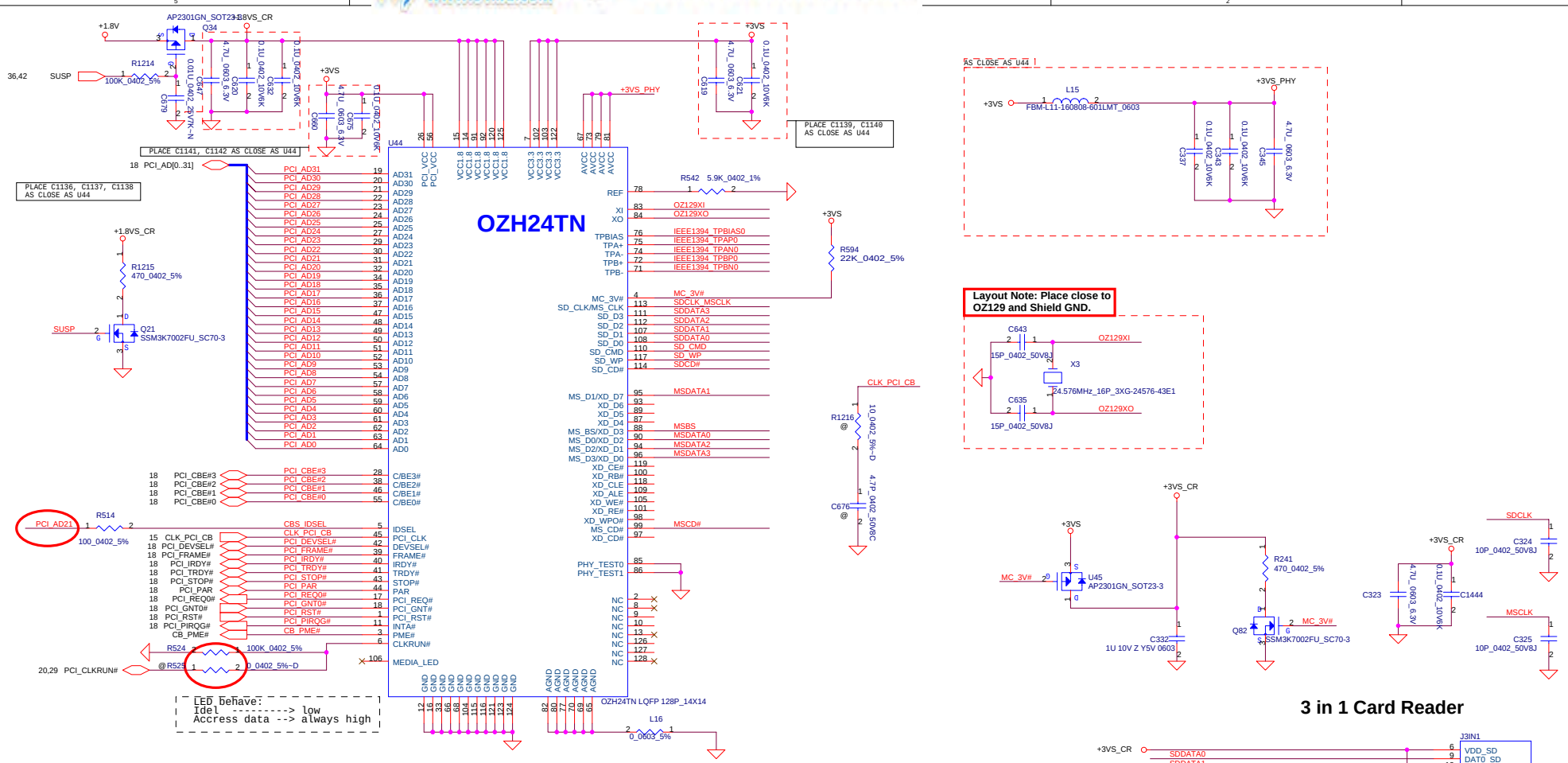

Security Classification	Compal Secret Data		
Issued Date	2007/09/01	Deciphered Date	2008/09/01

Compal Electronics, Inc.

Title: **OZ129_Card Reader / 1394**

Size: Custom | Document Number: **LA-4841P** | Rev: 1.0

Date: Monday, December 15, 2008 | Sheet 27 of 45

Express card

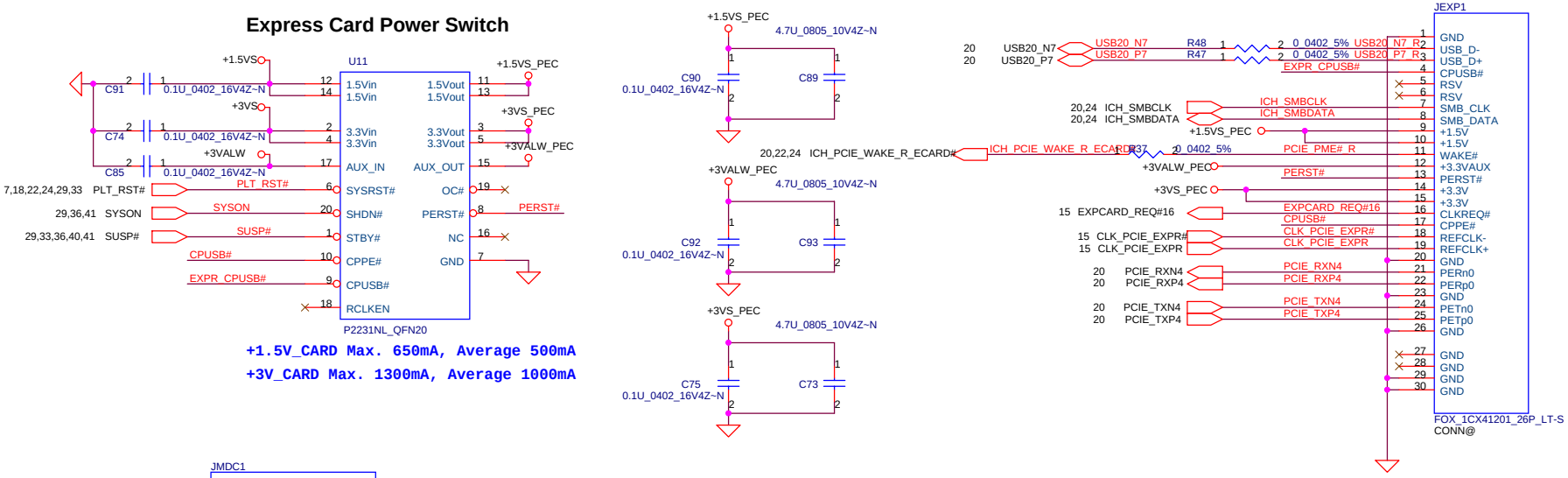

MDC Conn.

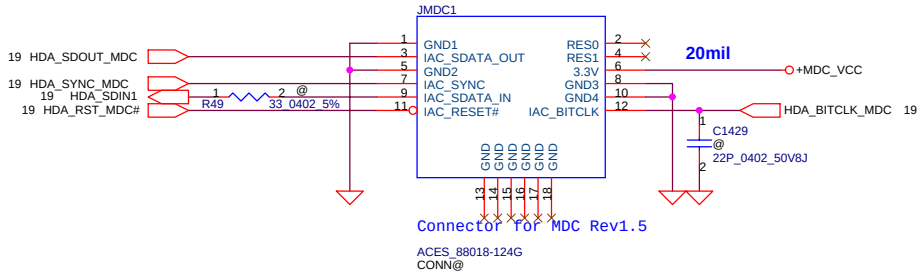

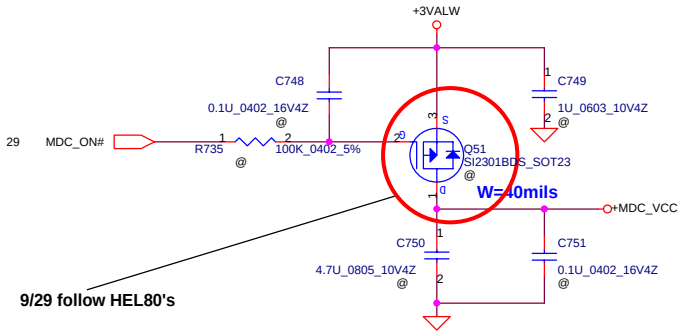

Security Classification	Compal Secret Data			Compal Electronics, Inc.
Issued Date	2007/1/15	Deciphered Date	2008/1/15	Title: EXPRESS CARD
				Size: Custom; Document Number: LA-4841P; Rev: 1.0
				Date: Monday, December 15, 2008; Sheet 28 of 45

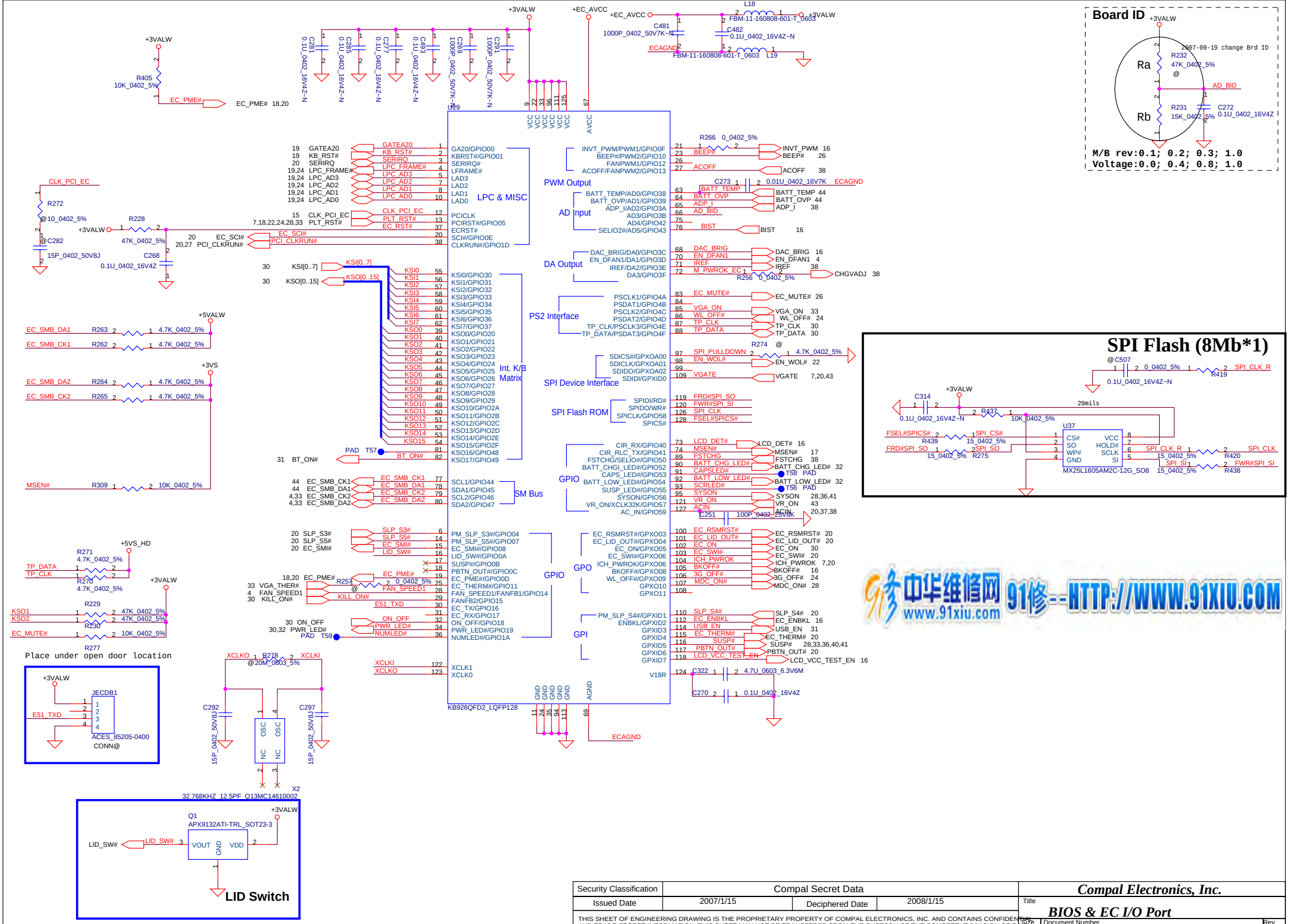

Security Classification	Compal Secret Data			Compal Electronics, Inc.
Issued Date	2007/1/15	Deciphered Date	2008/1/15	Title: BIOS & EC I/O Port

Size	Document Number	Rev
Custom	LA-4841P	1.0

Date: Monday, December 15, 2008 Sheet 29 of 45

Power Button

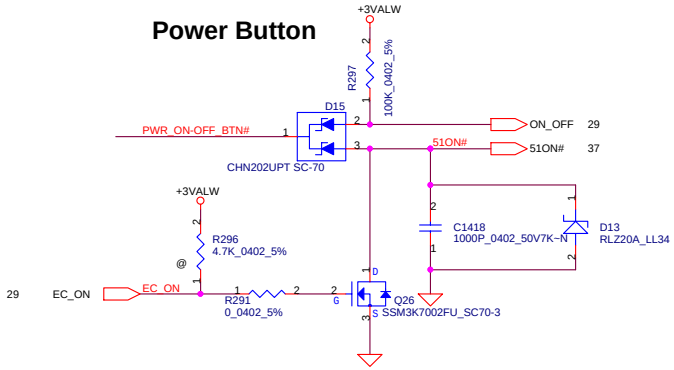

INT_KBD CONN.

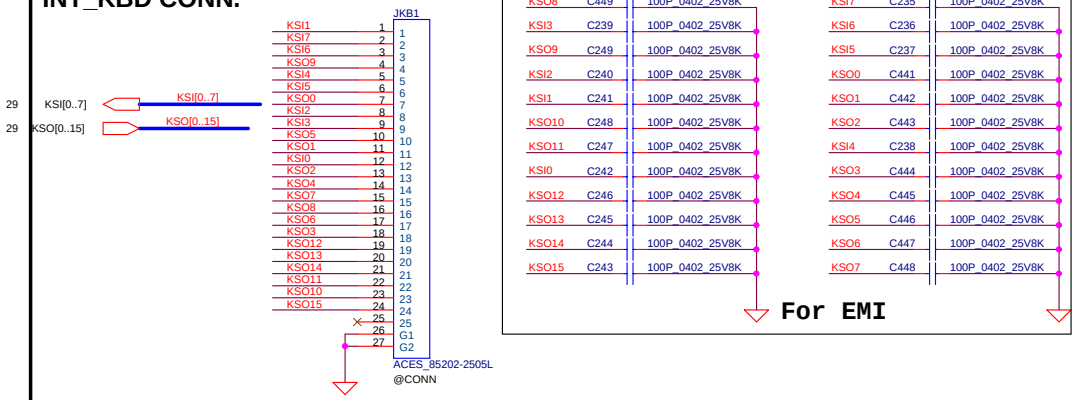

SW/B CONN.

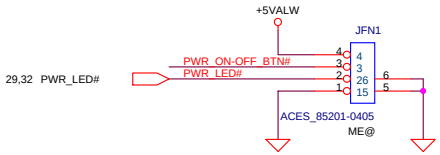

Wireless_SW

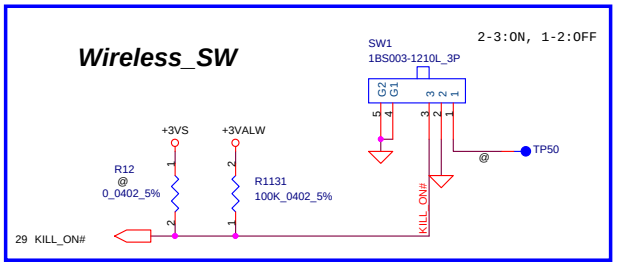

Touch PAD/B CONN.

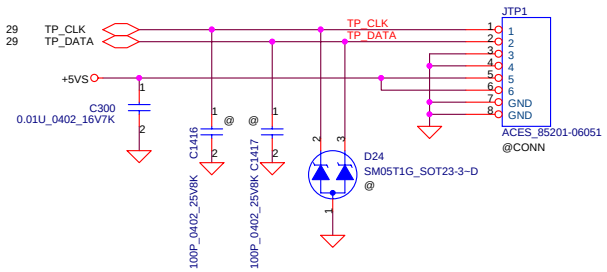

Security Classification	Compal Secret Data			Compal Electronics, Inc.
Issued Date	2007/1/15	Deciphered Date	2008/1/15	Title: PWR_OK/BTN/TP
				Size: Custom; Document Number: LA-4841P; Rev: 1.0
				Date: Monday, December 15, 2008; Sheet 30 of 45

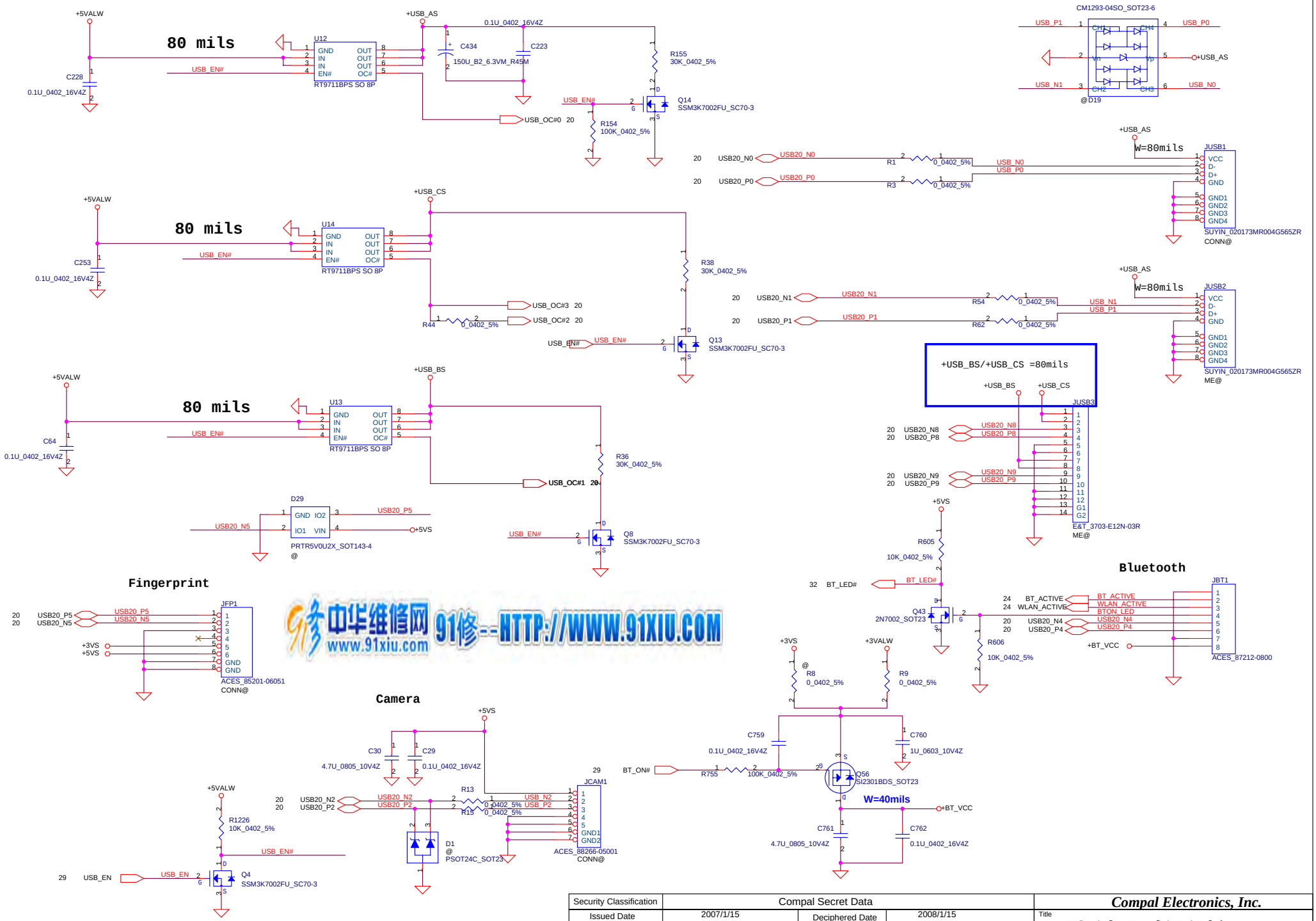

Security Classification	Compal Secret Data		
Issued Date	2007/1/15	Deciphered Date	2008/1/15

Compal Electronics, Inc.

Title: **USB/BlueTooth/FP/Felcia**

Size: Custom | Document Number: **LA-4841P** | Rev: 1.0

Date: Monday, December 15, 2008 | Sheet 31 of 45

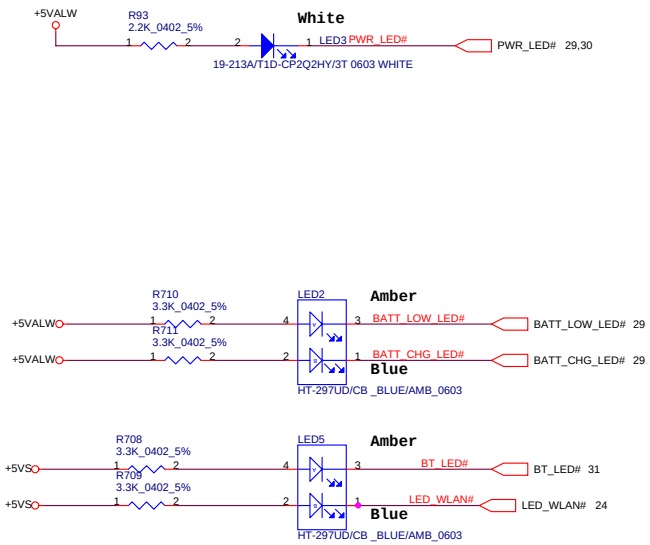

Security Classification	Compal Secret Data		
Issued Date	2007/1/15	Deciphered Date	2008/1/15

Title: ***PWR_OK/BTN/TP***

Size: Custom | Document Number: ***LA-4841P*** | Rev: 1.0

Date: Monday, December 15, 2008 | Sheet 32 of 45

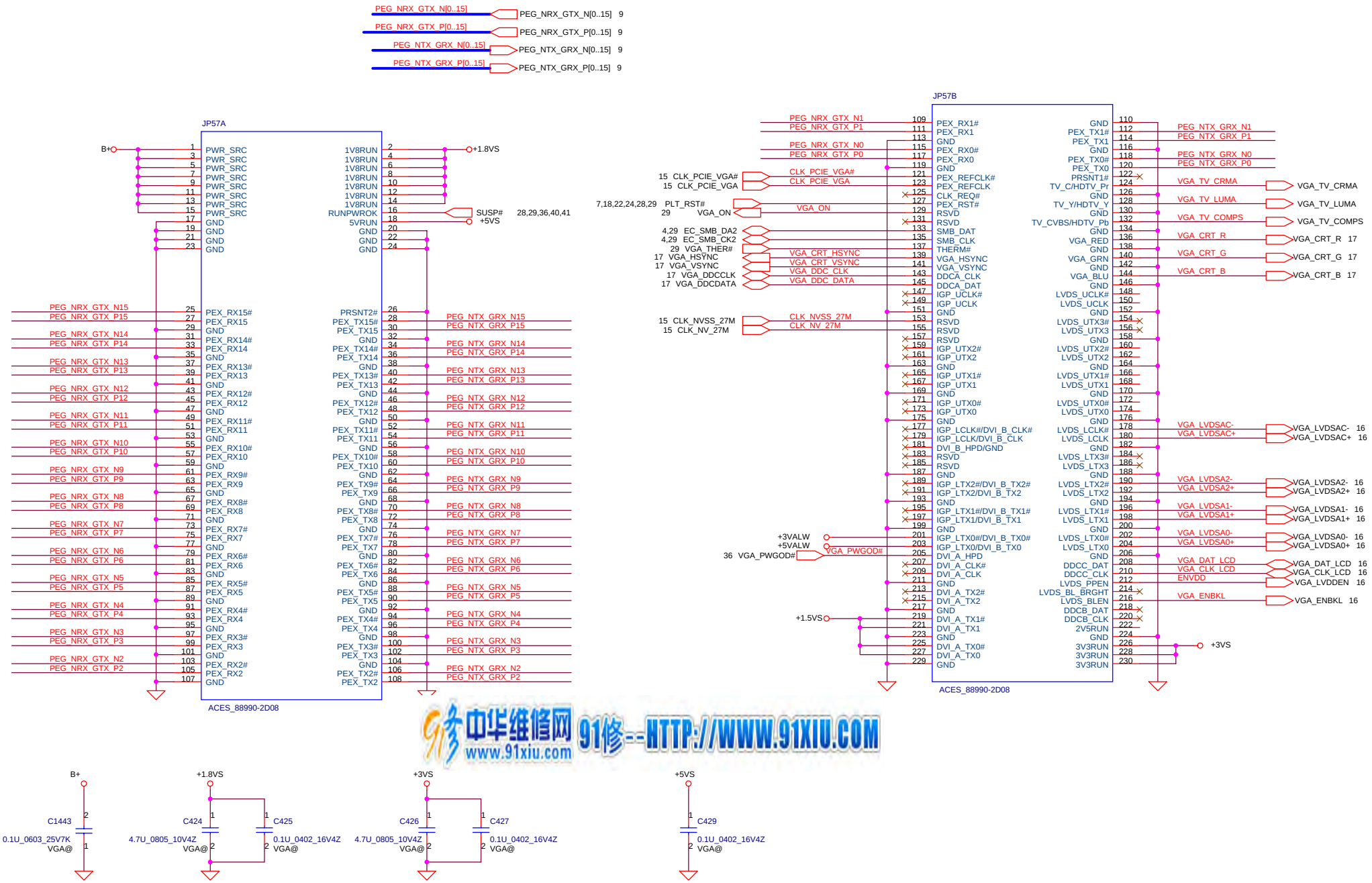

Security Classification	Compal Secret Data		
Issued Date	2006/08/18	Deciphered Date	2007/8/18

Compal Electronics, Inc.

Title: MXM Connector

Size: Custom | Document Number: LA-4841P | Rev: 1.0

Date: Monday, December 15, 2008 | Sheet 33 of 45

H_3P0

H2 HOLEA, H3 HOLEA, H4 HOLEA, H5 HOLEA, H6 HOLEA, H7 HOLEA, H8 HOLEA, H9 HOLEA, H10 HOLEA, H11 HOLEA, H12 HOLEA, H13 HOLEA

H_3P7

H14 HOLEA, H15 HOLEA, H16 HOLEA, H17 HOLEA, H18 HOLEA

H_4P2

H19 HOLEA, H20 HOLEA, H21 HOLEA, H22 HOLEA

H_3P2

H23 HOLEA, H24 HOLEA, H25 HOLEA, H26 HOLEA, H27 HOLEA, H28 HOLEA, H29 HOLEA, H30 HOLEA

H_5P6

H31 HOLEA

H_4P4

H_3P1N

H33 HOLEA

FD1, FD2, FD3, FD4

H34 HOLEA

H35 HOLEA, H36 HOLEA

H37 HOLEA

Security Classification	Compal Secret Data		
Issued Date	2007/1/15	Deciphered Date	2008/1/15

Compal Electronics, Inc.

Title: **Screws**

Size: Custom | Document Number: **LA-4841P** | Rev: 1.0

Date: Monday, December 15, 2008 | Sheet 34 of 45

KAL80 POWER UP SEQUENCE

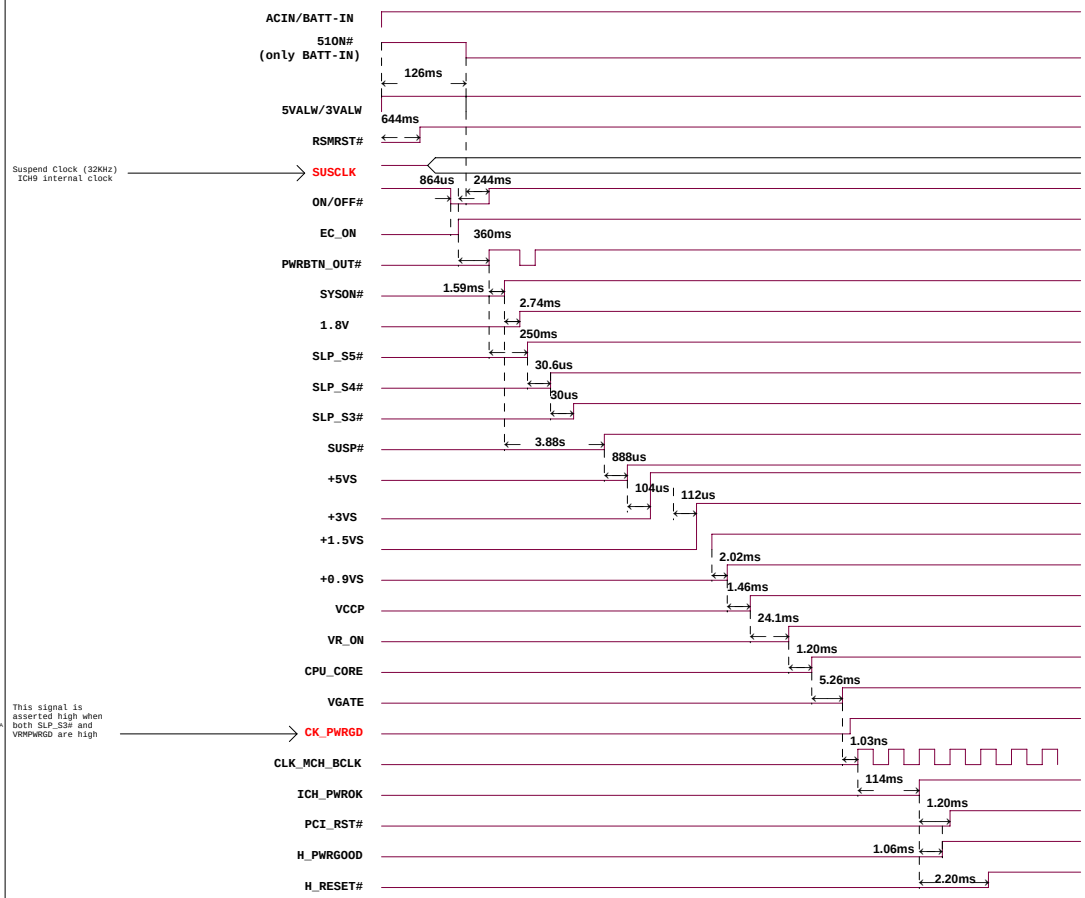

Title	<Title>	
Size: Custom	Document Number: LA-4841P	Rev: 1.0
Date: Monday, December 15, 2008	Sheet 35 of 45	

+3VALW to +3VS Transfer

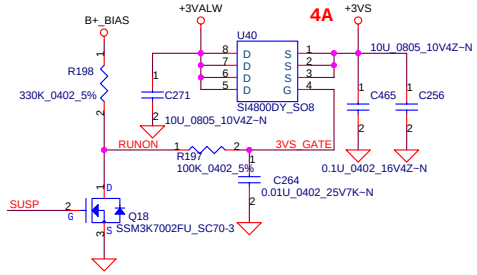

+5VALW to +5VS Transfer

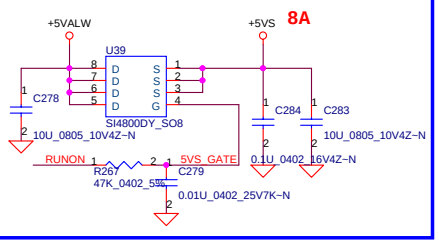

+1.8V to +1.8VS Transfer

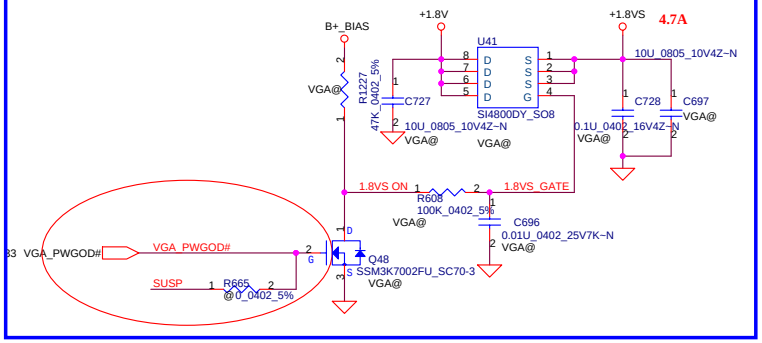

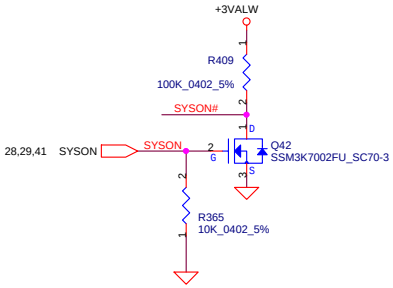

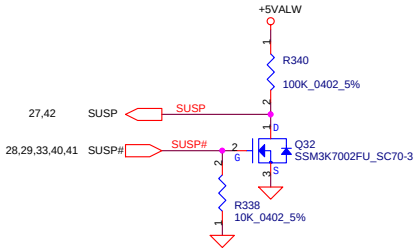

Discharge circuit-1

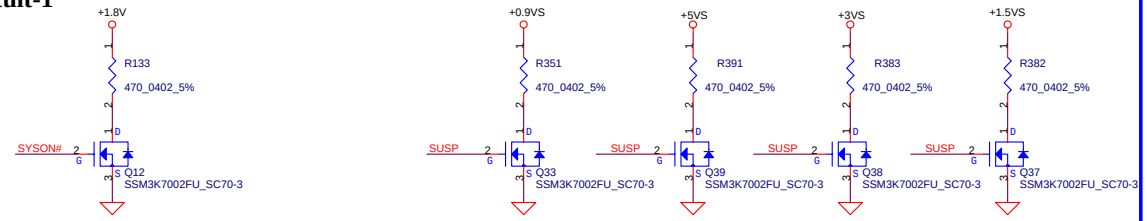

SYSON -> SUSP# -> VGA_ON->VGA_PWGOD

Security Classification	Compal Secret Data		
Issued Date	2007/1/15	Deciphered Date	2008/1/15

Compal Electronics, Inc.

Title: **DC/DC Circuits**

Size: Custom | Document Number: **LA-4841P** | Rev: 1.0

Date: Monday, December 15, 2008 | Sheet 36 of 45

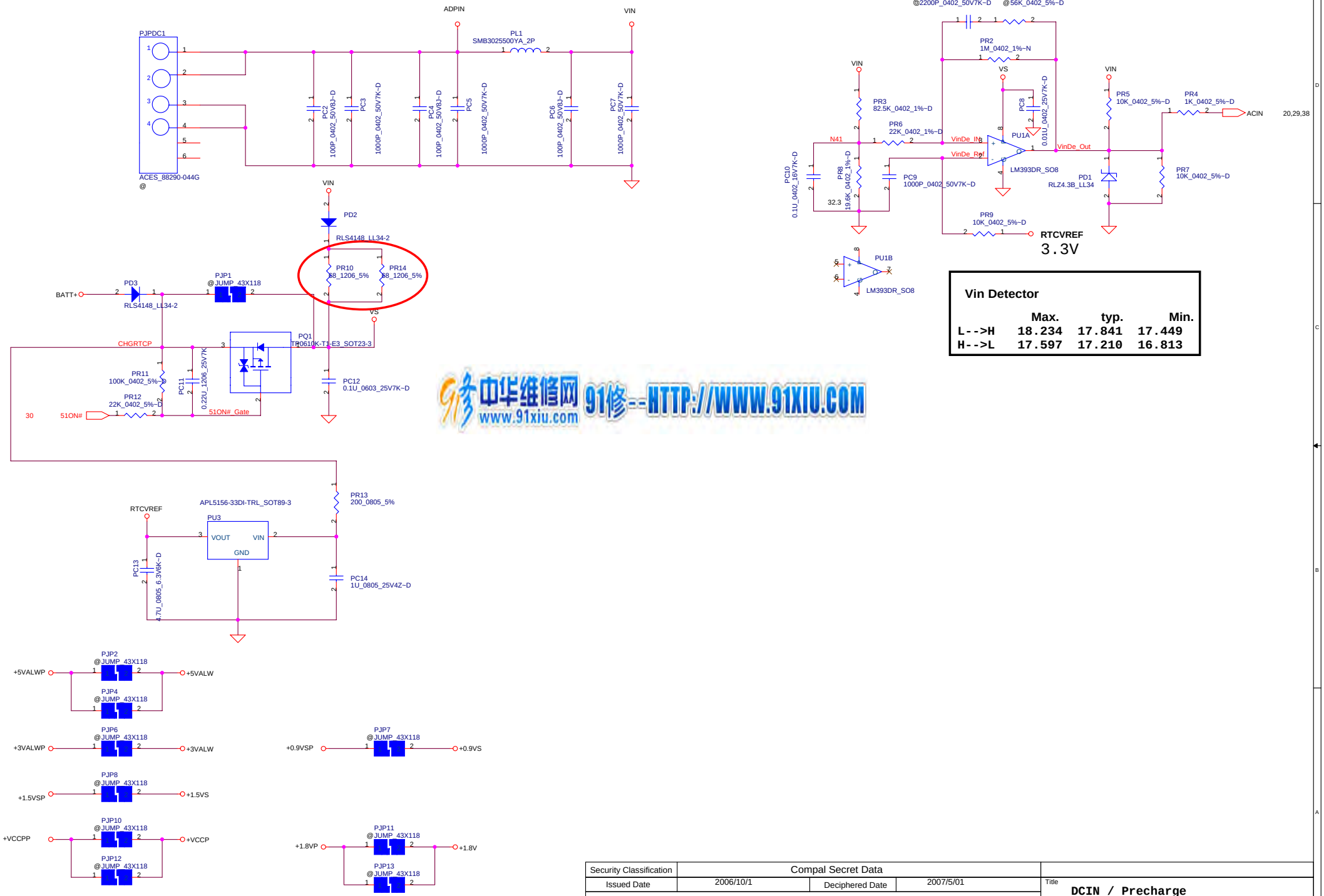

Vin Detector

	Max.	typ.	Min.
L-->H	18.234	17.841	17.449
H-->L	17.597	17.210	16.813

Security Classification	Compal Secret Data		
Issued Date	2006/10/1	Deciphered Date	2007/5/01

Title: **DCIN / Precharge**

Size: Custom | Document Number: **KFW11** | Rev: 1.0

Date: Monday, December 15, 2008 | Sheet 37 of 45

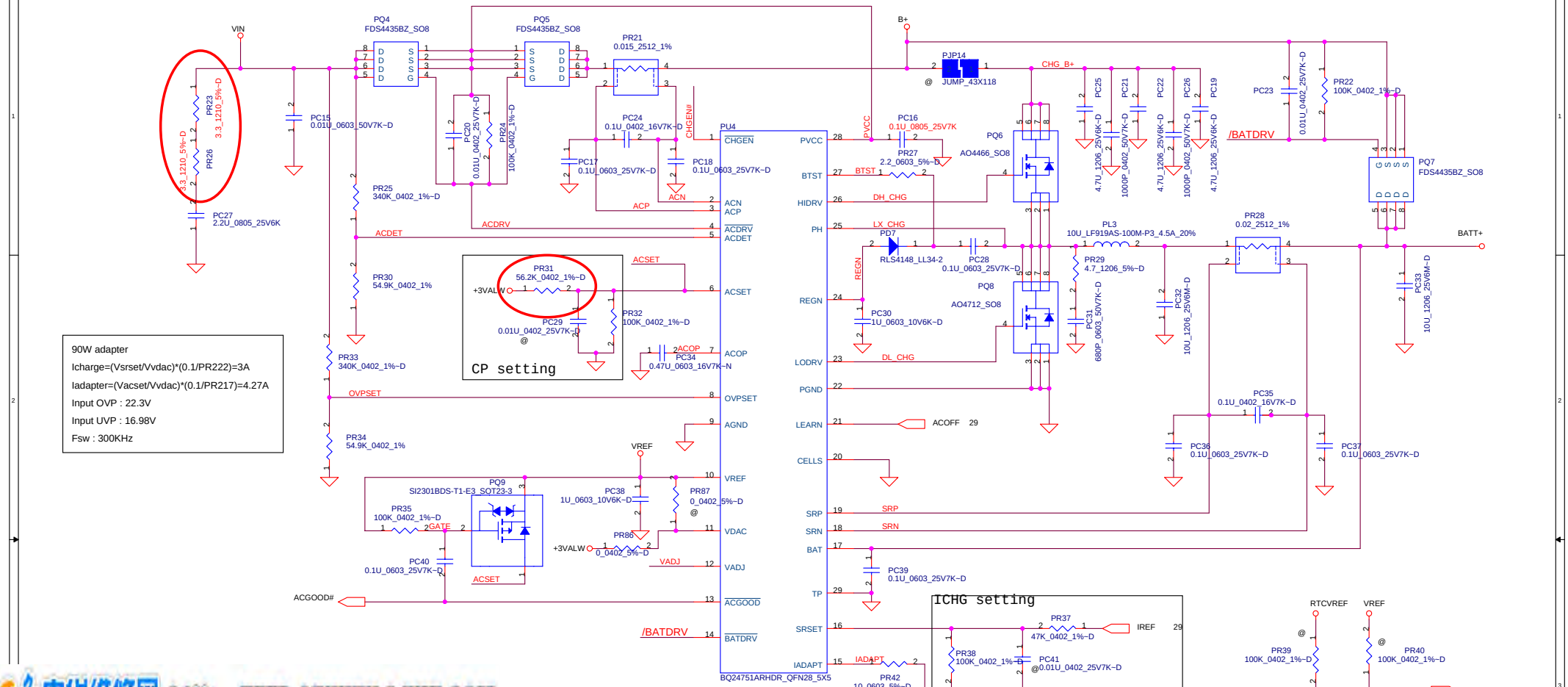

90W adapter

Icharge=(Vsrset/Vvdac)*(0.1/PR222)=3A

Iadapter=(Vacset/Vvdac)*(0.1/PR217)=4.27A

Input OVP : 22.3V

Input UVP : 16.98V

Fsw : 300KHz

IREF	Current
0.486V	0.5A
2.916V	3A

CHGVADJ	Battery Voltage/per cell
0V	3V
3.3V	4.2V

Security Classification	Compal Secret Data		
Issued Date	2006/10/1	Deciphered Date	2007/5/01

Compal Electronics, Inc.

Title: Charger

Size: B | Document Number: KFW11 | Rev: 1.0

Date: Monday, December 15, 2008 | Sheet 38 of 45

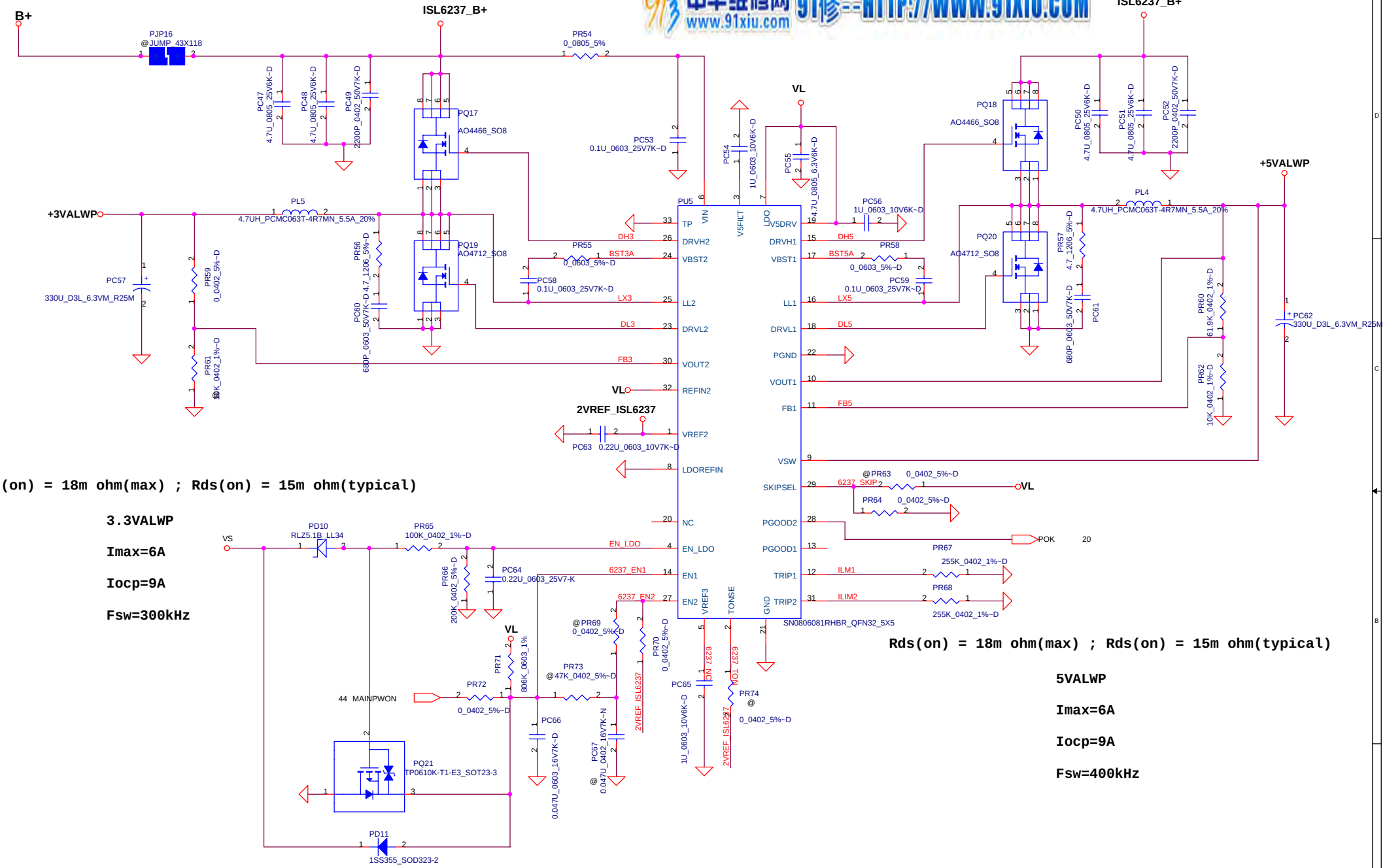

Security Classification	Compal Secret Data			Compal Electronics, Inc.
Issued Date	2006/10/1	Deciphered Date	2007/05/30	Title: +3VALWP, +5VALWP
				Size: Custom; Document Number: KFW11; Rev: 1.0
				Date: Monday, December 15, 2008; Sheet 39 of 45

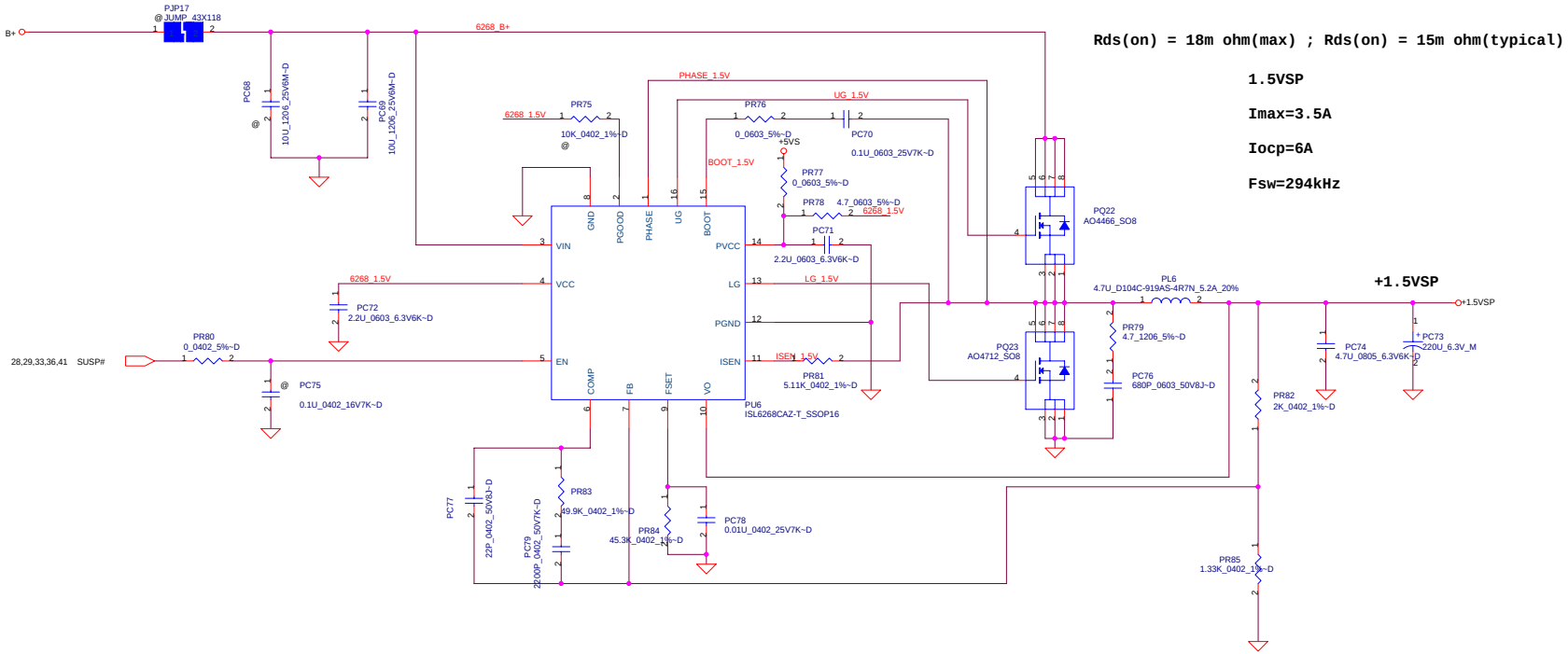

Security Classification	Compal Secret Data			Compal Electronics, Inc.
Issued Date	2006/10/1	Deciphered Date	2007/05/30	Title: 1.5VSP
				Size: Document Number: KFW11 — Rev: 1.0
				Date: Monday, December 15, 2008 — Sheet 40 of 45

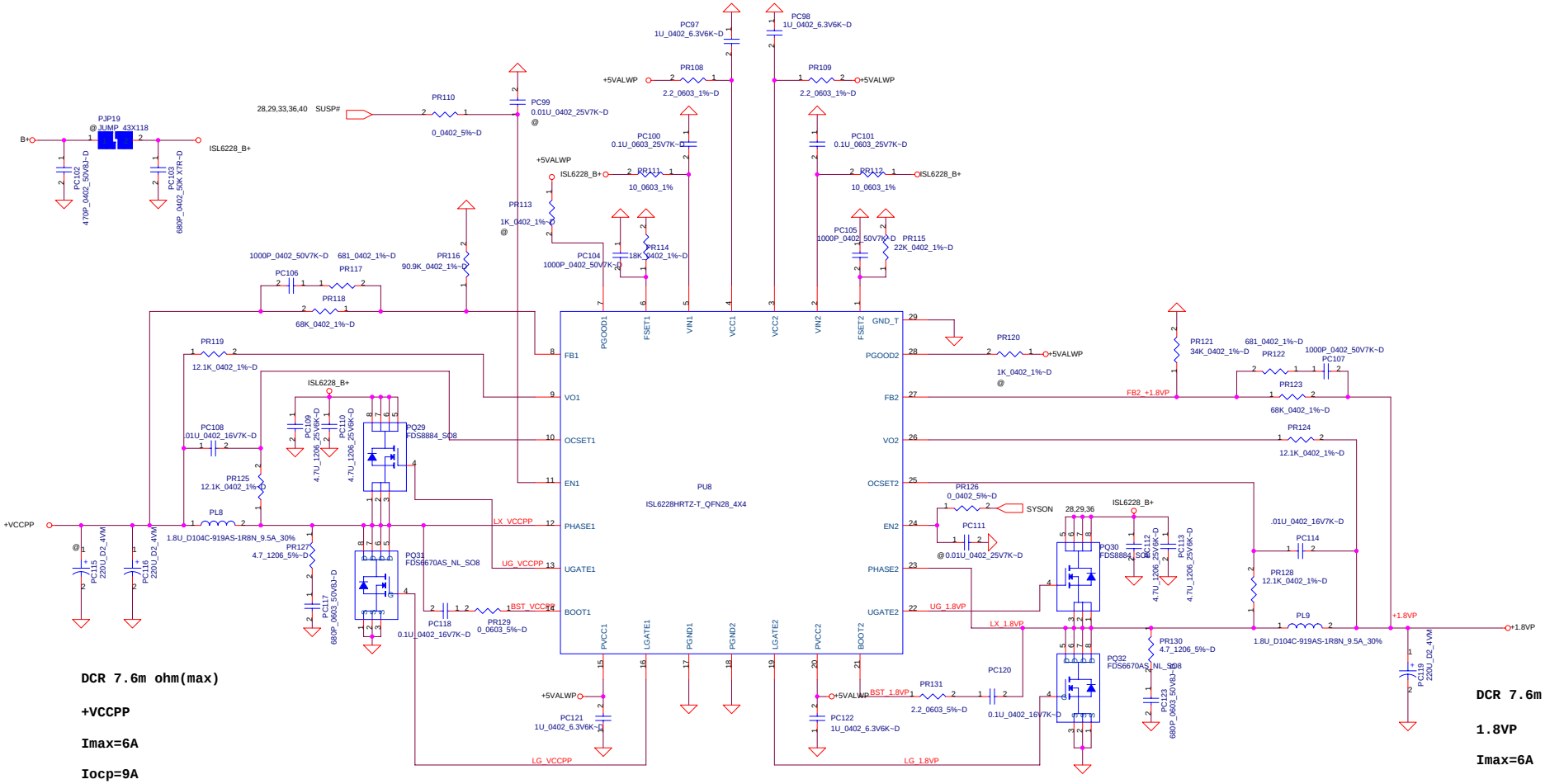

DCR 7.6m ohm(max)

+VCCPP

Imax=6A

Iocp=9A

Fsw=366kHz

DCR 7.6m ohm(max)

1.8VP

Imax=6A

Iocp=9A

Fsw=303kHz

Security Classification	Compal Secret Data		
Issued Date	2006/10/1	Deciphered Date	2007/5/01

Title: **VCCPP/1.8VP**

Size | Document Number: **KFW11** | Rev: 1.0

Date: Monday, December 15, 2008 | Sheet 41 of 45

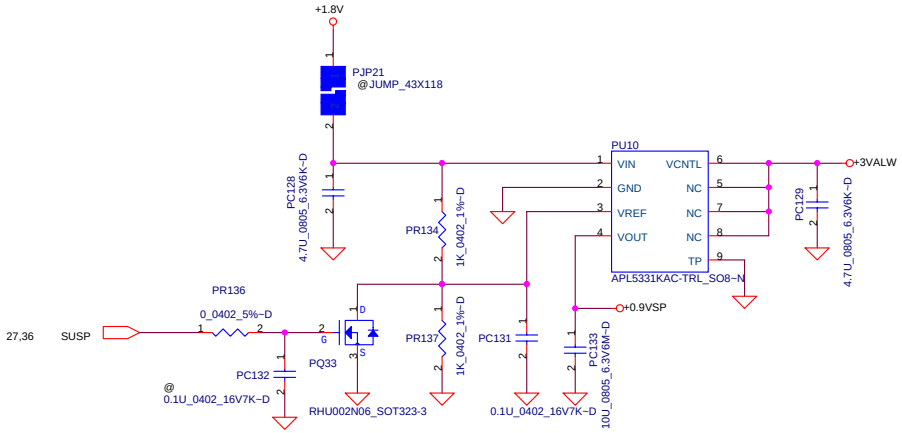

Security Classification	Compal Secret Data			Compal Electronics, Inc.
Issued Date	2005/10/1	Deciphered Date	2007/05/30	Title: +0.9VSP
				Size: Custom; Document Number: KFW11; Rev: 1.0
				Date: Monday, December 15, 2008; Sheet 42 of 45

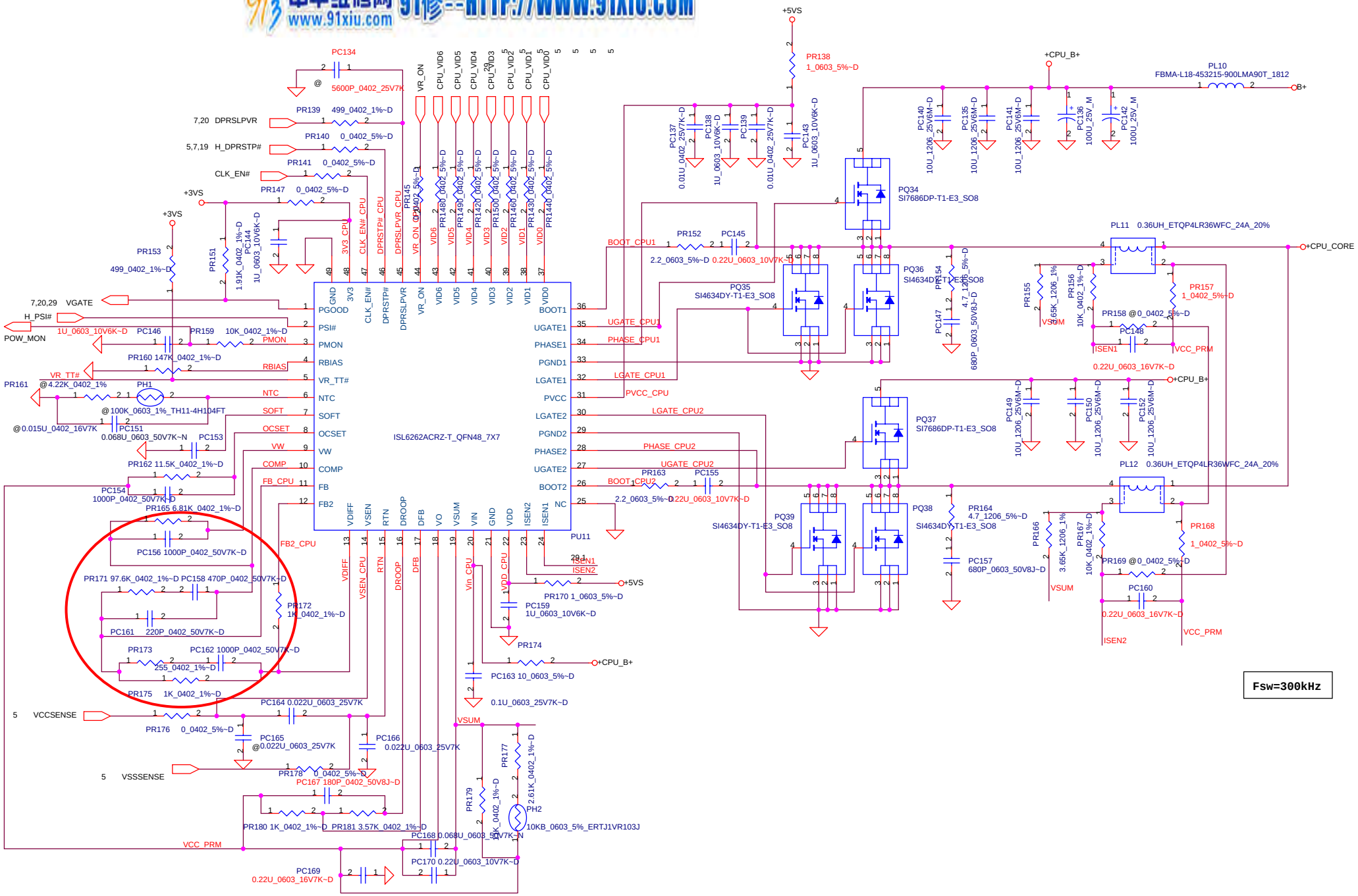

Security Classification	Compal Secret Data		
Issued Date	2007/1/15	Deciphered Date	2008/1/15

Compal Electronics, Inc.

Title: **+CPU_CORE**

Size: Custom | Document Number: **KFW11** | Rev: 1.0

Date: Monday, December 15, 2008 | Sheet 43 of 45

Battery Connect/OTP

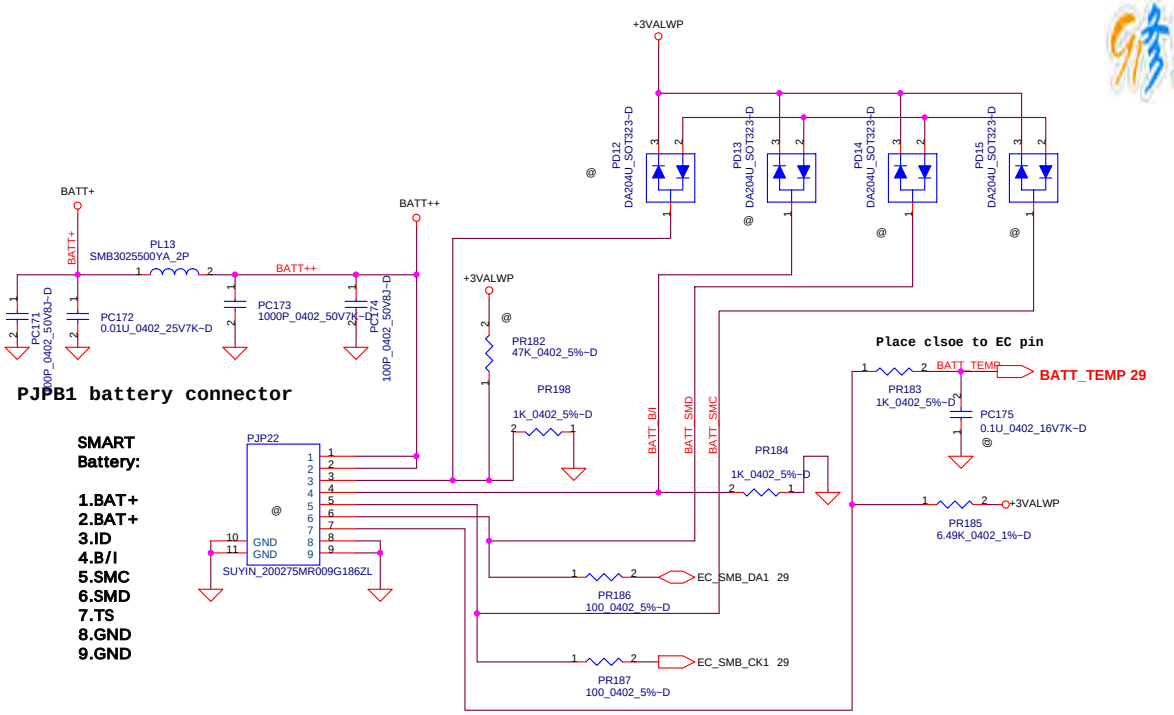

CPU

PH1 under CPU botten side :
CPU thermal protection at 90 +-3 degree C
Recovery at 50 +-3 degree C

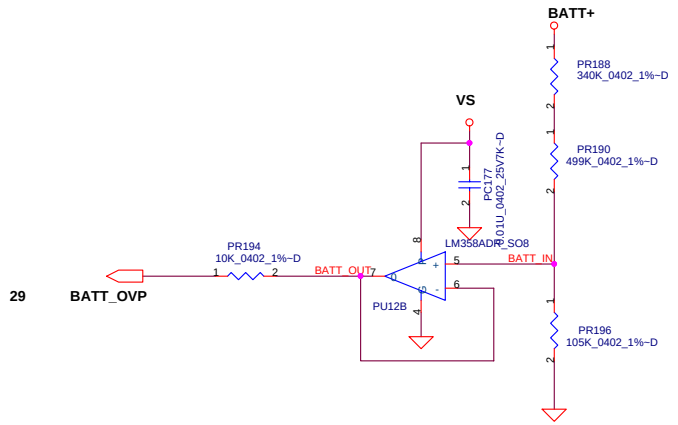

OVP voltage :
LI-3S :13.50V--BATT-OVP=1.5V
BATT-OVP=0.111*BATT+

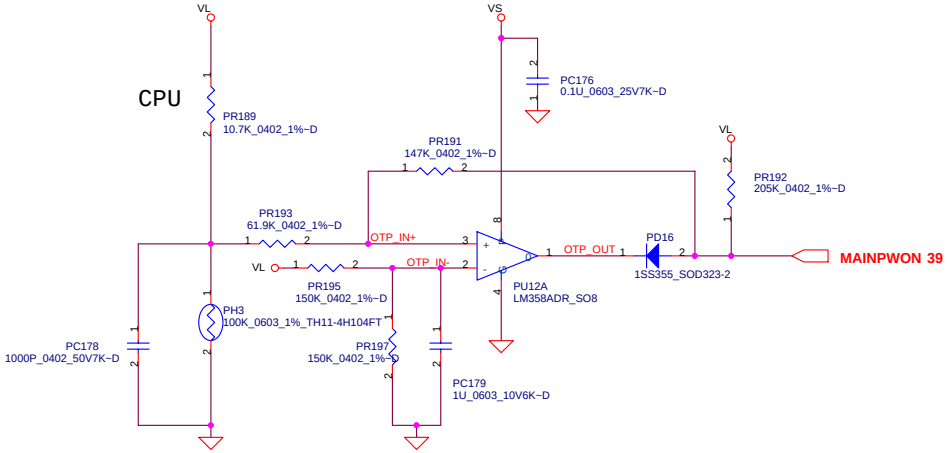

Security Classification	Compal Secret Data		
Issued Date	2005/10/1	Deciphered Date	2007/05/30

Compal Electronics, Inc.

Title: **BATTERY CONN**

Size: Custom | Document Number: **KFW11** | Rev: 1.0

Date: Monday, December 15, 2008 | Sheet 44 of 45

Version Change List (P. I. R. List) Page 1/1

Item	Page#	Title	Date	Request Owner	Issue Description	Solution Description	Rev.
1							
2							
3							
4							
5							
6							
7							
8							
9							
10							
11							
12							
13							
14							
15							
16							
17							
18							
19							
20							
21							
22							
23							
24							
25							
26							
27							
28							
29							
30							
31							
32							

Security Classification	Compal Secret Data		
Issued Date	2007/1/15	Deciphered Date	2008/1/15

Compal Electronics, Inc.

Title: **PW PIR-1**

Size: Custom | Document Number: **KFW11** | Rev: 1.0

Date: Monday, December 15, 2008 | Sheet 45 of 45