Compal confidential

HGT30/31 Schematics Document

Mobile Yonah uFCPGA with Intel Calistoga_GM/PM+ICH7-M core logic

2006-02-15

REV:0.3

Security Classification	Compal Secret Data		
Issued Date	2005/03/10	Deciphered Date	2006/03/10

Compal Electronics, Inc.

Title: *Cover Sheet*

Size: Custom | Document Number: *HGT30/31 LA-3061* | Rev: 0.1

Date: 星期四, 二月 23, 2006 | Sheet 1 of 47

Compal confidential

File Name : LA-3061

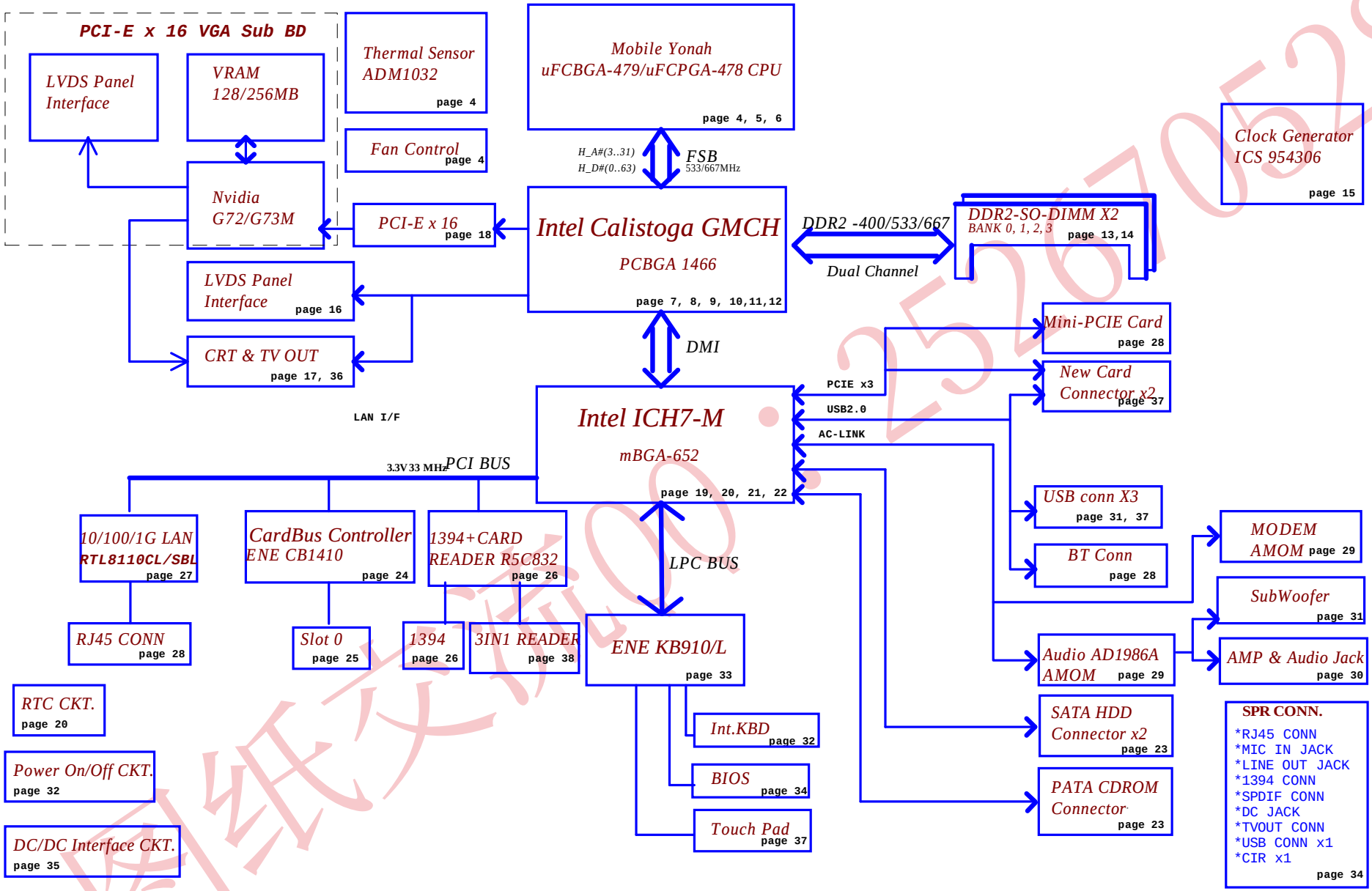

Security Classification	Compal Secret Data		
Issued Date	2005/03/10	Deciphered Date	2006/03/10

Compal Electronics, Inc.

Title: **Block Diagram**

Size	Document Number	Rev
Custom	HGT30/31 LA-3061	0.1

Date: 星期四, 二月 23, 2006 | Sheet 2 of 47

Power Block Diagram Of The IMVP6

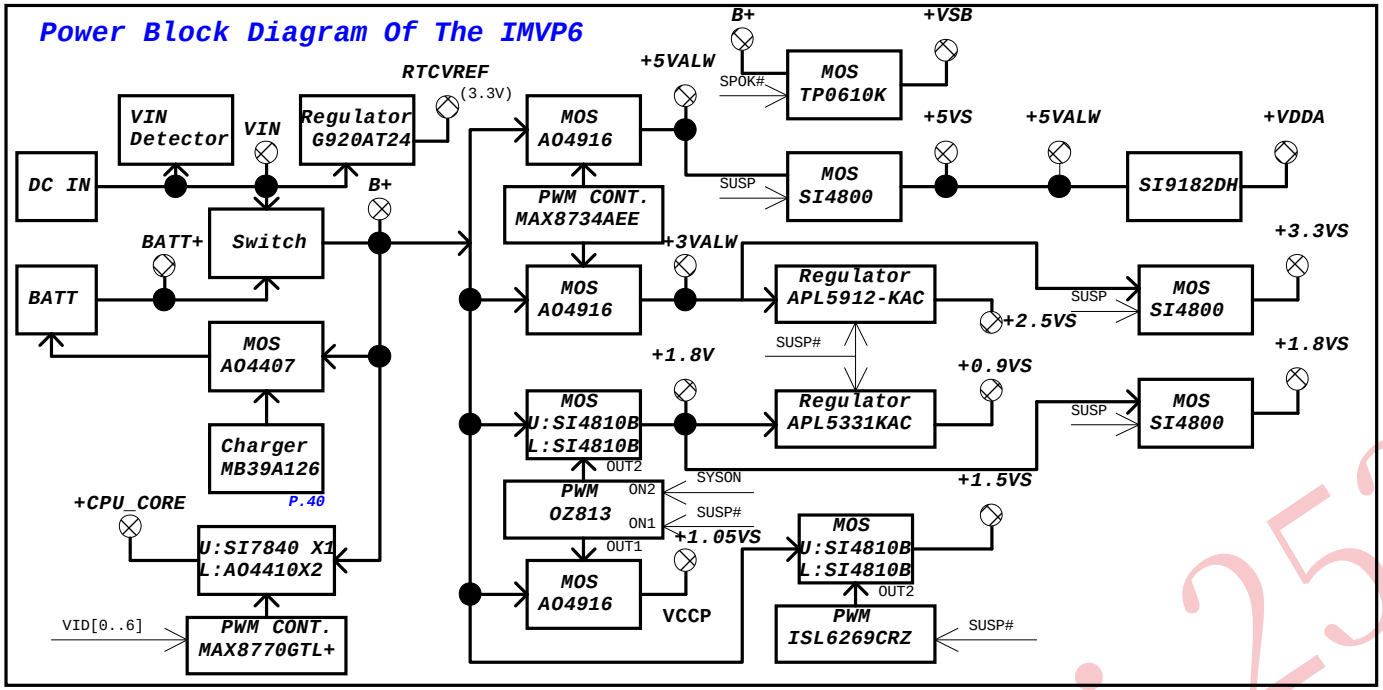

+3VALW	KB910L SB RTL8110SBL/CL	mA 160mA
+CPU_CORE	CPU	36A
+VCCP	CPU NB	2.5A 9.8A (14.7A)
+5VS	EXPRESS CARD HDD ODD MDC APA2066 TPA0211 AD1986 USB PORT * 6	1A 1.5A 1.8A 300mA 1A mA 70mA 3A
+3VS	NB EXPRESS CARD CLK_GEN LCDVCC VGA CARD (G7XM) SB R5C832 BIOS ROM KB910L CB1410	480mA 1A 200mA 1A 655mA 680mA mA 15mA 200mA mA
+2.5VS	VGA CARD (G7XM) NB	130mA (143mA)
+1.8V	DDR2_DIMM NB (667Mhz)	8A 3.1A
+1.8VS	GDDR2 VGA CARD (G7XM)	6A 4.06A
+0.9VREF	DDR2_DIMM	10mA
+0.9VS	GDDR2 DDR2_DIMM	1A 2A
+1.5V	SB	40mA
+1.5VS	NB SB MiniCard EXPRESS CARD VGA CARD (G7XM)	8.9A(13.8A) 3.8A 1A 0.65A 2A

PCI DEVICES

EXTERNAL	IDSEL#	REQ/GNT#	PIRQ
CARD BUS CB1410	AD20	2	PCI_PIRQA#
CARD READER & 1394 R5C832	AD22	0	PCI_PIRQG# PCI_PIRQH#
LAN CONTROLLER RTL8110SBL/CL	AD17	3	PCI_PIRQF#

Voltage Rails

O MEANS ON
X MEANS OFF

State (S4 : STD, S5 : SOFT OFF) \ power plane	+B LDO3 LDO5	+5VALW +3VALW	+1.8V +5V	+5VS +3VS +2.5VS +1.8VS +1.5VS +VGA_CORE +1.2VS +0.9VS +CPU_CORE +VCCP
S0	O	O	O	O
S1	O	O	O	O
S3 : STR	O	O	O	X
S5 S4/AC	O	O	X	X
S5 S4/ Battery only	O	X	X	X
S5 S4/AC & Battery don't exist	X	X	X	X

PCIE LANE

LANE	DEVICE
1	Express Card
2	Mini Card

USB

PORT	DEVICE
0	LEFT SIDE
1	BLUE TOOTH
2	RIGHT SIDE
3	NC
4	RIGHT SIDE
5	NC
6	NC

I2C / SMB Address

DEVICE	ADDRESS R/W	
KB910/L (SM1-Pulled-Up 5V)		
AT24C16AN	A3/A2 H	
SMART BATTERY	17/16 H	
KB910/L (SM2-Pulled-Up 3.3V)		
ADM1032AR	99/98 H	
G7xM (I2CC-Pulled-Up 3.3V)		
G781-1 (RESERVED)	9B/9A	
ICH7M SM Bus		
ICS9LPR325AKLFT	D3/D2 H	(3.3V)
DDR II DIMM0	A1/A0 H	(3.3V)
DDR II DIMM1	A3/A2 H	(3.3V)
Express Card	NC	(2.5V)
Mini-Express	NC	(2.5V)

BOM Structure

MARK	FUNCTION
@	NC FOR ALL
EXP@	PCIE-NEW CARD
BT@	BLUE TOOTH
UMA@	Internal 945GM
VGA@	External G7xM
SUBWOOFER@	SUBWOOFER
HGT30@	HGT30
CB@	PCMCIA/CARD BUS
GIGA@	8110SBL(SCL)Giga LAN
10/100@	8110CL 10/100Mb LAN

MB_ID

MB ID	P NAME
0	HGT-30
1	HGT-31

BRD_ID

R119(Ra)=100K Ohm

ID	MB REV#	R115(Rb)	Vab
0	R01 (EVT)	0	0V
1	R02 (DVT)	8.2K	0.25V
2	R03	18K	0.50V
3	R04	33K	0.82V
4		56K	1.19V
5		100K	1.65V
6		200K	2.20V
7		NC	3.30V

Security Classification	Compal Secret Data		
Issued Date	2005/03/10	Deciphered Date	2006/03/10

Compal Electronics, Inc.

Title: Notes List

Size: Custom | Document Number: HGT30/31 LA-3061 | Rev: 0.1

Date: 星期四, 二月 23, 2006 | Sheet 3 of 47

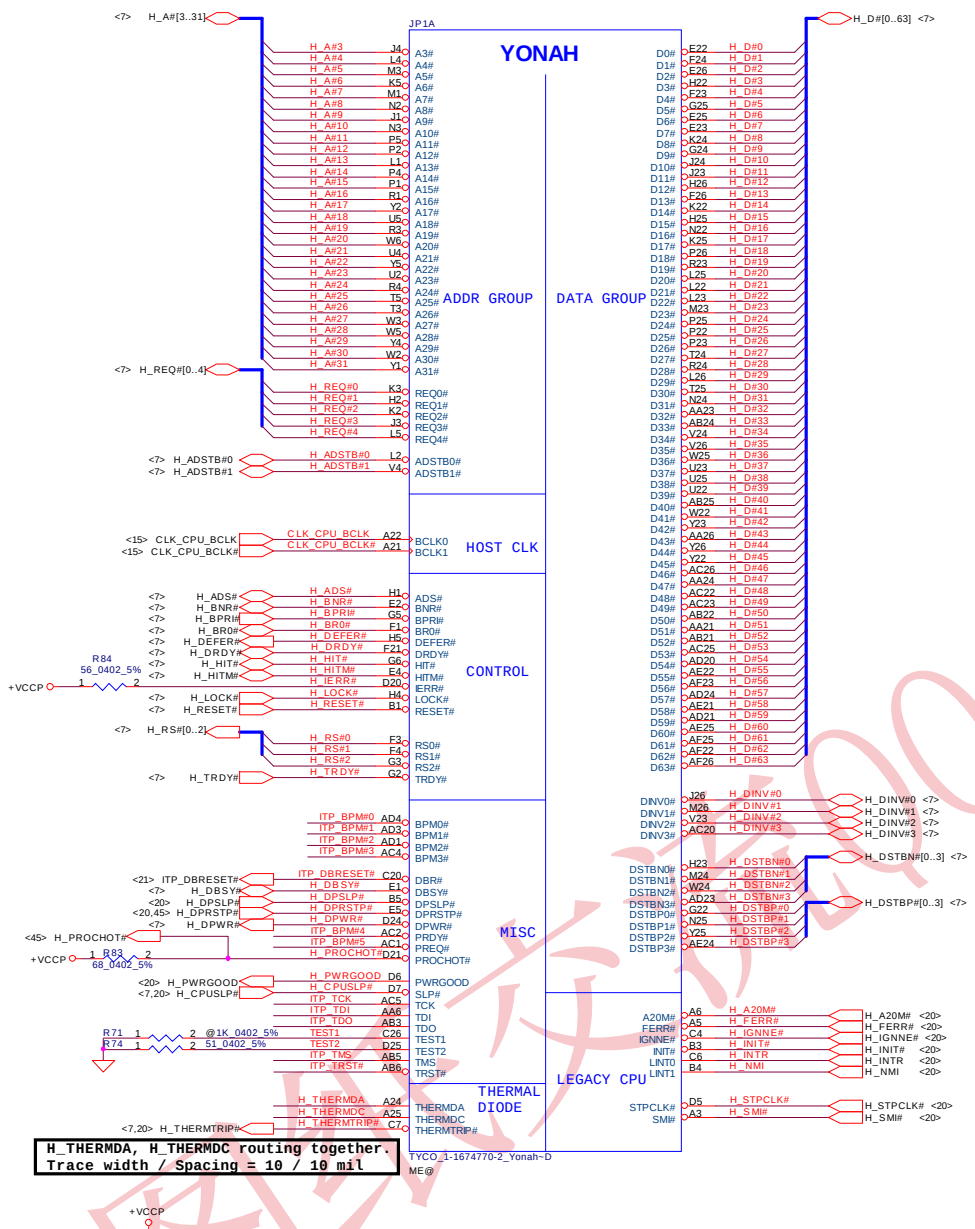

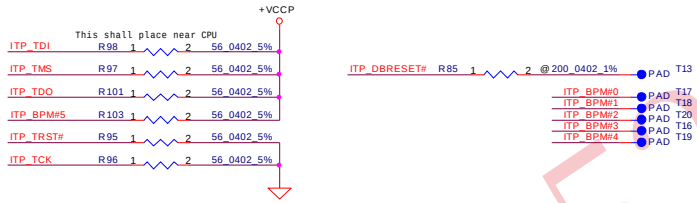

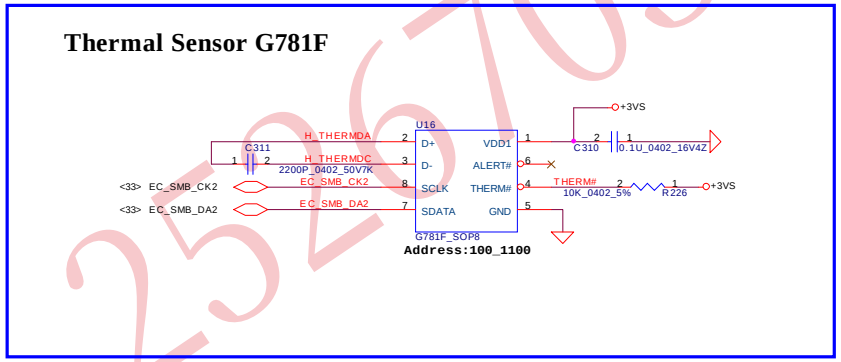

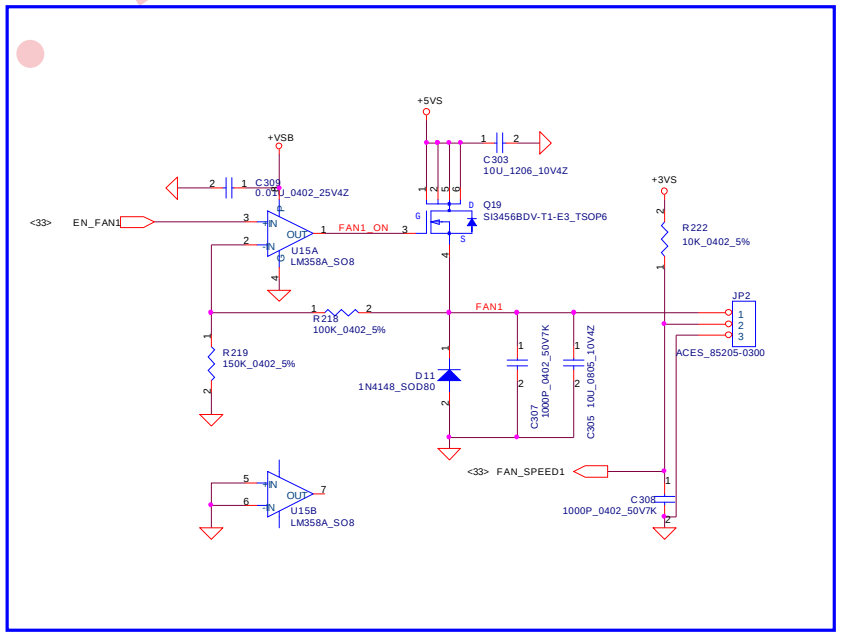

Security Classification	Compal Secret Data		
Issued Date	2005/10/06	Deciphered Date	2006/10/06

Compal Electronics, Inc.

Title: Yonah CPU in mFCPGA479

Size: Custom | Document Number: HGT30/31 LA-3061 | Rev: 0.1

Date: 星期四, 二月 23, 2006 | Sheet 4 of 47

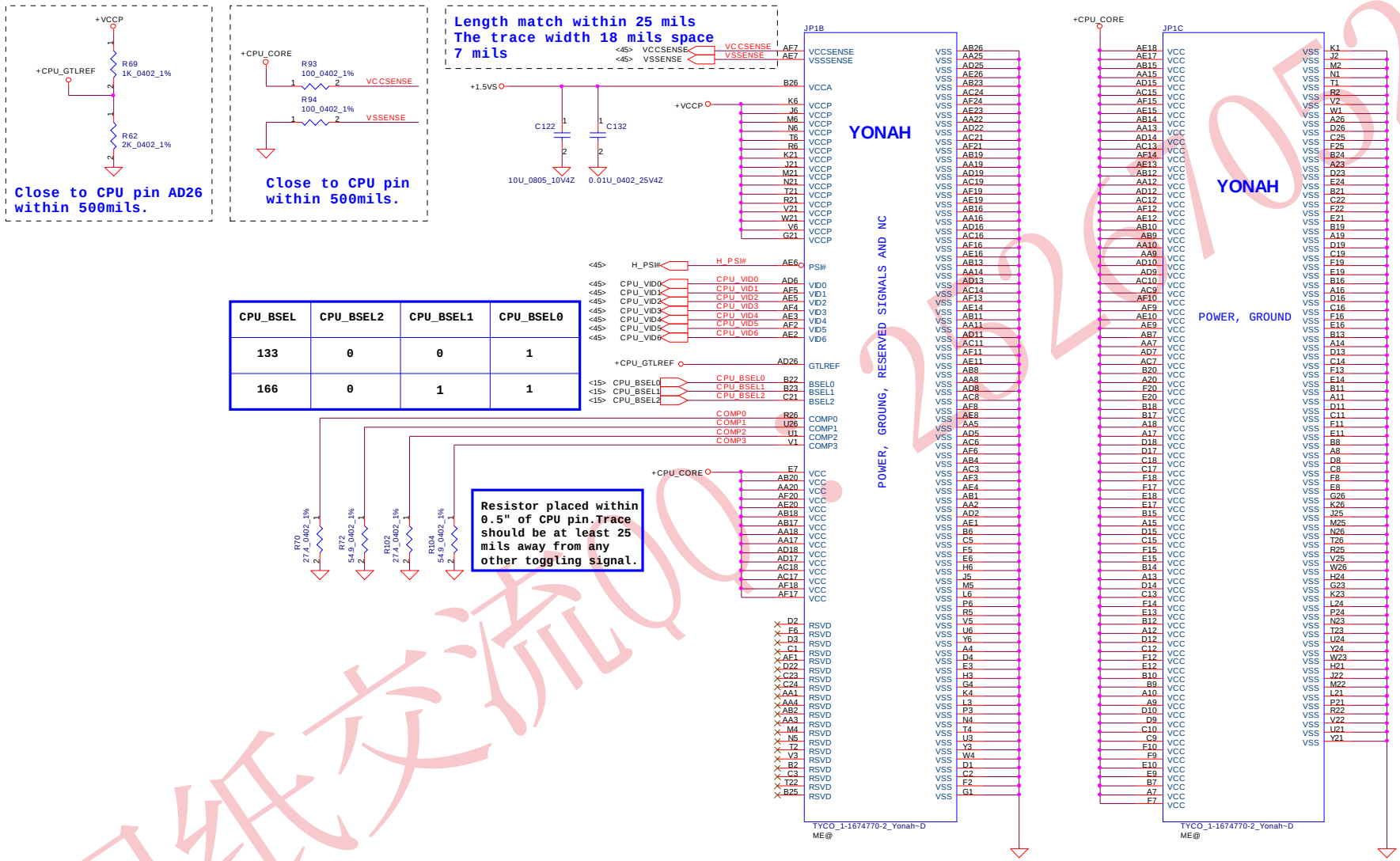

CPU_BSEL	CPU_BSEL2	CPU_BSEL1	CPU_BSEL0
133	0	0	1
166	0	1	1

Security Classification	Compal Secret Data		
Issued Date	2005/10/06	Deciphered Date	2006/10/06

Compal Electronics, Inc.

Title: **Yonah CPU in mFCPGA479**

Size: Custom | Document Number: HGT30/31 LA-3061 | Rev: 0.1

Date: 星期四, 二月 23, 2006 | Sheet 5 of 47

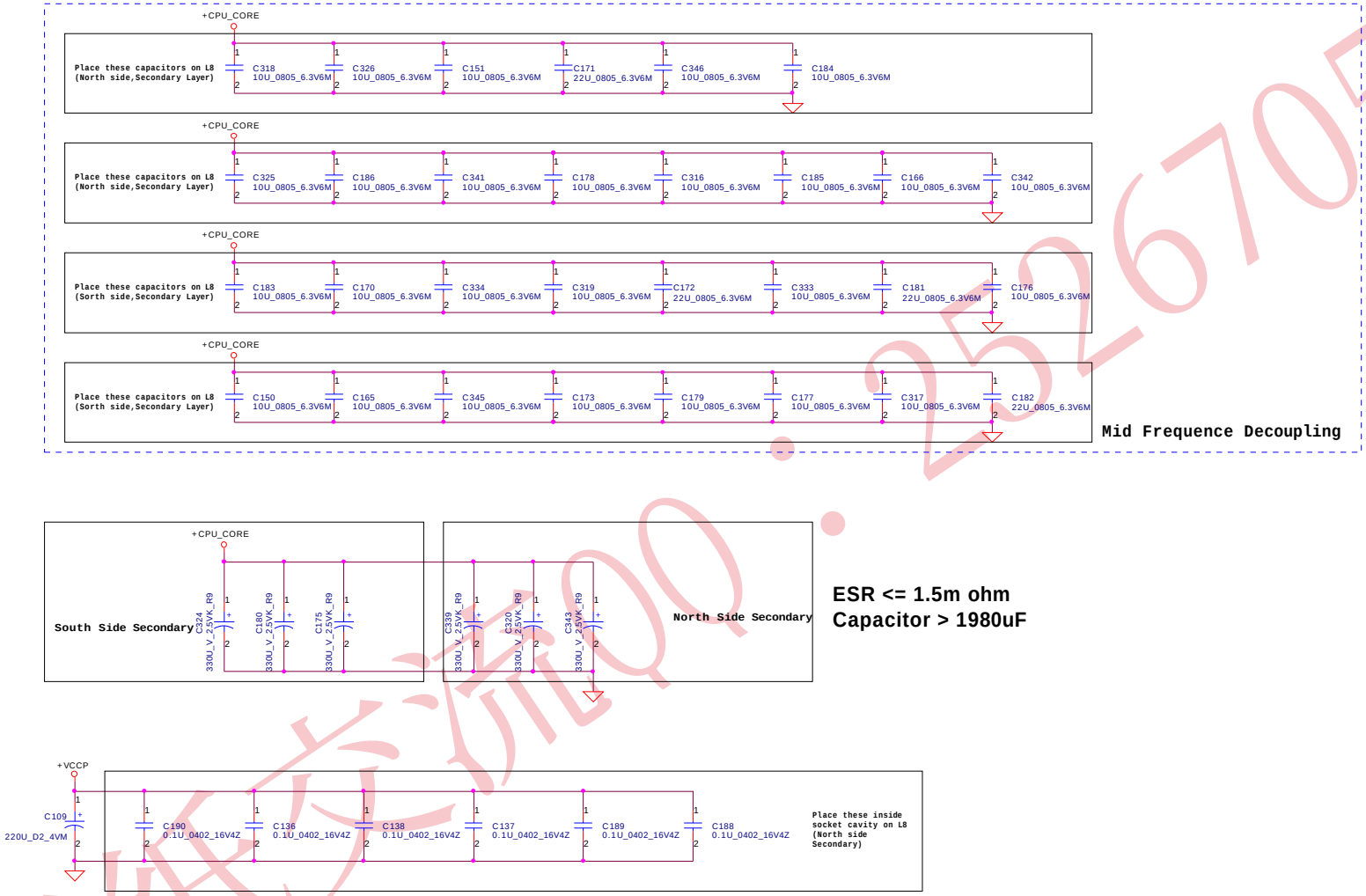

Security Classification	Compal Secret Data		
Issued Date	2005/10/06	Deciphered Date	2006/10/06

Compal Electronics, Inc.

Title: **CPU Bypass capacitors**

Size: Custom | Document Number: HGT30/31 LA-3061 | Rev: 0.1

Date: 星期四, 二月 23, 2006 | Sheet 6 of 47

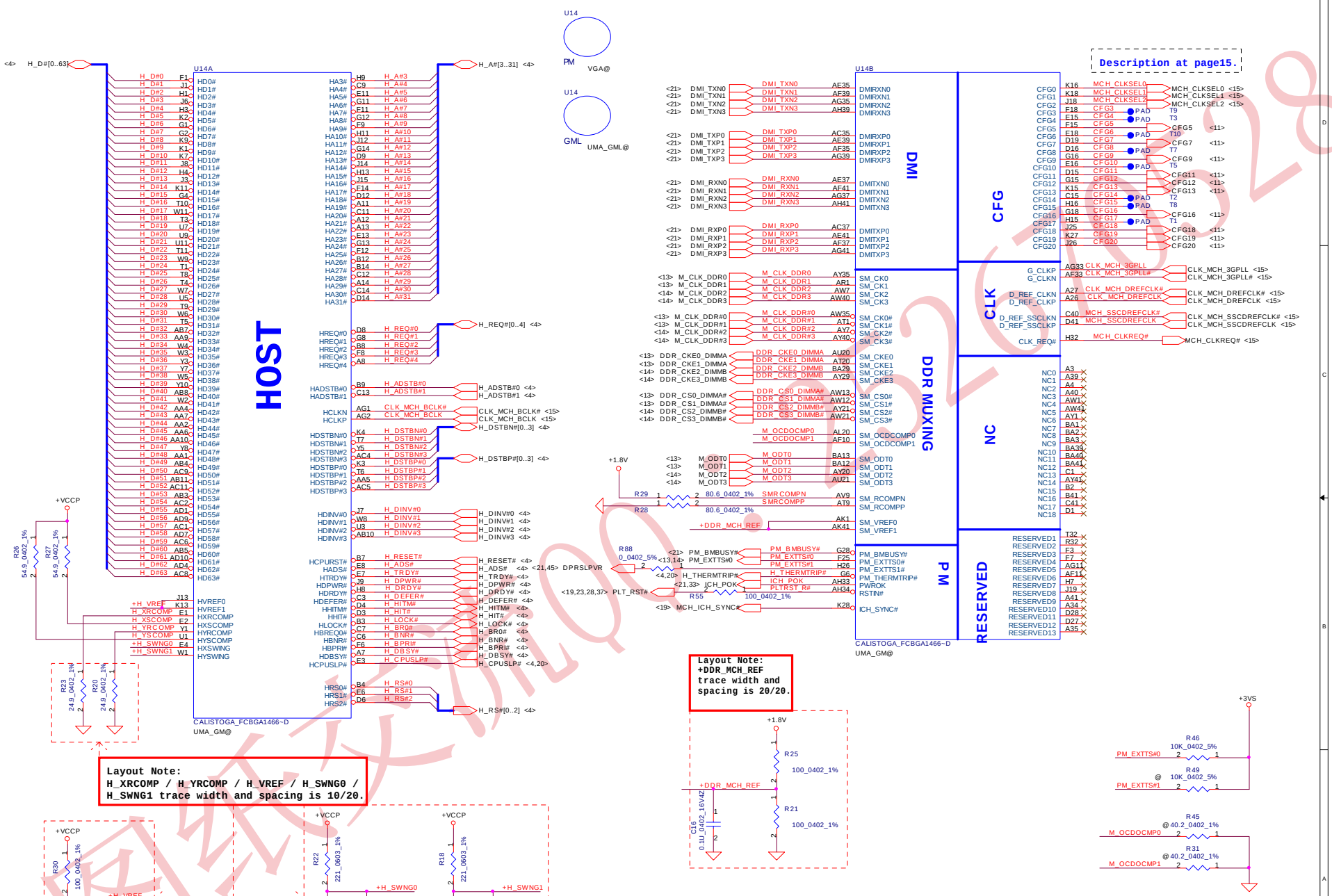

Security Classification	Compal Secret Data		
Issued Date	2005/10/06	Deciphered Date	2006/10/06

Compal Electronics, Inc.

Title: Calistoga (1/6)

Size: Custom | Document Number: HGT30/31 LA-3061 | Rev: 0.1

Date: 星期四, 二月 23, 2006 | Sheet 7 of 47

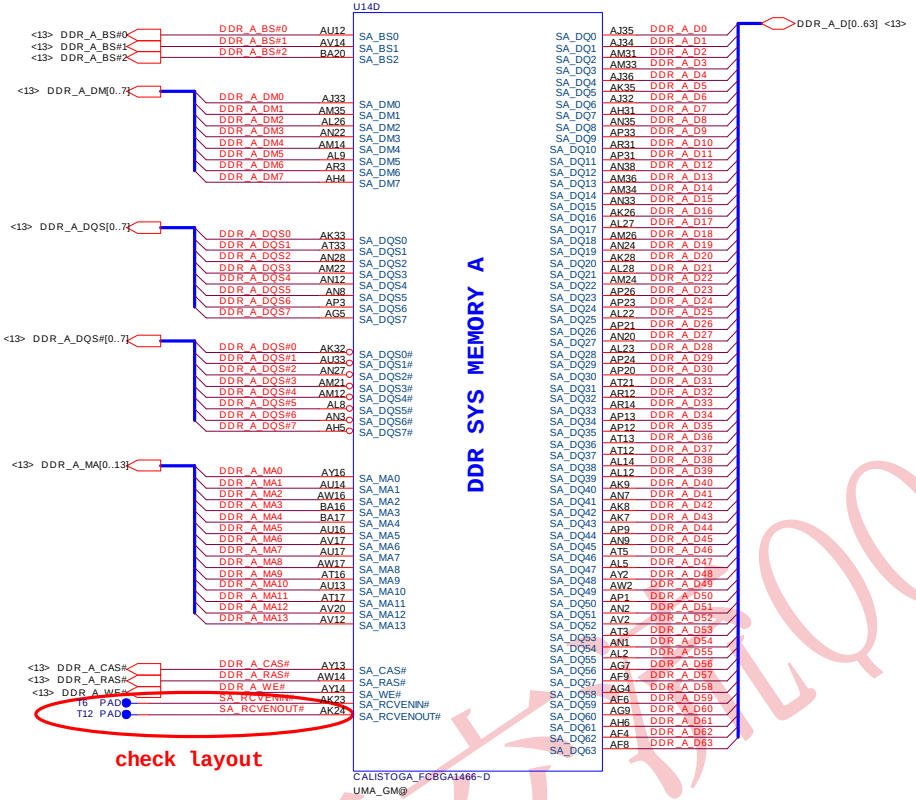

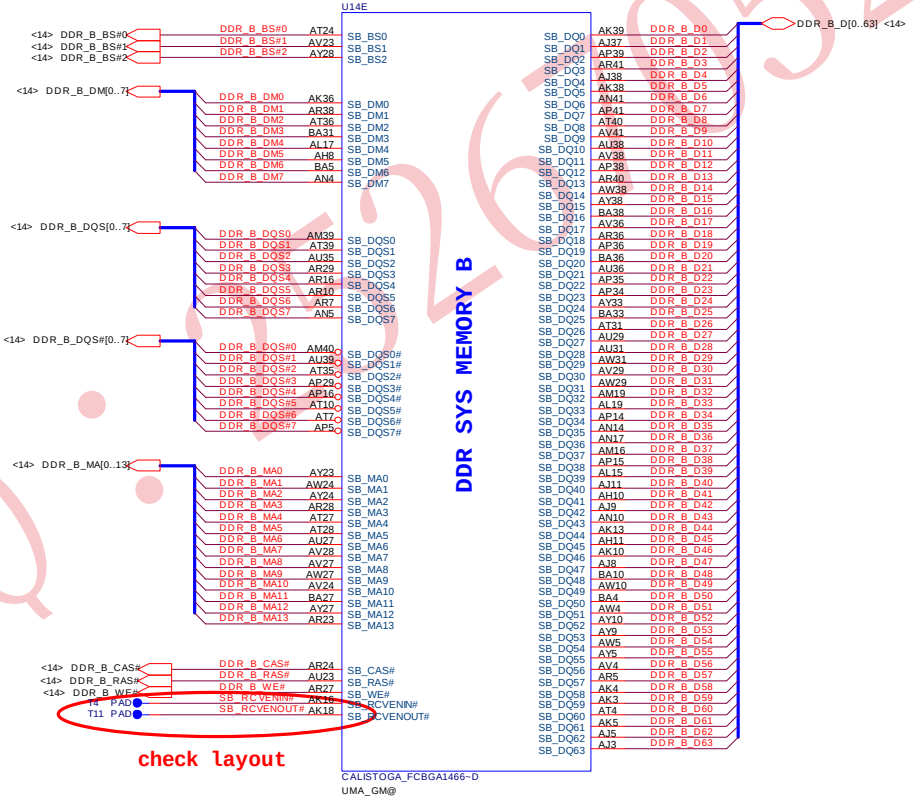

Security Classification	Compal Secret Data		
Issued Date	2005/10/06	Deciphered Date	2006/10/06

Compal Electronics, Inc.

Title: **Calistoga (2/6)**

Size: Custom | Document Number: HGT30/31 LA-3061 | Rev: 0.1

Date: 星期四, 二月 23, 2006 | Sheet 8 of 47

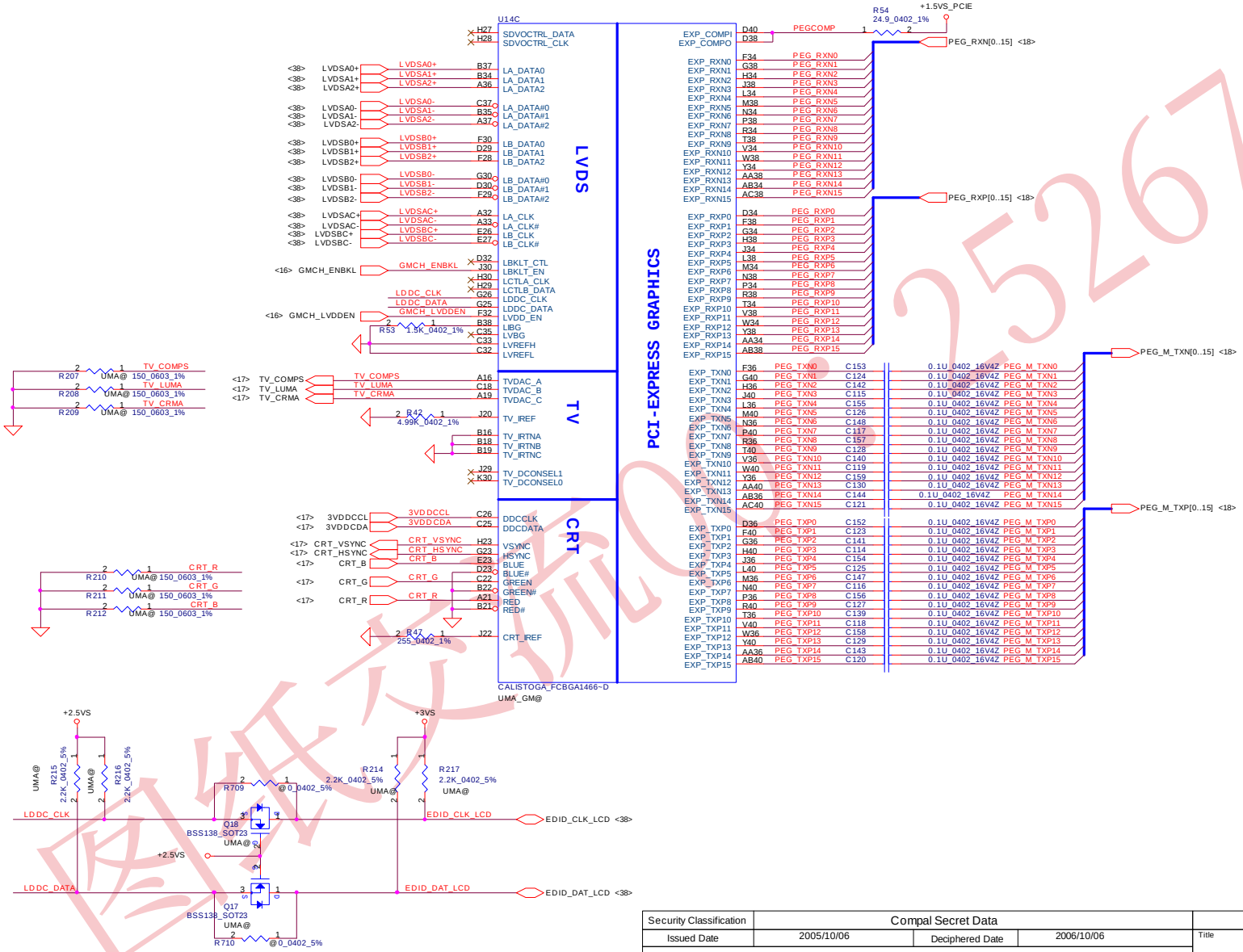

Security Classification	Compal Secret Data		
Issued Date	2005/10/06	Deciphered Date	2006/10/06

Compal Electronics, Inc.

Title: **Calistoga (3/6)**

Size	Document Number	Rev
Custom	HGT30/31 LA-3061	0.1

Date: 星期四, 二月 23, 2006 | Sheet 9 of 47

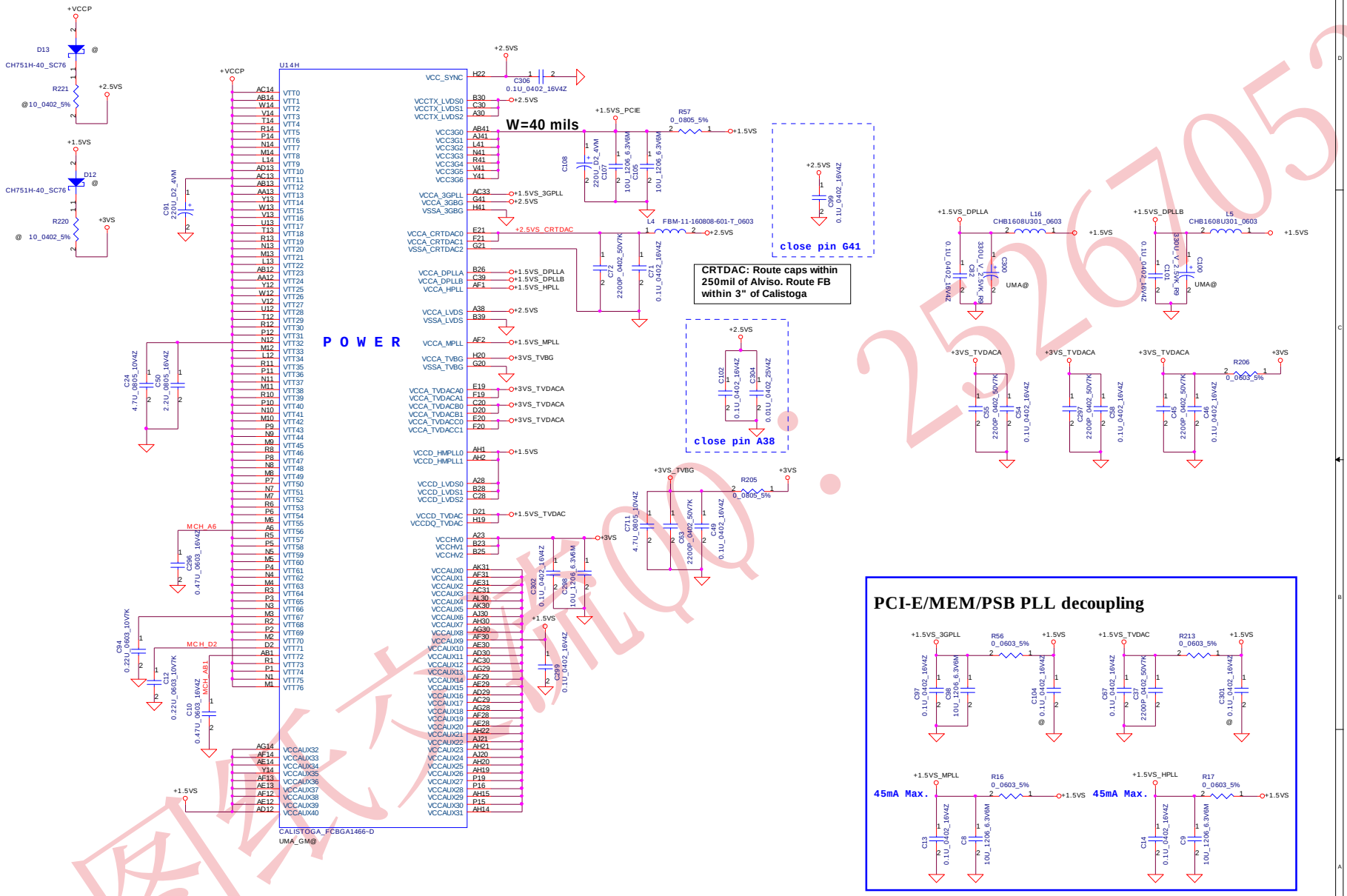

Security Classification	Compal Secret Data		
Issued Date	2005/10/06	Deciphered Date	2006/10/06

Compal Electronics, Inc.

Title: Calistoga (4/6)

Size: Custom | Document Number: HGT30/31 LA-3061 | Rev: 0.1

Date: 星期四, 二月 23, 2006 | Sheet 10 of 47

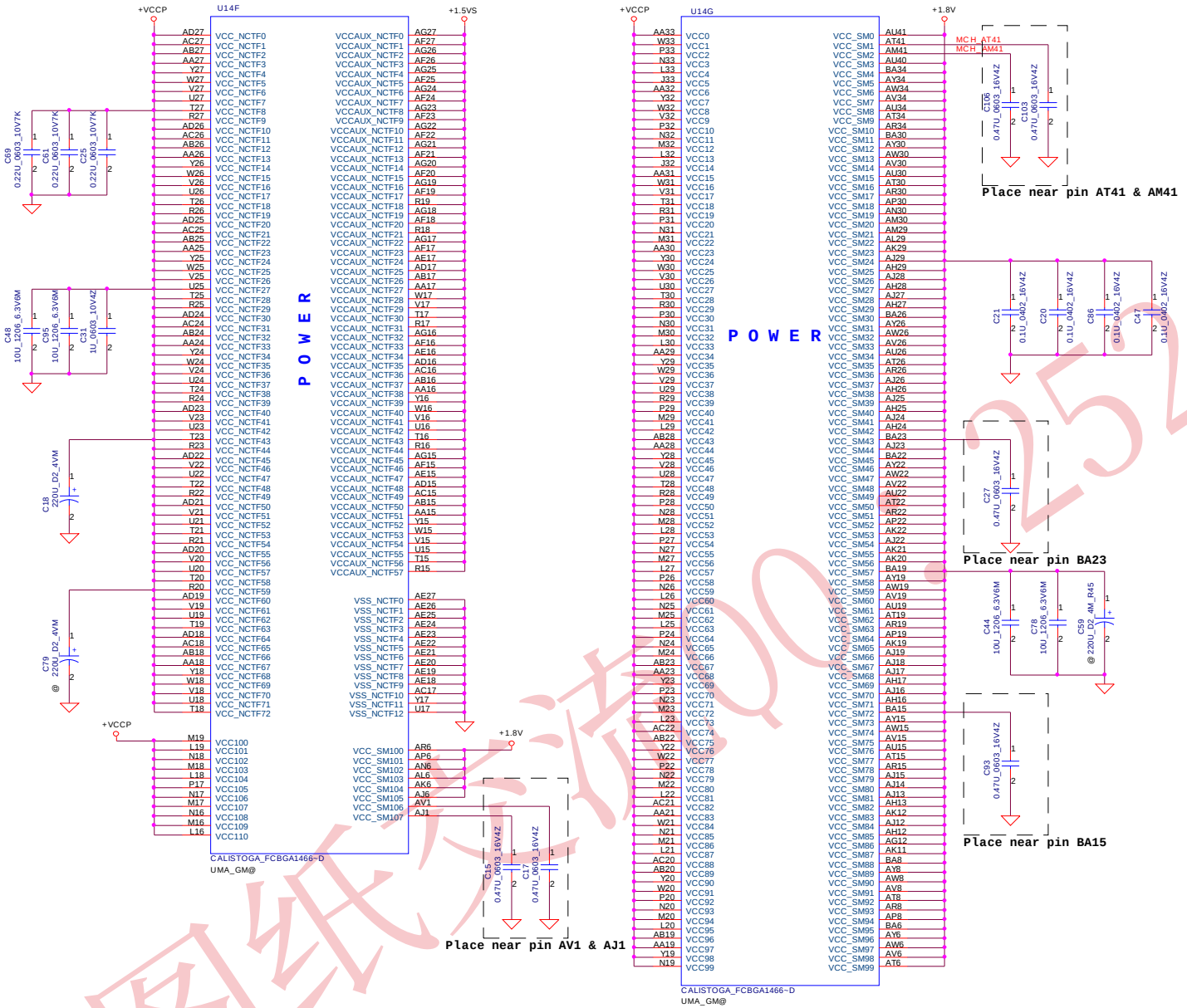

Strap Pin Table

CFG[3:17] have internal pull up

CFG[19:18] have internal pull down

CFG[2:0]	011 = 667MT/s FSB 001 = 533MT/s FSB
CFG5	0 = DMI x 2 1 = DMI x 4*(Default)
CFG7	0 = Reserved 1 = Mobile Yonah CPU*(Default)
CFG9	0 = Lane Reversal Enable 1 = Normal Operation (Default)*
CFG6 PSB 4X CLK Enable	0 = Reserved 1 = Calistoga *
CFG[13:12]	00 = Reserved 01 = XOR Mode Enabled 10 = All Z Mode Enabled 11 = Normal Operation *(Default)
CFG16	0 = Dynamic ODT Disabled 1 = Dynamic ODT Enabled *(Default)
CFG10 CFG18	10 = 1.05V*(Default) 01 = 1.5V
CFG19	0 = Normal Operation. * (Default) 1 = DMI Lane Reversal Enable
SDVO_CTRLDATA	0 = No SDVO Device Present * (Default) 1 = SDVO Device Present
CFG20 (PCIE/SDVO select)	0 = Only PCIE or SDVO is operational. *(Default) 1 = PCIE/SDVO are operating simu.

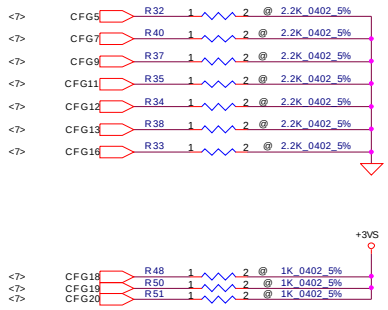

Security Classification	Compal Secret Data		
Issued Date	2005/10/06	Deciphered Date	2006/10/06

Compal Electronics, Inc.

Title: Calistoga (5/6)

Size: Custom | Document Number: HGT30/31 LA-3061 | Rev: 0.1

Date: 星期四, 二月 23, 2006 | Sheet 11 of 47

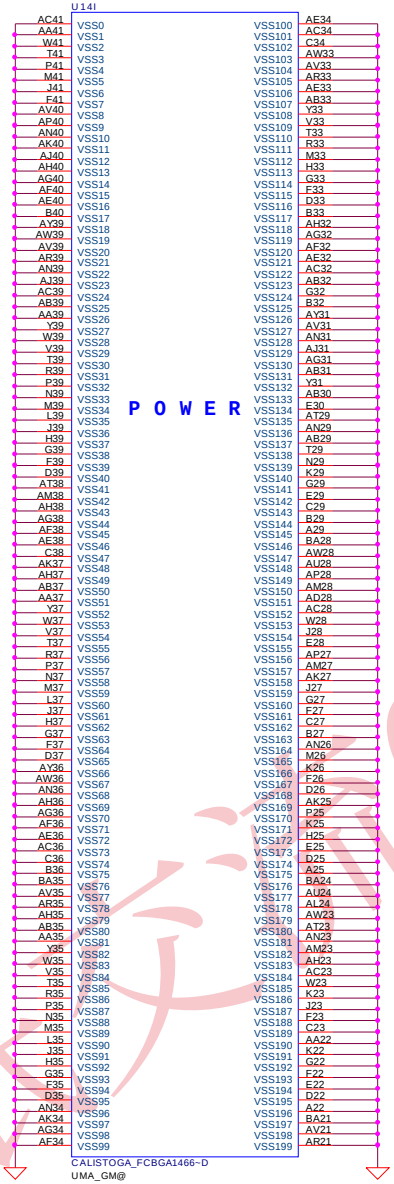

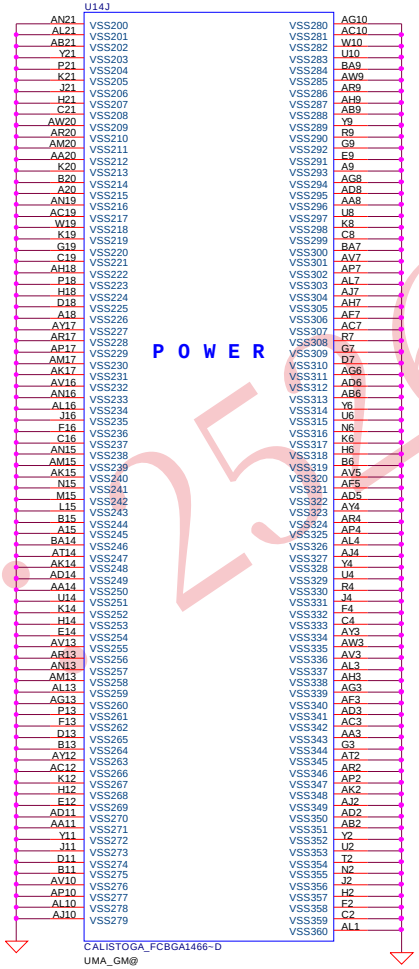

Security Classification	Compal Secret Data		
Issued Date	2005/10/06	Deciphered Date	2006/10/06

Compal Electronics, Inc.

Title: **Calistoga (6/6)**

Size: Custom | Document Number: *HGT30/31 LA-3061* | Rev: 0.1

Date: 星期四, 二月 23, 2006 | Sheet 12 of 47

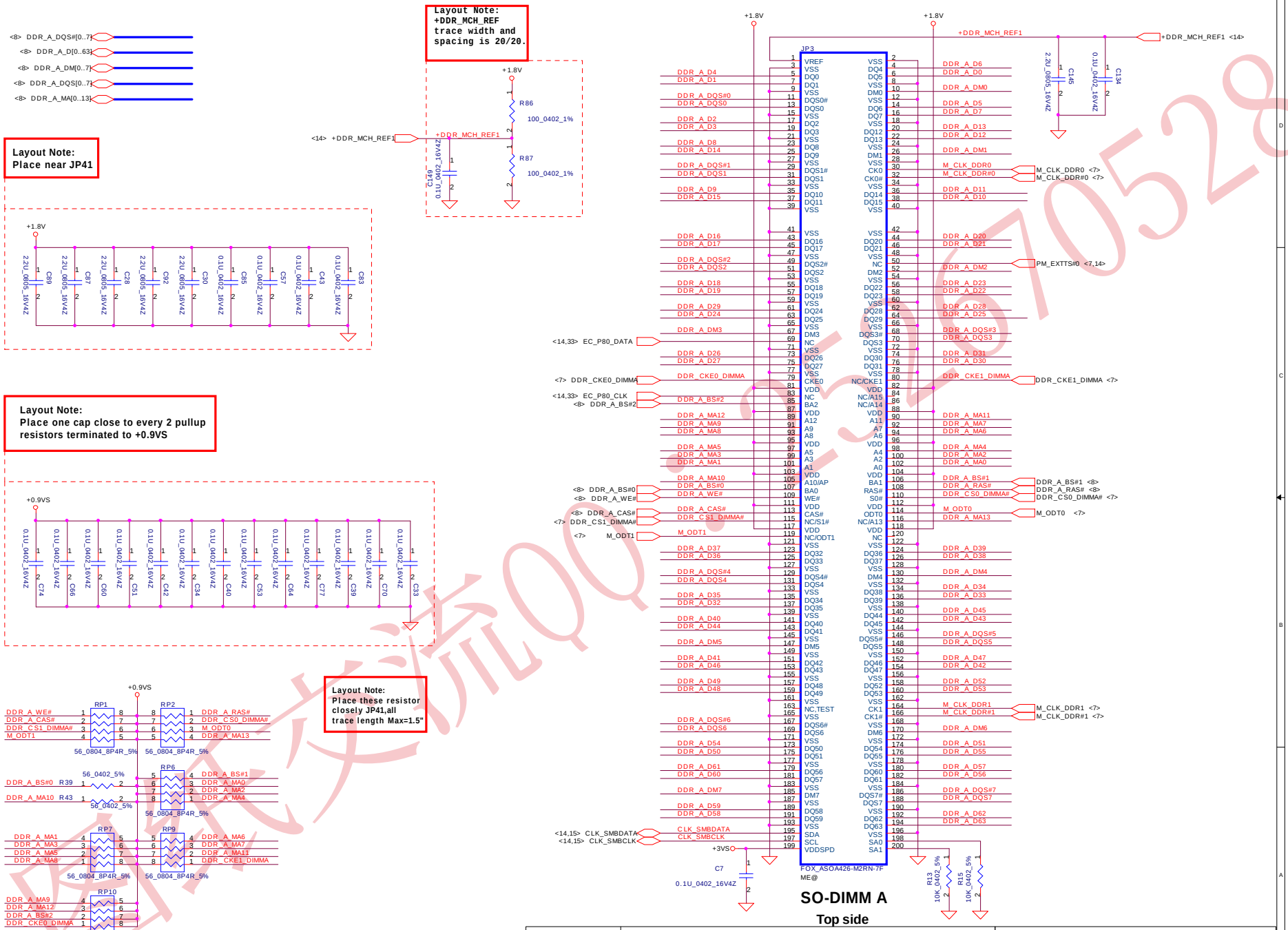

Security Classification	Compal Secret Data		
Issued Date	2005/10/06	Deciphered Date	2006/10/06

Compal Electronics, Inc.

Title: DDRII-SODIMM SLOT1

Size: Custom | Document Number: HGT30/31 LA-3061 | Rev: 0.1

Date: 星期四, 二月 23, 2006 | Sheet 13 of 47

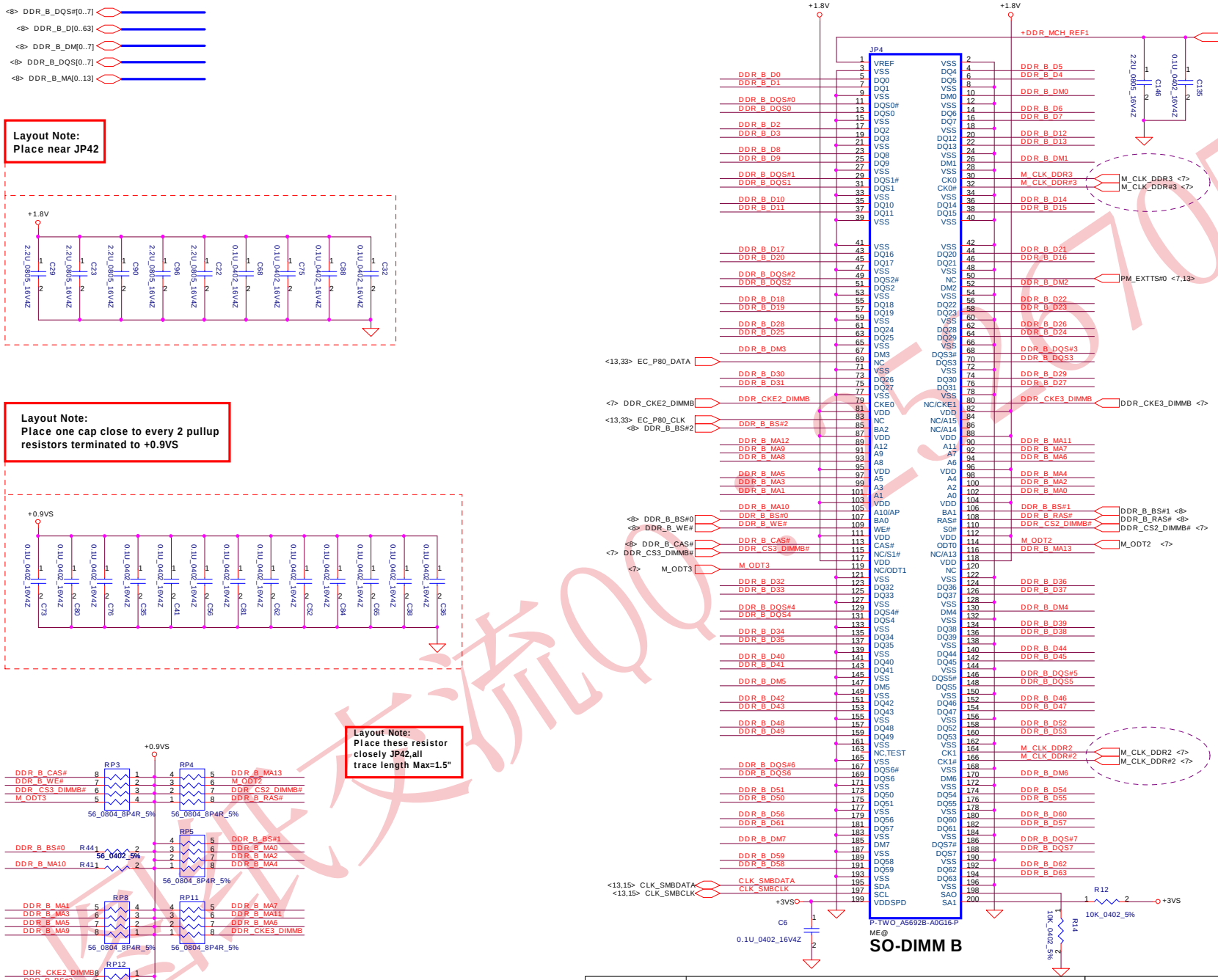

Security Classification	Compal Secret Data		
Issued Date	2005/10/06	Deciphered Date	2006/10/06

Compal Electronics, Inc.

Title: DDRII-SODIMM SLOT2

Size | Document Number: HGT30/31 LA-3061 | Rev 0.1

Date: 星期四, 二月 23, 2006 | Sheet 14 of 47

FSLC CLKSEL2	FSLB CLKSEL1	FSLA CLKSEL0	CPU MHz	SRC MHz	PCI MHz
0	0	1	133	100	33.3
0	1	1	166	100	33.3

Table : ICS954306

FSB Frequency Selet:

CPU Driven *(Default)	Stuff	CLK_Ra CLK_Rb CLK_Rc
	No Stuff	CLK_Rd CLK_Re CLK_Rf
533MHz	Stuff	CLK_Rd CLK_Re CLK_Rf
	No Stuff	CLK_Ra CLK_Rb CLK_Rc
667MHz	Stuff	CLK_Rd CLK_Rf
	No Stuff	CLK_Ra CLK_Rb CLK_Rc CLK_Re

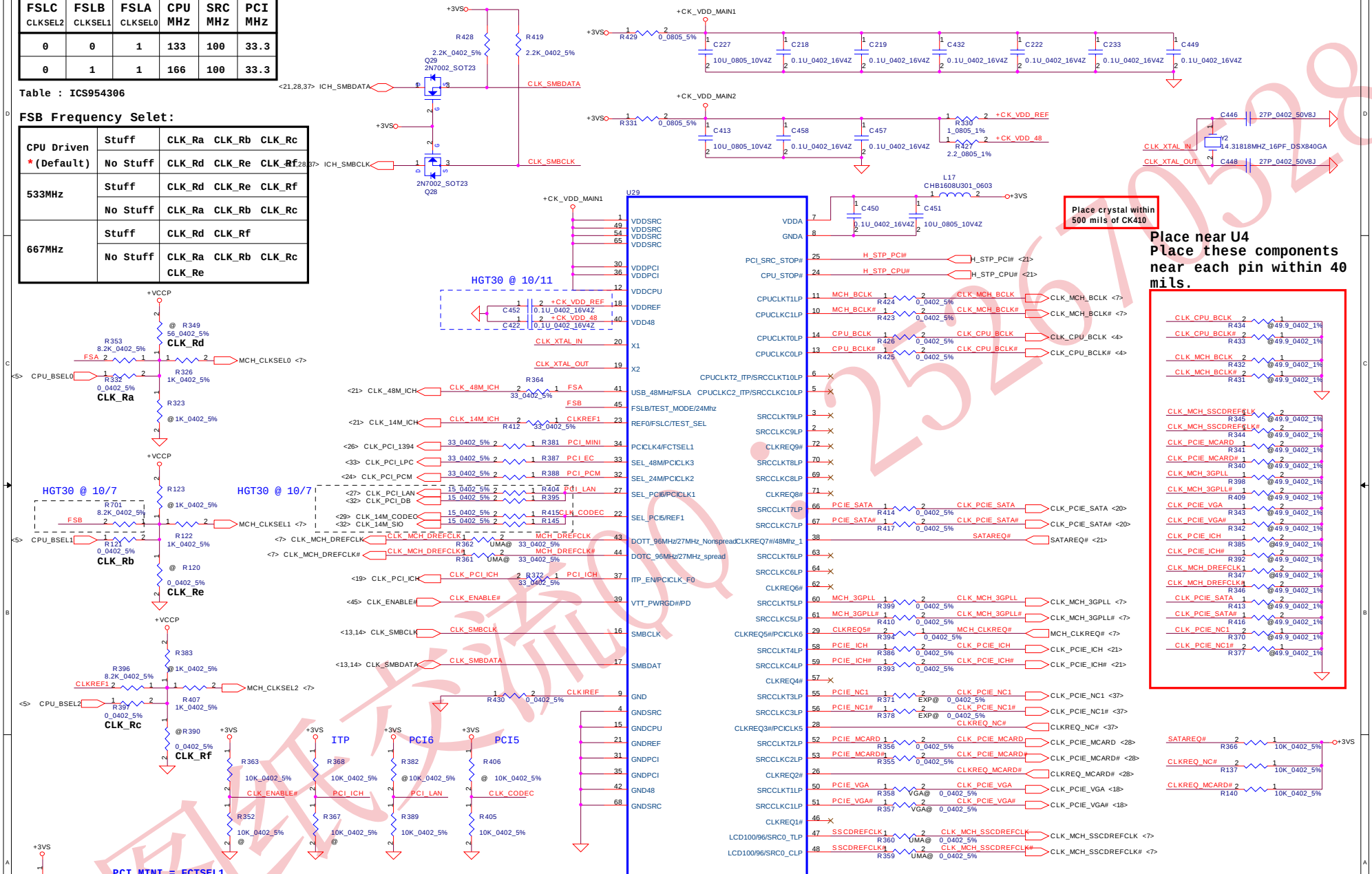

FCTSEL1 (PIN34)	PIN43	PIN44	PIN47	PIN48
0	DOT96T	DOT96C	96/100M_T	96/100M_C
1	27Mout	27MSSout	SRCT0	SRCC0

PCI_LAN	PIN27
0	CLKREQ5
1	PCICLK6

Security Classification	Compal Secret Data		
Issued Date	2005/10/06	Deciphered Date	2006/10/06

Compal Electronics, Inc.

Title: **Clock generator**

Size | Document Number: HGT30/31 LA3061 | Rev 0.1

Date: 星期四, 二月 23, 2006 | Sheet 15 of 47

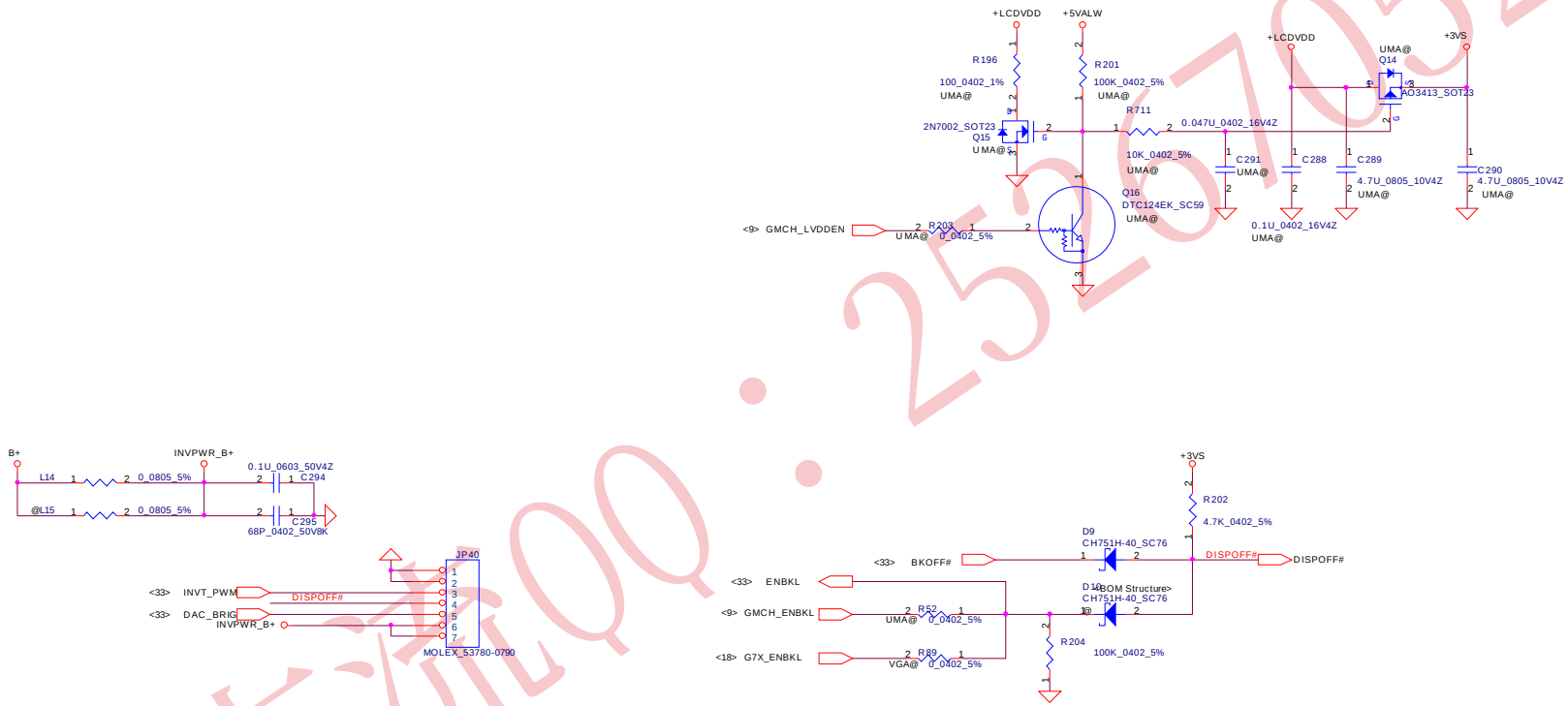

Security Classification	Compal Secret Data		
Issued Date	2005/10/06	Deciphered Date	2006/10/06

Compal Electronics, Inc.

Title: **LVDS Connector**

Size: Custom | Document Number: HGT30/31 LA3061 | Rev: 0.1

Date: 星期四, 二月 23, 2006 | Sheet 16 of 47

TV-OUT Conn.

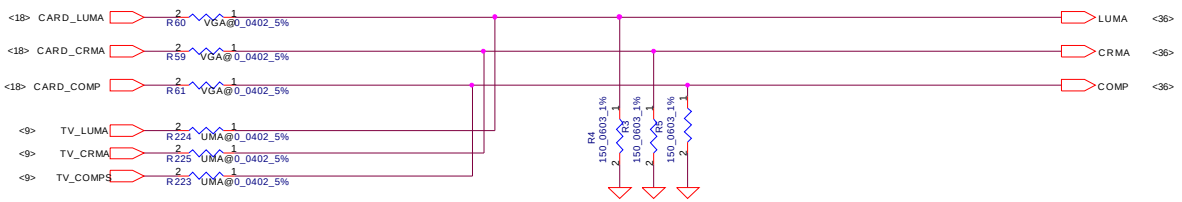

Pop when with internal graphics

CRT Conn.

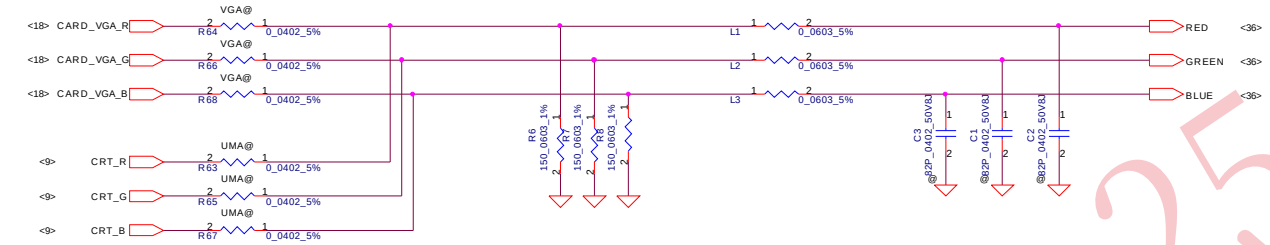

Pop when with internal graphics

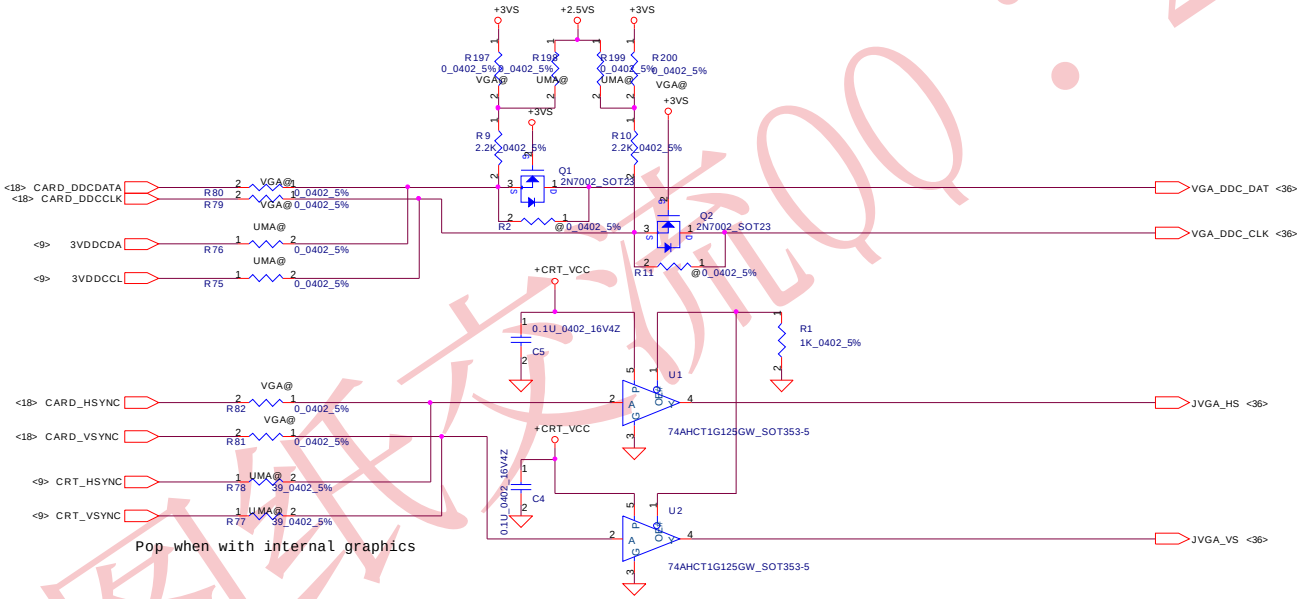

Pop when with internal graphics

Security Classification	Compal Secret Data		
Issued Date	2005/10/06	Deciphered Date	2006/10/06

Compal Electronics, Inc.

Title: **CRT & TVout**

Size: Custom | Document Number: HGT30/31 LA3061 | Rev: 0.1

Date: 星期四, 二月 23, 2006 | Sheet 17 of 47

MAX. 4.06A @ 1.8V
MAX. 130mA @ 2.5V
MAX. 655mA @ 3.3V

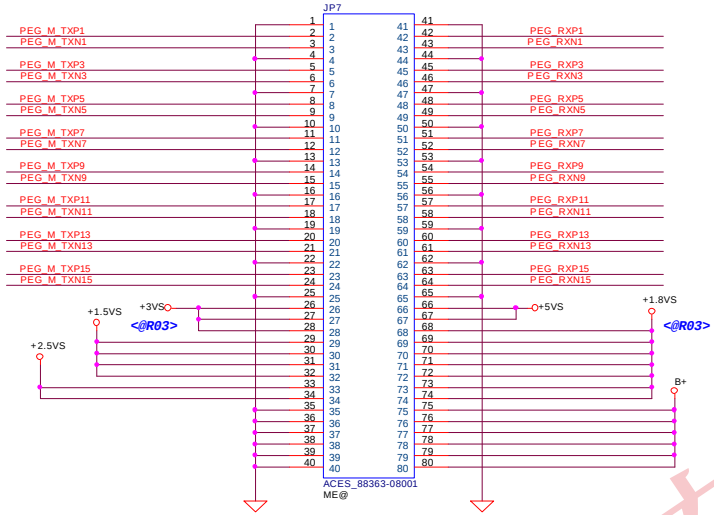

< New Add Pin.28 for +3VS, Pin.68 for +1.8VS @R03 >

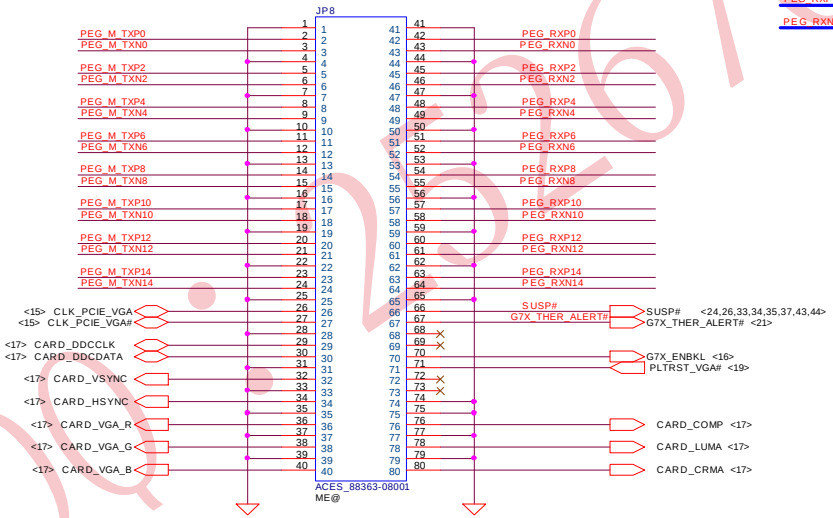

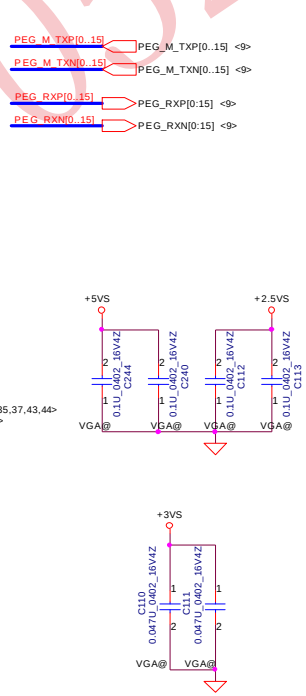

Compal Electronics, Inc.			
Title: VGA/B connector			
Size: Custom	Document Number: HGT30/31 LA3061		Rev: 0.1
Date: 星期四, 二月 23, 2006		Sheet 18 of 47	

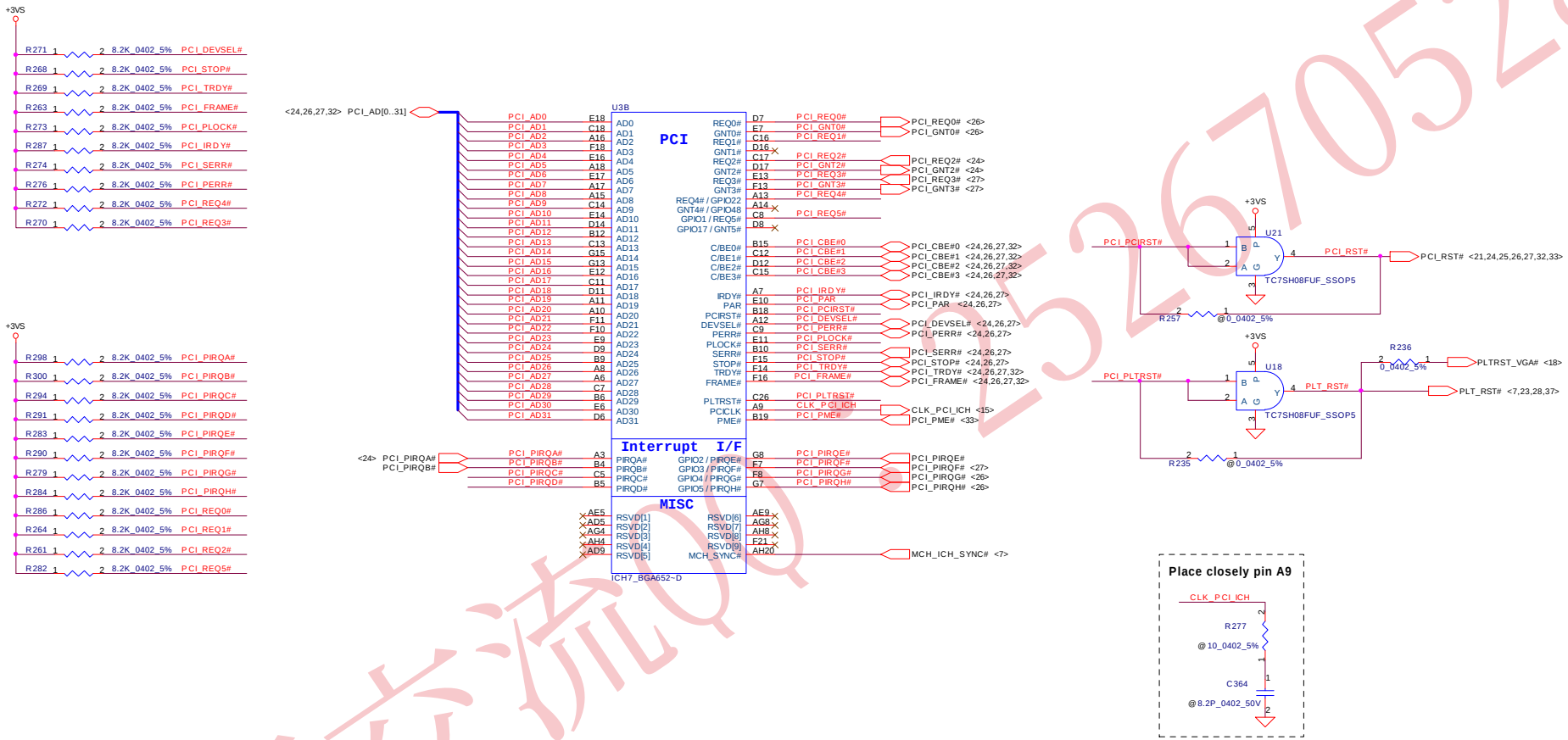

Security Classification	Compal Secret Data		
Issued Date	2005/10/06	Deciphered Date	2006/10/06

Compal Electronics, Inc.

Title: ICH7-M(1/4)

Size	Document Number	Rev
	HGT30/31 LA3061	0.1

Date: 星期四, 二月 23, 2006 Sheet 19 of 47

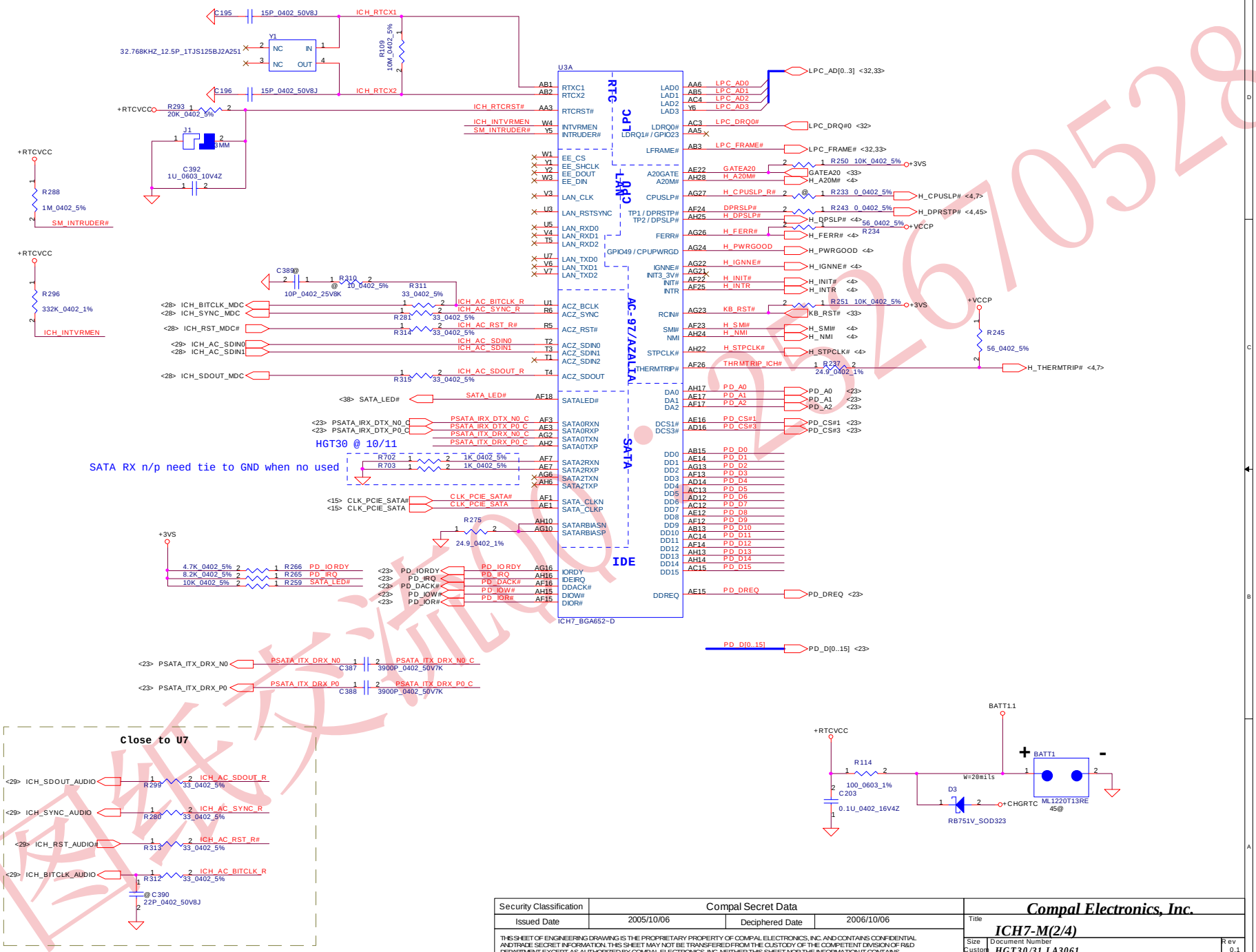

Security Classification	Compal Secret Data		
Issued Date	2005/10/06	Deciphered Date	2006/10/06

Compal Electronics, Inc.

Title: ICH7-M(2/4)

Size: Custom | Document Number: HGT30/31 LA3061 | Rev: 0.1

Date: 星期四, 二月 23, 2006 | Sheet 20 of 47

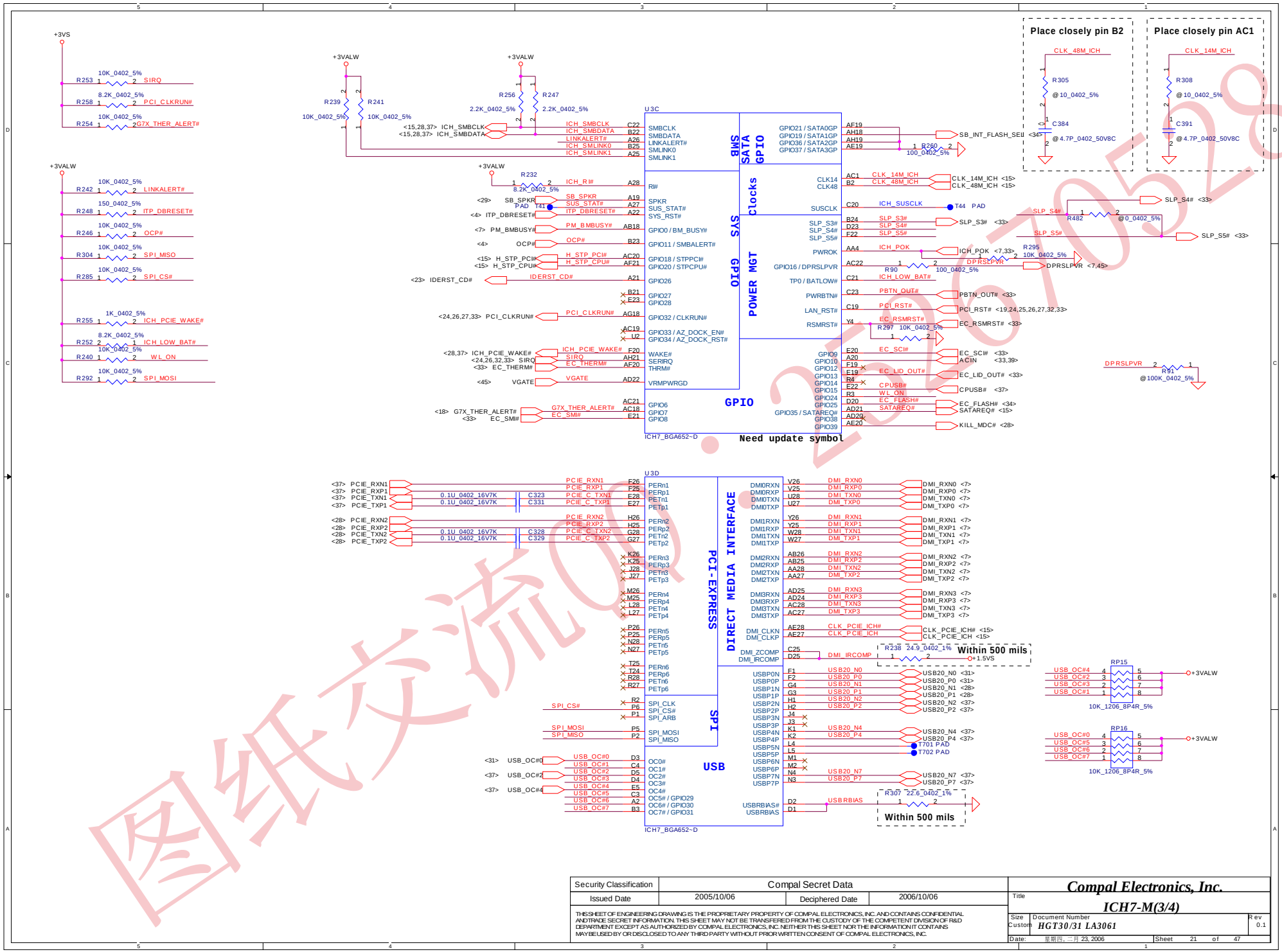

Security Classification	Compal Secret Data		
Issued Date	2005/10/06	Deciphered Date	2006/10/06

Compal Electronics, Inc.

Title: **ICH7-M(3/4)**

Size: Custom | Document Number: HGT30/31 LA3061 | Rev: 0.1

Date: 星期四, 二月 23, 2006 | Sheet 21 of 47

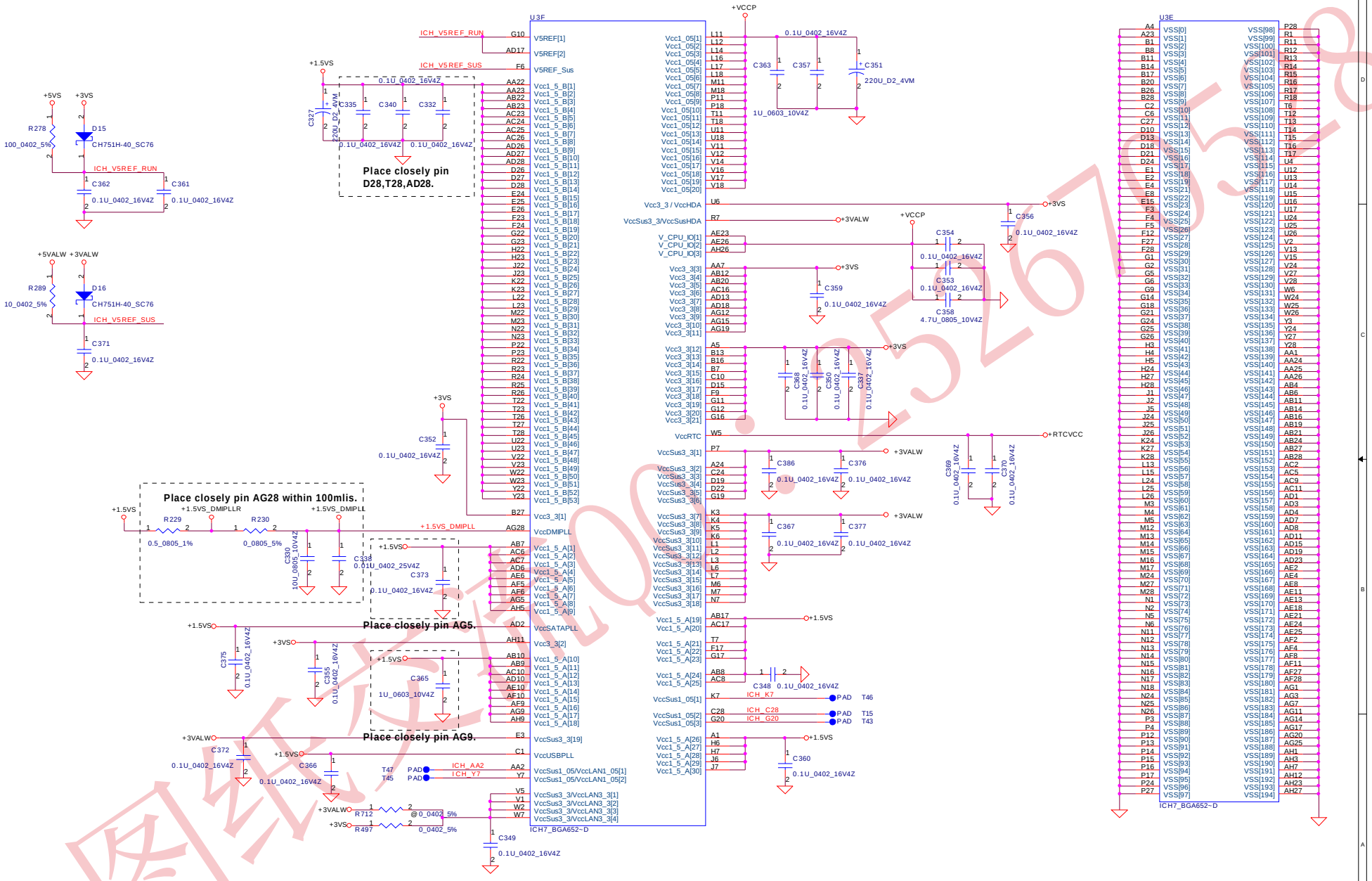

Security Classification	Compal Secret Data		
Issued Date	2005/10/06	Deciphered Date	2006/10/06

Compal Electronics, Inc.

Title: **ICH7-M(4/4)**

Size: Custom | Document Number: HGT30/31 LA3061 | Rev: 0.1

Date: 星期四, 二月 23, 2006 | Sheet 22 of 47

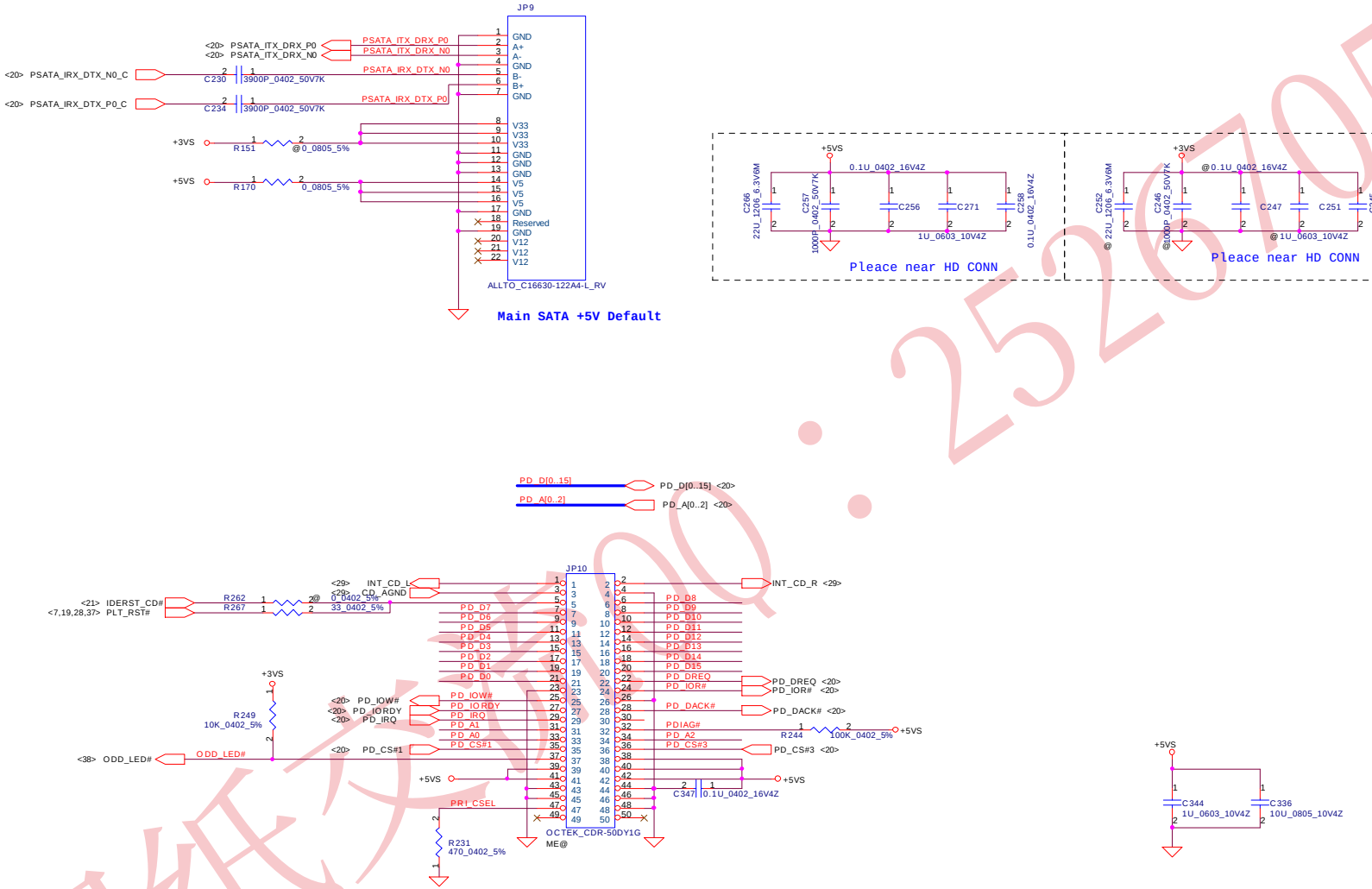

Security Classification	Compal Secret Data		
Issued Date	2005/10/06	Deciphered Date	2006/10/06

Compal Electronics, Inc.

Title: **HDD & CDROM**

Size: Custom | Document Number: HGT30/31 LA3061 | Rev: 0.1

Date: 星期四, 二月 23, 2006 | Sheet 23 of 47

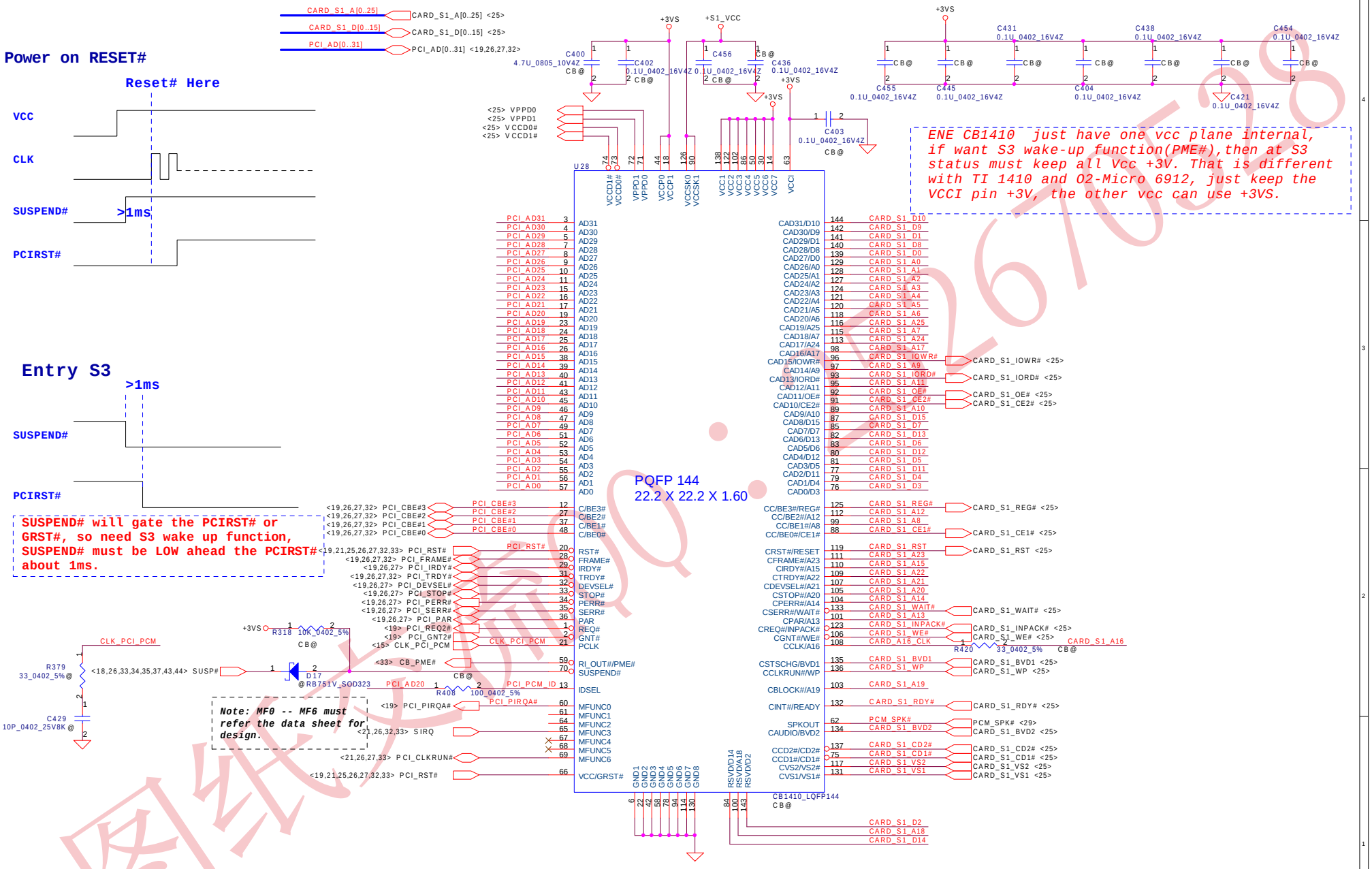

Security Classification	Compal Secret Data		
Issued Date	2005/10/06	Deciphered Date	2006/10/06

PROPRIETARY NOTE

Compal Electronics, Inc.

Title: **CB ENE1410(One Solt)**

Size: Custom | Document Number: ***HGT30/31 LA3061*** | Rev: 0.1

Date: 星期四, 6月 23, 2006 | Sheet 24 of 47

PCMCIA Power Controller

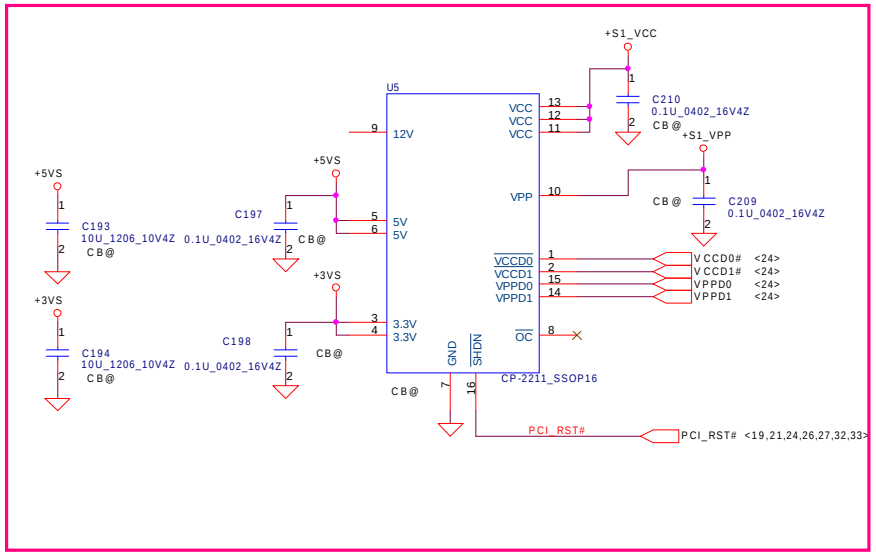

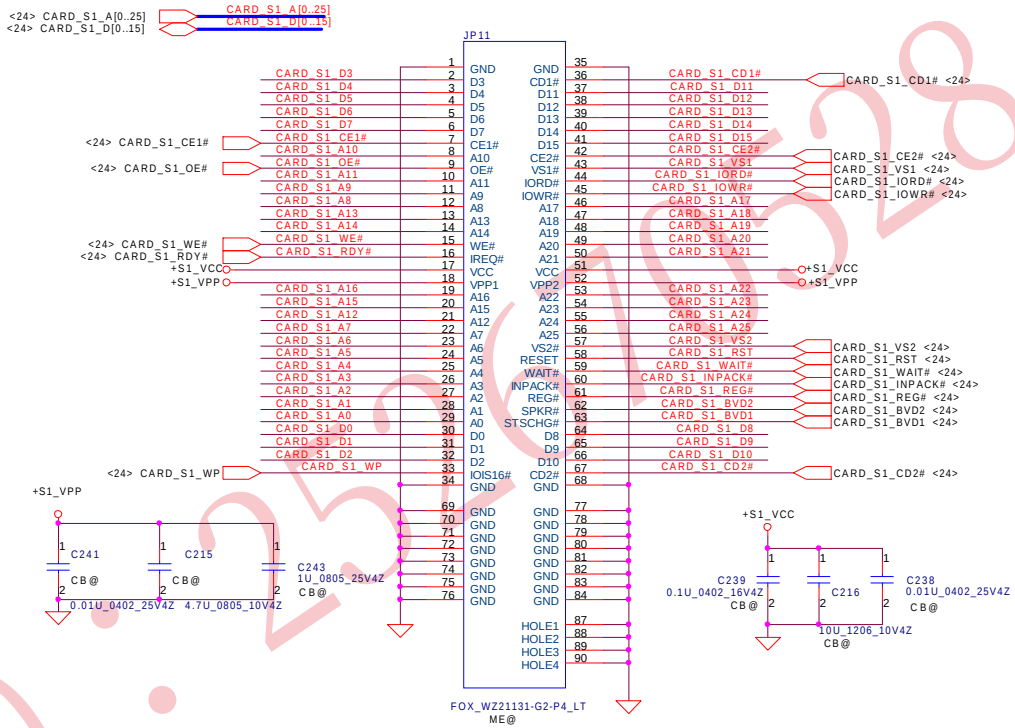

Security Classification	Compal Secret Data		
Issued Date	2005/10/06	Deciphered Date	2006/10/06

Compal Electronics, Inc.

Title: **CardBus Socket**

Size: Custom | Document Number: **HGT30/31 LA3061** | Rev: 0.1

Date: 星期四, 6月 23, 2006 | Sheet 25 of 47

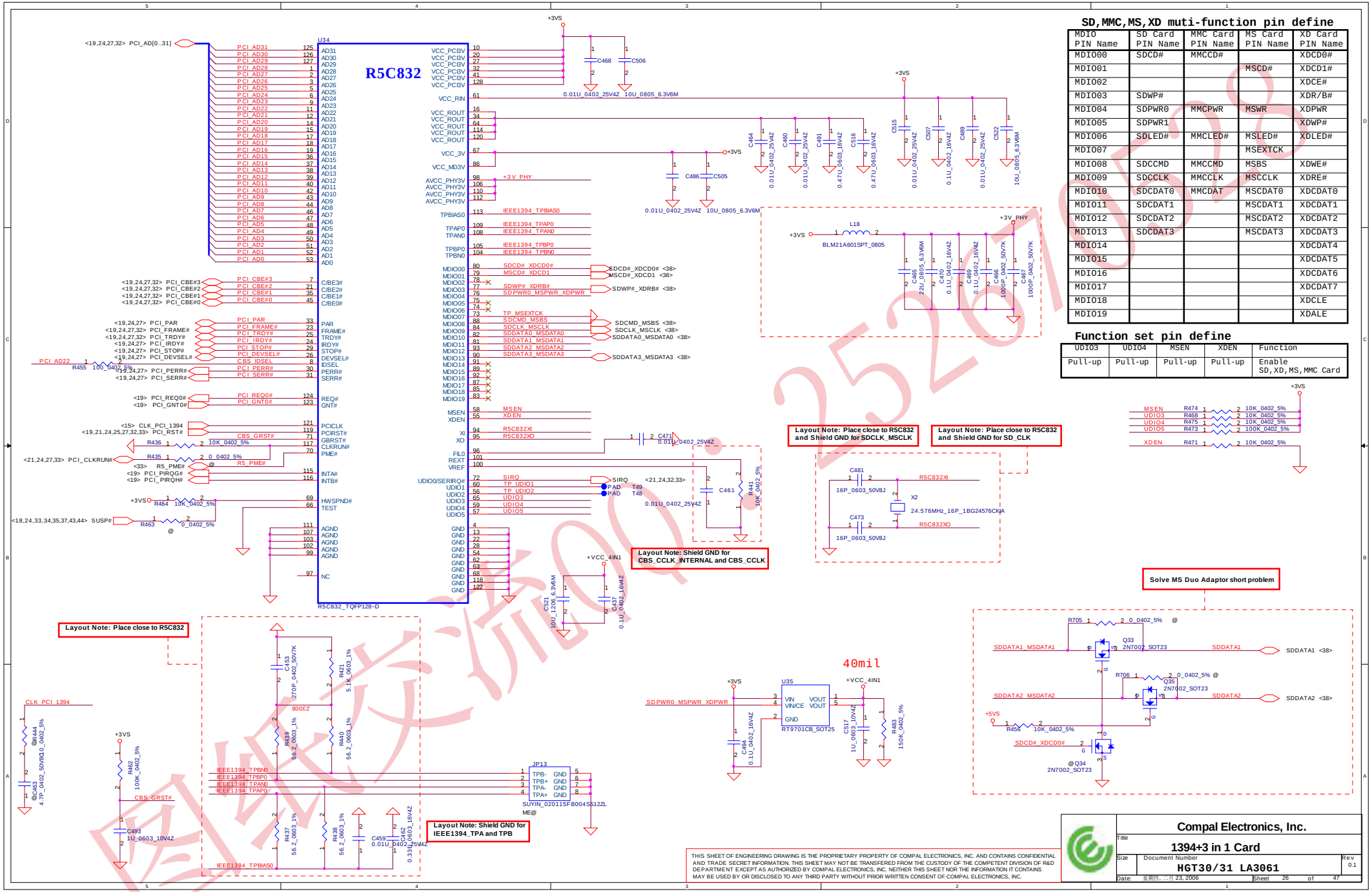

SD,MMC,MS,XD muti-function pin define

MDIO PIN Name	SD Card PIN Name	MMC Card PIN Name	MS Card PIN Name	XD Card PIN Name
MDIO00	SDCD#	MMCCD#		XDCD0#
MDIO01			MSCD#	XDCD1#
MDIO02				XDCE#
MDIO03	SDWP#			XDR/B#
MDIO04	SDPWR0	MMCPWR	MSWR	XDPWR
MDIO05	SDPWR1			XDWP#
MDIO06	SDLED#	MMCLED#	MSLED#	XDLED#
MDIO07			MSEXTCK	
MDIO08	SDCCMD	MMCCMD	MSBS	XDWE#
MDIO09	SDCCLK	MMCCLK	MSCCLK	XDRE#
MDIO10	SDCDAT0	MMCDAT	MSCDAT0	XDCDAT0
MDIO11	SDCDAT1		MSCDAT1	XDCDAT1
MDIO12	SDCDAT2		MSCDAT2	XDCDAT2
MDIO13	SDCDAT3		MSCDAT3	XDCDAT3
MDIO14				XDCDAT4
MDIO15				XDCDAT5
MDIO16				XDCDAT6
MDIO17				XDCDAT7
MDIO18				XDCLE
MDIO19				XDALE

Function set pin define

UDIO3	UDIO4	MSEN	XDEN	Function
Pull-up	Pull-up	Pull-up	Pull-up	Enable SD,XD,MS,MMC Card

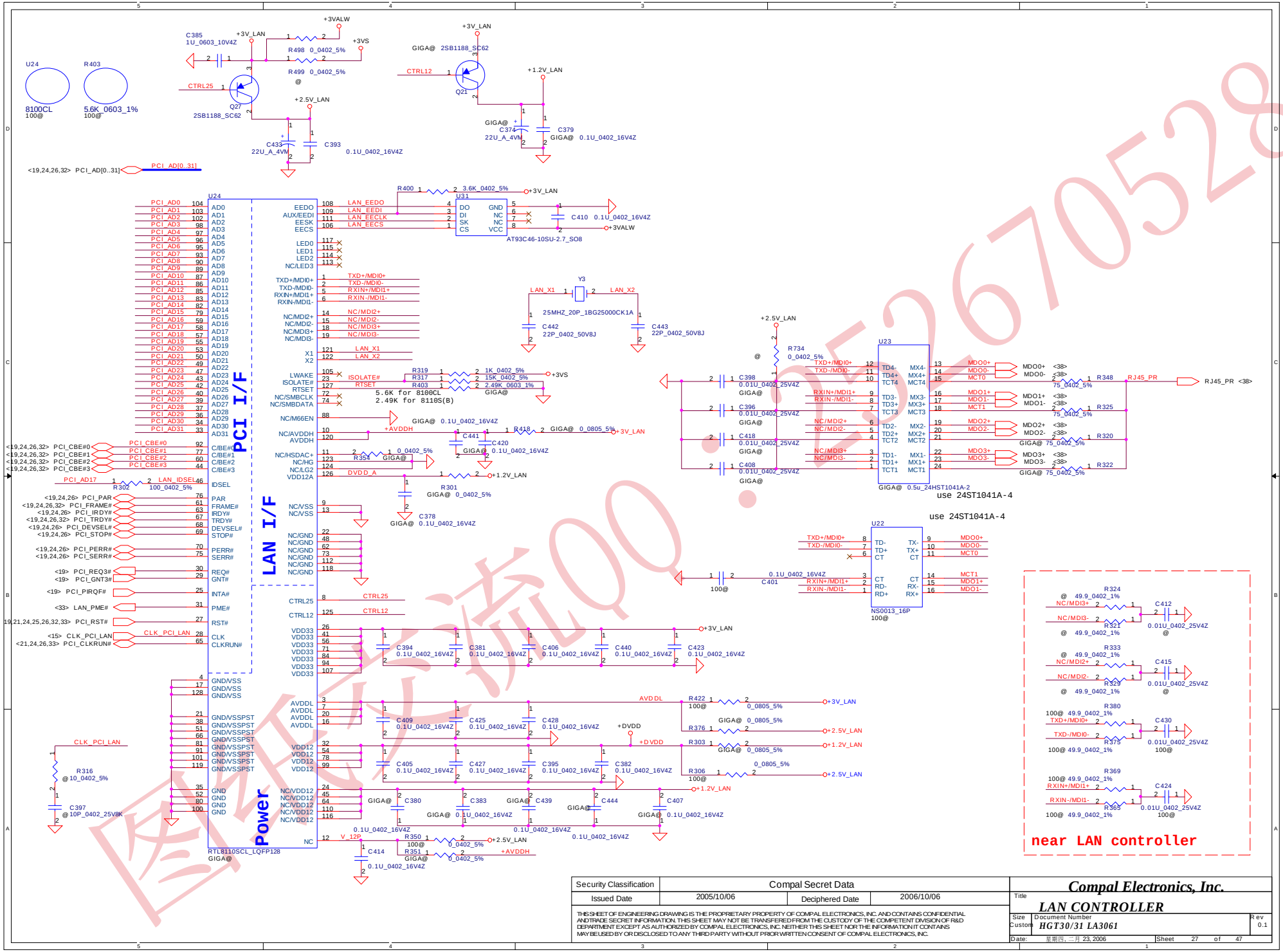

Security Classification	Compal Secret Data		
Issued Date	2005/10/06	Deciphered Date	2006/10/06

Compal Electronics, Inc.

Title: **LAN CONTROLLER**

Size: Custom | Document Number: HGT30/31 LA3061 | Rev: 0.1

Date: 星期四, 二月 23, 2006 | Sheet 27 of 47

Mini-Express Card(Slot 1-WLAN)

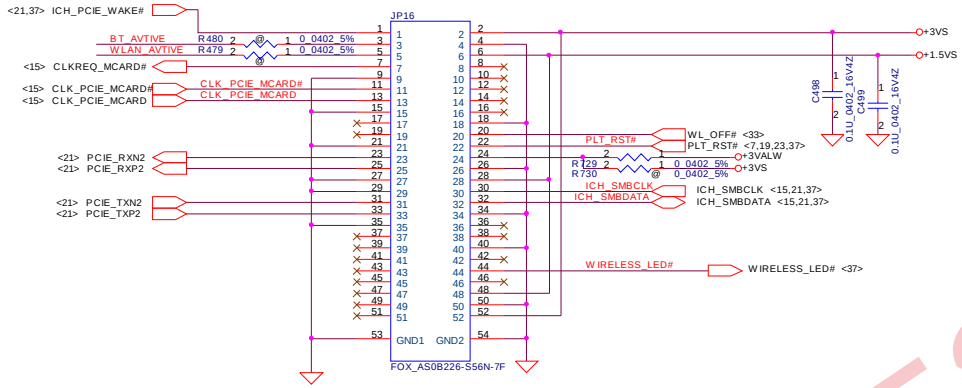

MDC CONN.

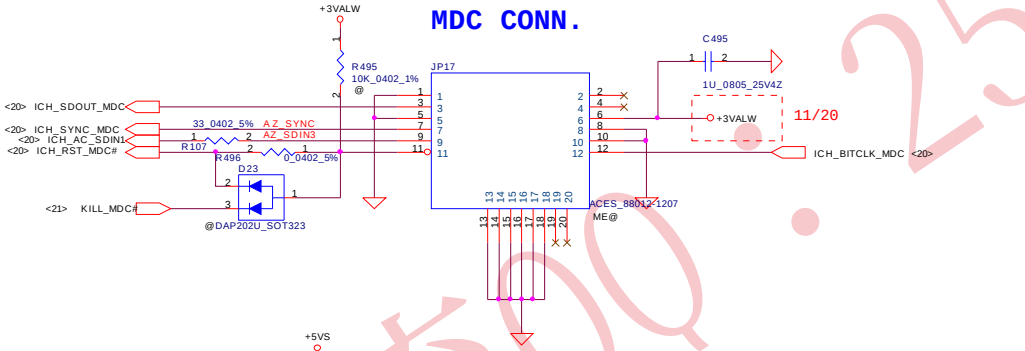

BT MODULE CONN

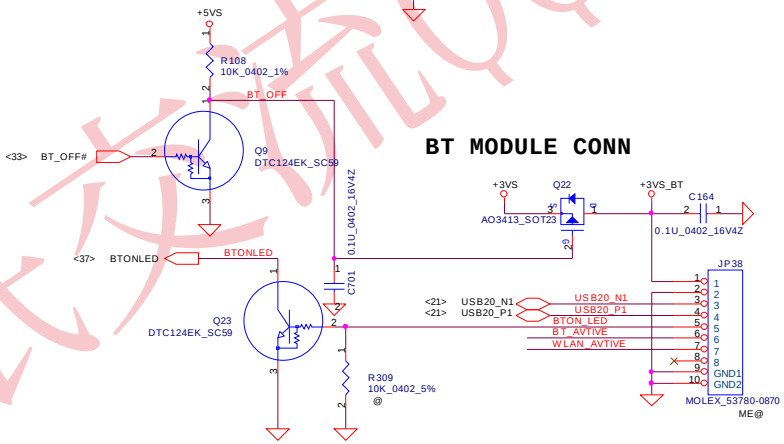

Security Classification	Compal Secret Data		
Issued Date	2005/10/06	Deciphered Date	2006/10/06

Compal Electronics, Inc.

Title: Mini Card / MDC CONN

Size: Custom | Document Number: HGT30/31 LA3061 | Rev: 0.1

Date: 星期四, 二月 23, 2006 | Sheet 28 of 47

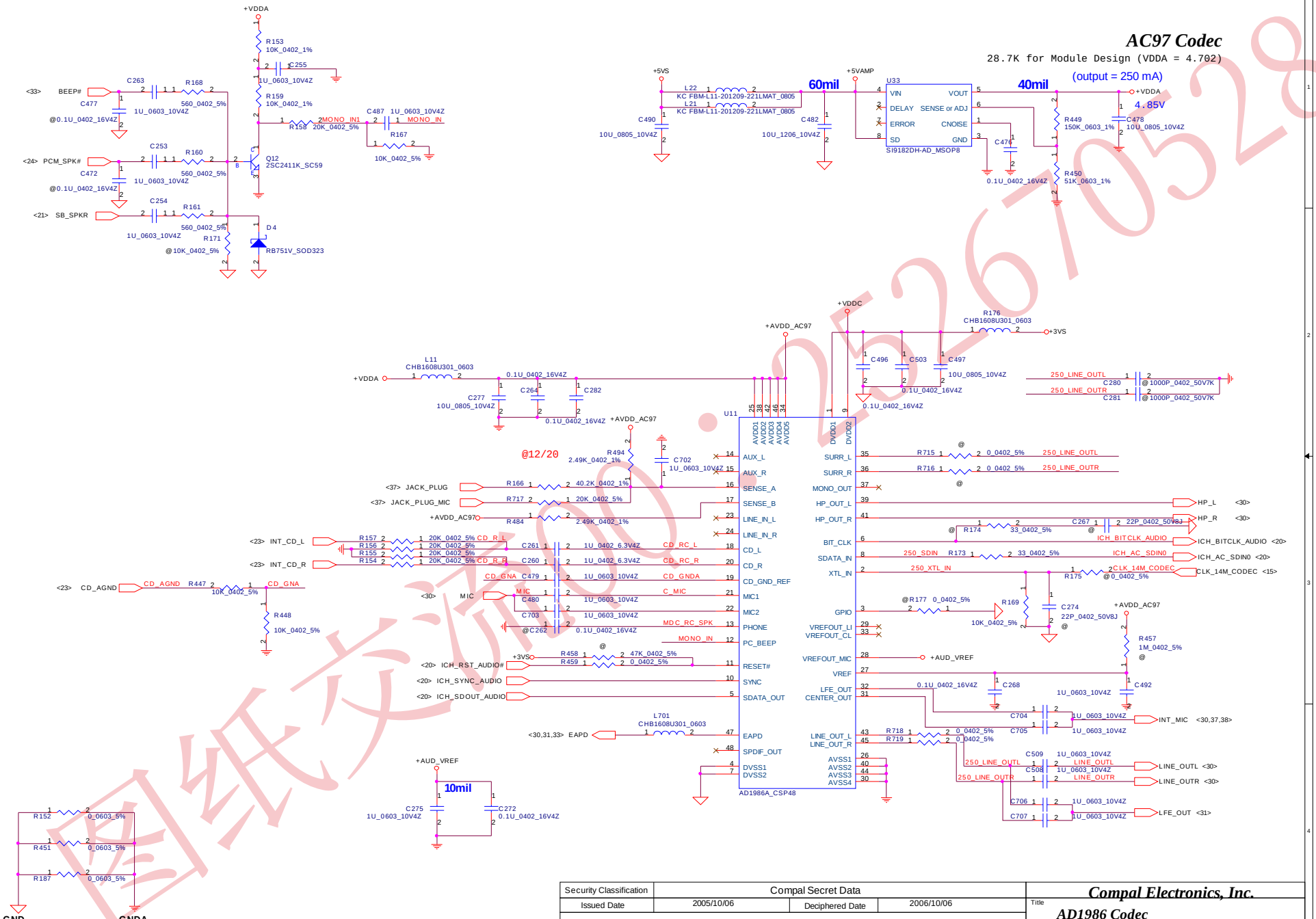

Security Classification	Compal Secret Data		
Issued Date	2005/10/06	Deciphered Date	2006/10/06

Compal Electronics, Inc.

Title: AD1986 Codec

Size: Custom | Document Number: HGT30/31 LA3061 | Rev: 0.1

Date: 星期四, 二月 23, 2006 | Sheet 29 of 47

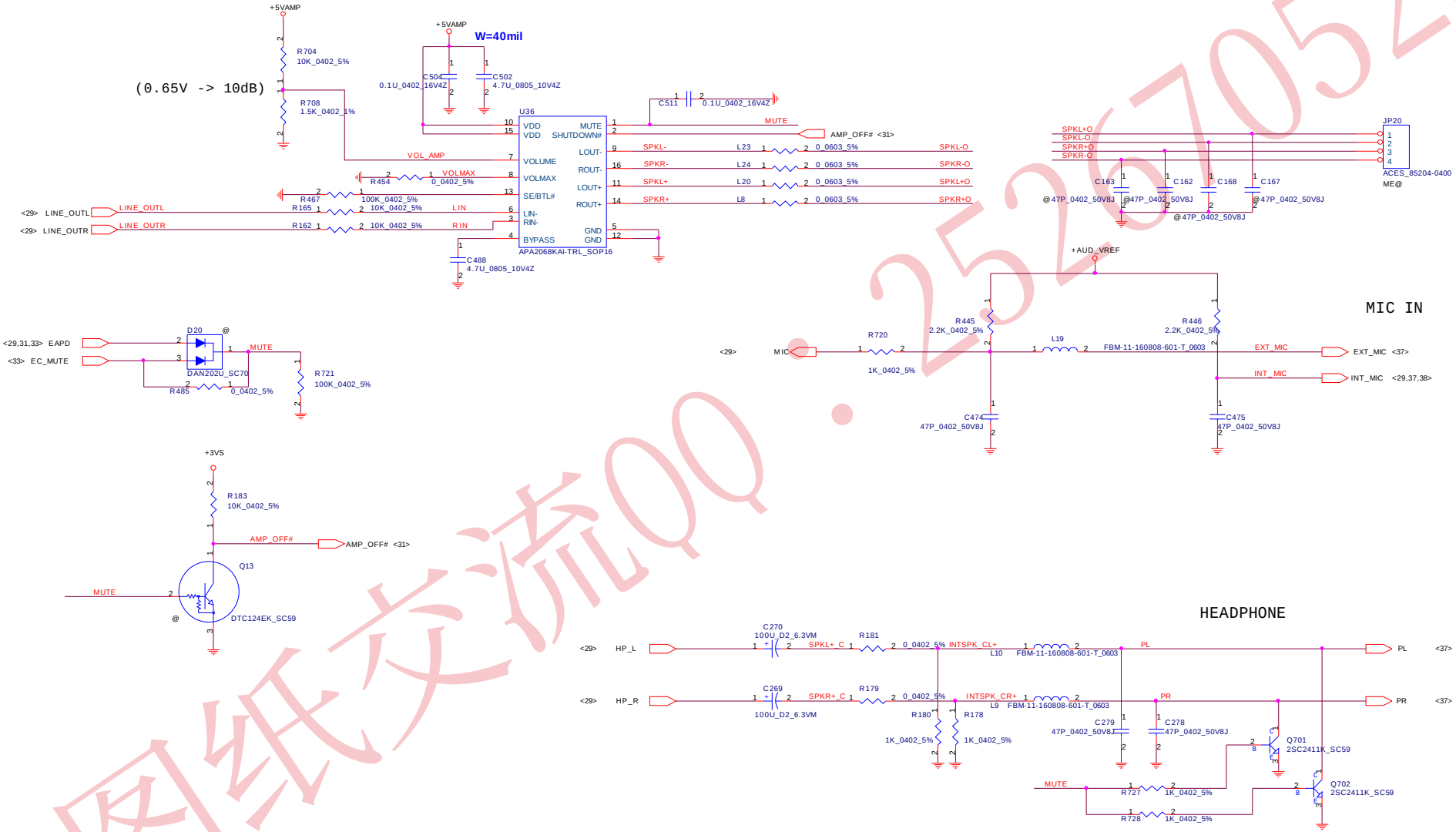

Security Classification	Compal Secret Data		
Issued Date	2005/10/06	Deciphered Date	2006/10/06

Compal Electronics, Inc.

Title: AMP & Audio Jack

Size: Custom | Document Number: HGT30/31 LA3061 | Rev: 0.1

Date: 星期四, 二月 23, 2006 | Sheet 30 of 47

SUBWOOFER (Reserved for C38)

WOOFER@

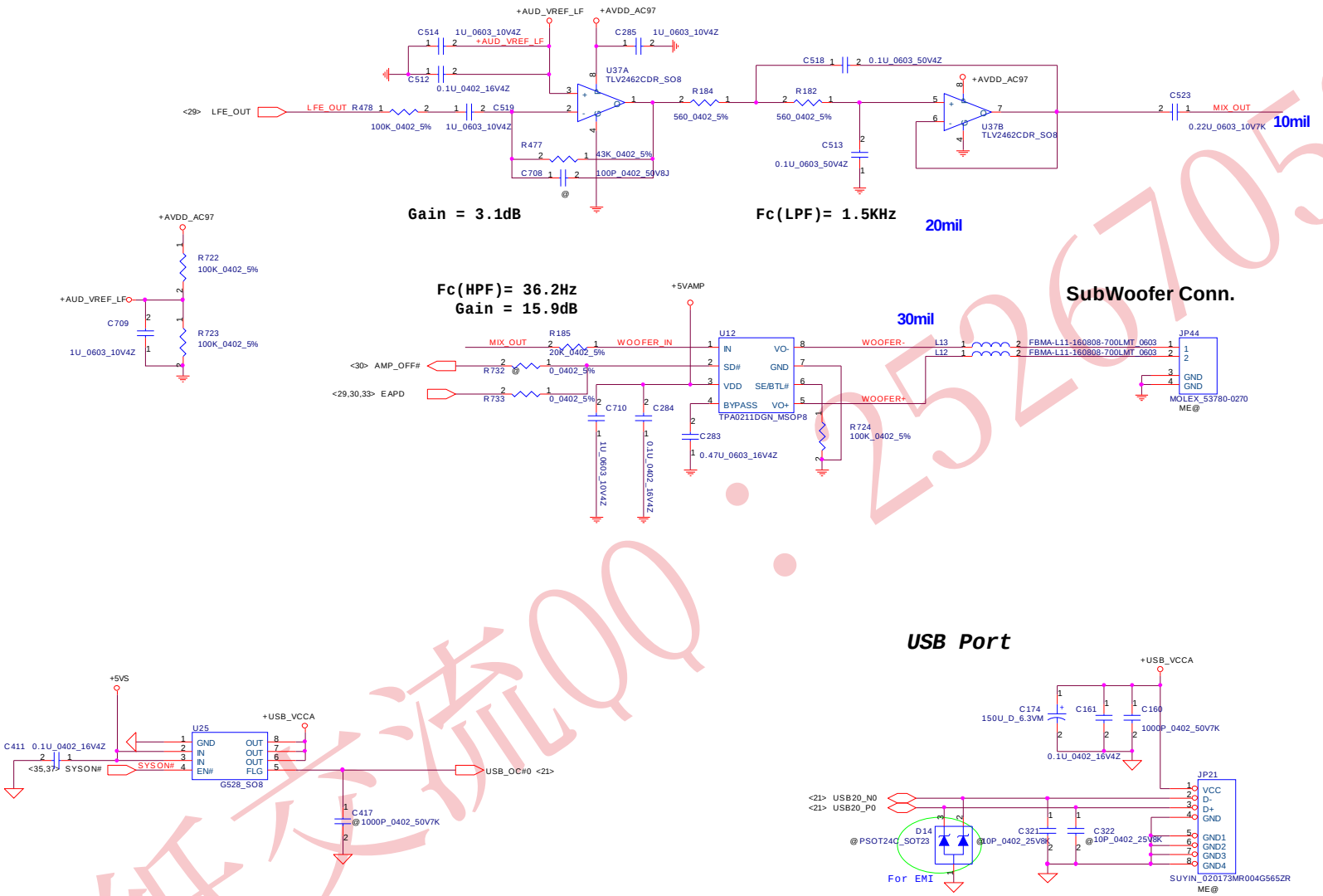

Security Classification	Compal Secret Data		
Issued Date	2005/10/06	Deciphered Date	2006/10/06

Compal Electronics, Inc.

Title: **Bluetooth & USB CONN.**

Size: Custom | Document Number: HGT30/31 LA3061 | Rev: 0.1

Date: 星期四, 二月 23, 2006 | Sheet 31 of 47

INT_KBD CONN.(TYPE "D" KB)

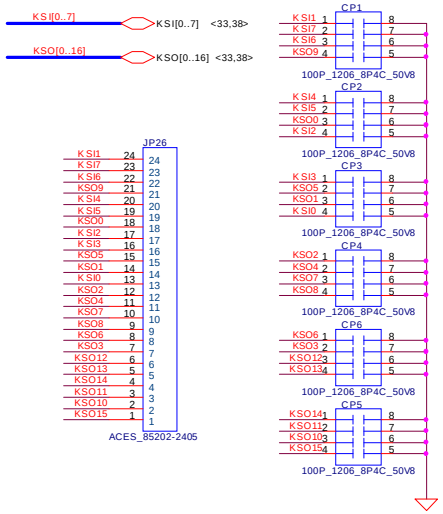

Power BTN

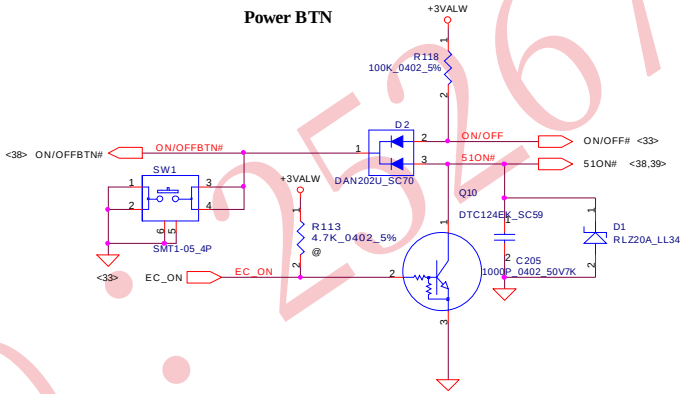

FOR LPC SIO DEBUG PORT

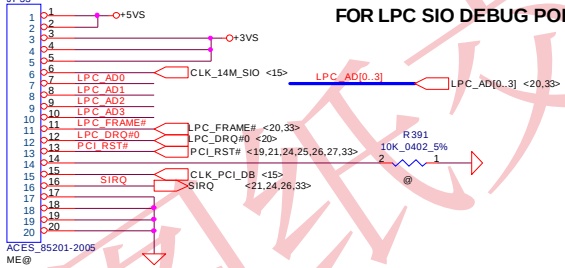

DEBUG PORT

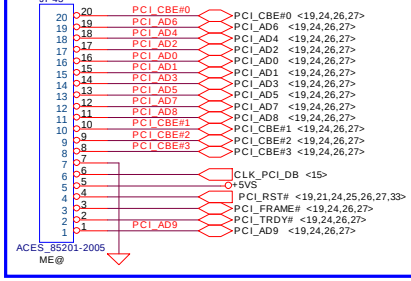

Security Classification	Compal Secret Data		
Issued Date	2005/10/06	Deciphered Date	2006/10/06

Compal Electronics, Inc.

Title: **KBD,ON/OFF,T/P,LED/B,DEBUG**

Size: Custom | Document Number: HGT30/31 LA3061 | Rev: 0.1

Date: 星期四, 二月 23, 2006 | Sheet 32 of 47

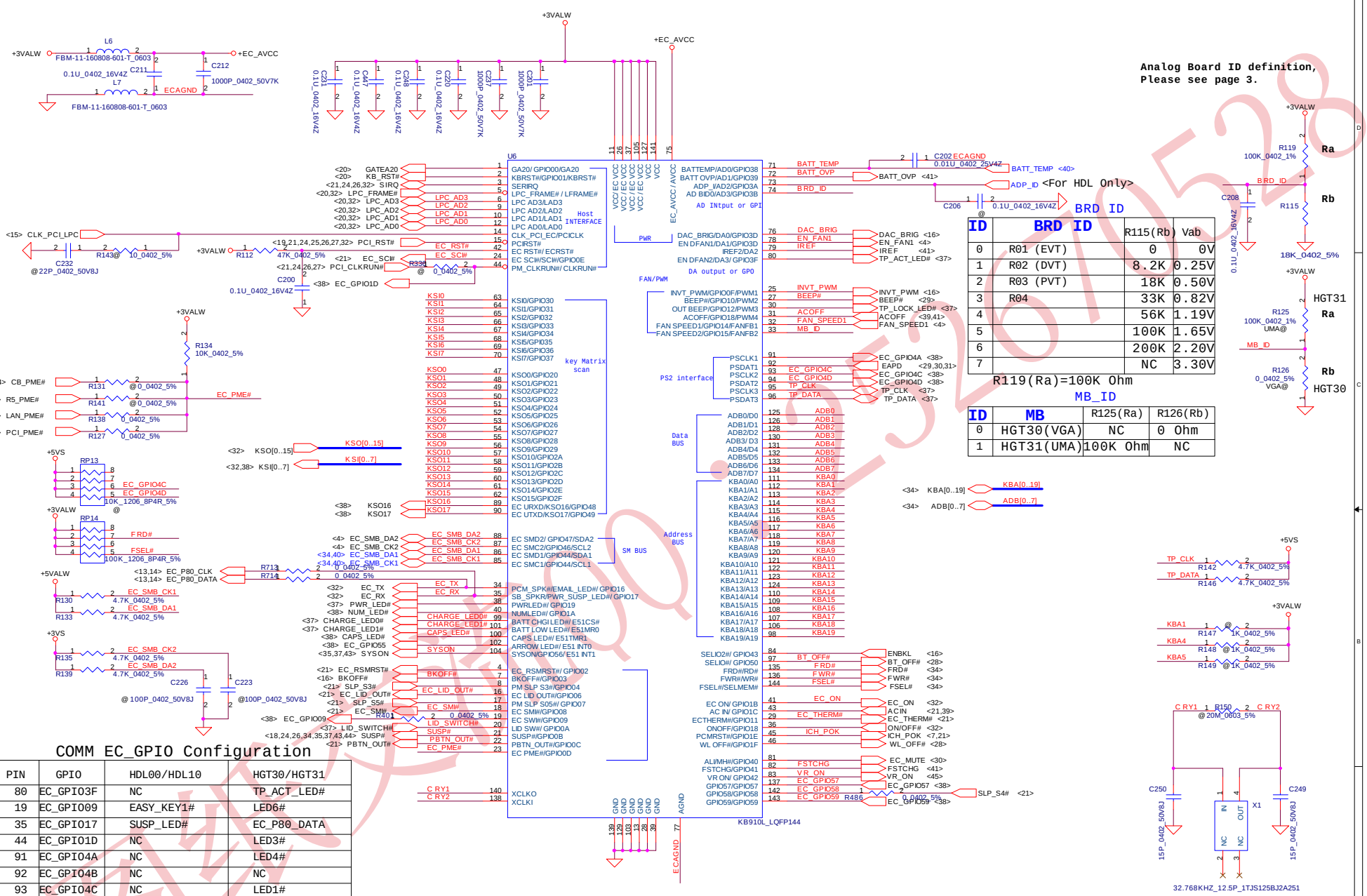

BRD ID

ID	BRD ID	R115(Rb)	Vab
0	R01 (EVT)	0	0V
1	R02 (DVT)	8.2K	0.25V
2	R03 (PVT)	18K	0.50V
3	R04	33K	0.82V
4		56K	1.19V
5		100K	1.65V
6		200K	2.20V
7		NC	3.30V

MB_ID

ID	MB	R125(Ra)	R126(Rb)
0	HGT30(VGA)	NC	0 Ohm
1	HGT31(UMA)	100K Ohm	NC

COMM EC_GPIO Configuration

PIN	GPIO	HDL00/HDL10	HGT30/HGT31
80	EC_GPIO3F	NC	TP_ACT_LED#
19	EC_GPIO09	EASY_KEY1#	LED6#
35	EC_GPIO17	SUSP_LED#	EC_P80_DATA
44	EC_GPIO1D	NC	LED3#
91	EC_GPIO4A	NC	LED4#
92	EC_GPIO4B	NC	NC
93	EC_GPIO4C	NC	LED1#
94	EC_GPIO4D	NC	LED2#
102	EC_GPIO55	NC	LED5#
97	EC_GPIO50	MEDIA#	BT_OFF#
137	EC_GPIO57	VOL_UP#	NOVO_BTN#
142	EC_GPIO58	VOL_DOWN#	SLP_S4#
143	EC_GPIO59	KILL_SW#	WIRE_LAN_BTN#
30	EC_GPIO12	AMP_MUTE	TP_LOCK_LED#

Security Classification	Compal Secret Data		
Issued Date	2005/10/06	Deciphered Date	2006/10/06

Compal Electronics, Inc.

Title: ENE-KB910L

Size: Custom | Document Number: HGT30/31 LA3061 | Rev: 0.1

Date: 星期四, 二月 23, 2006 | Sheet 33 of 47

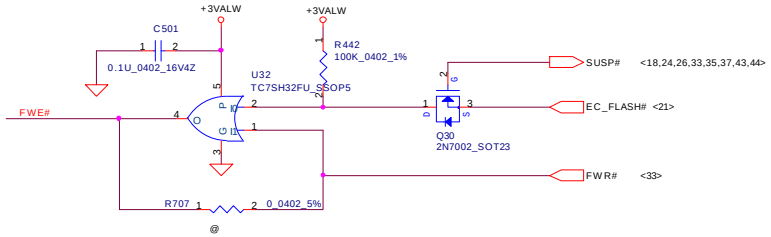

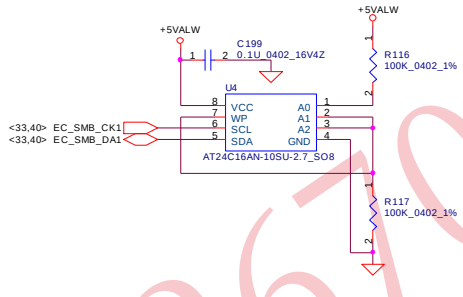

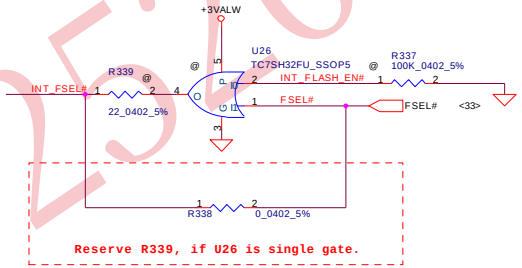

1MB Flash ROM

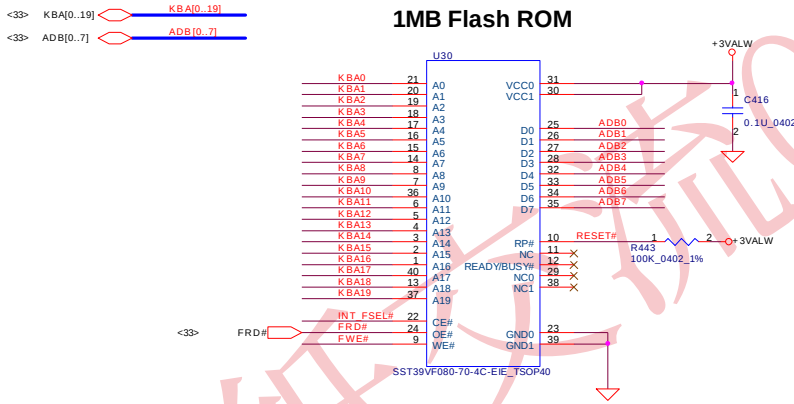

1MB ROM Socket

SB_INT_FLASH_SEL tie to ATI SB GPIO1 and pull down

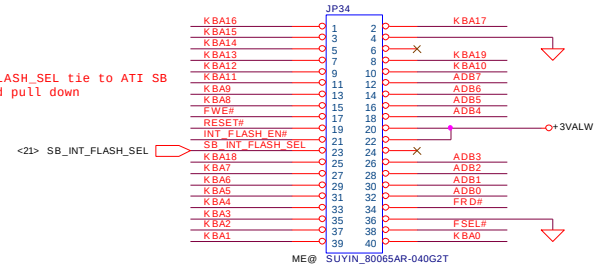

Security Classification	Compal Secret Data		
Issued Date	2005/10/06	Deciphered Date	2006/10/06

Compal Electronics, Inc.

Title: **BIOS & EC I/O Port**

Size: Custom | Document Number: HGT30/31 LA3061 | Rev: 0.1

Date: 星期四, 二月 23, 2006 | Sheet 34 of 47

+5VALW to +5VS Transfer

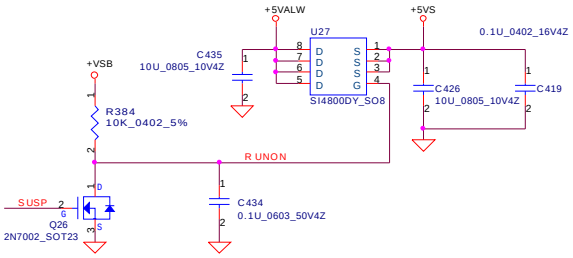

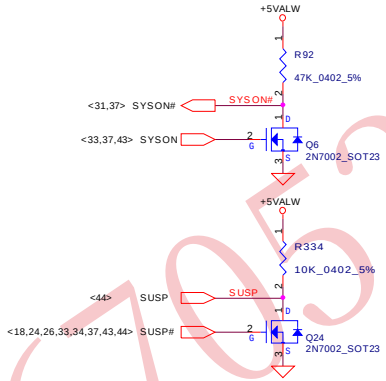

+3VALW to +3VS Transfer

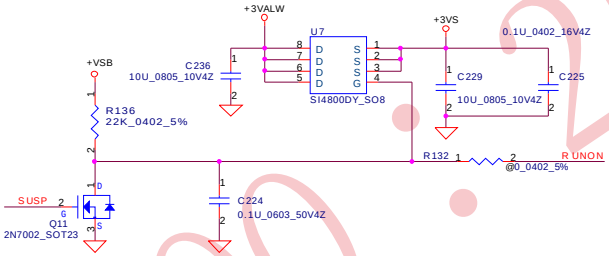

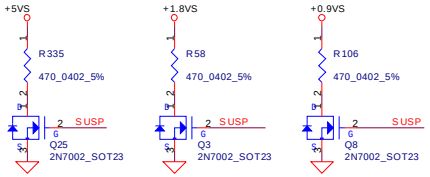

+1.8V to +1.8VS Transfer

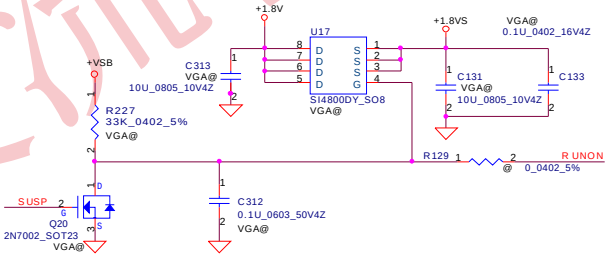

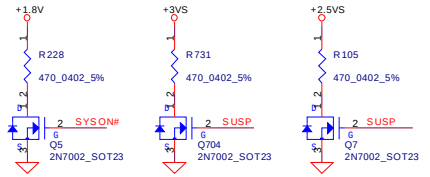

Security Classification	Compal Secret Data		
Issued Date	2005/10/06	Deciphered Date	2006/10/06

Compal Electronics, Inc.

Title: **DC/DC Circuit**

Size: Custom | Document Number: HGT30/31 LA3061 | Rev: 0.1

Date: 星期四, 二月 23, 2006 | Sheet 35 of 47

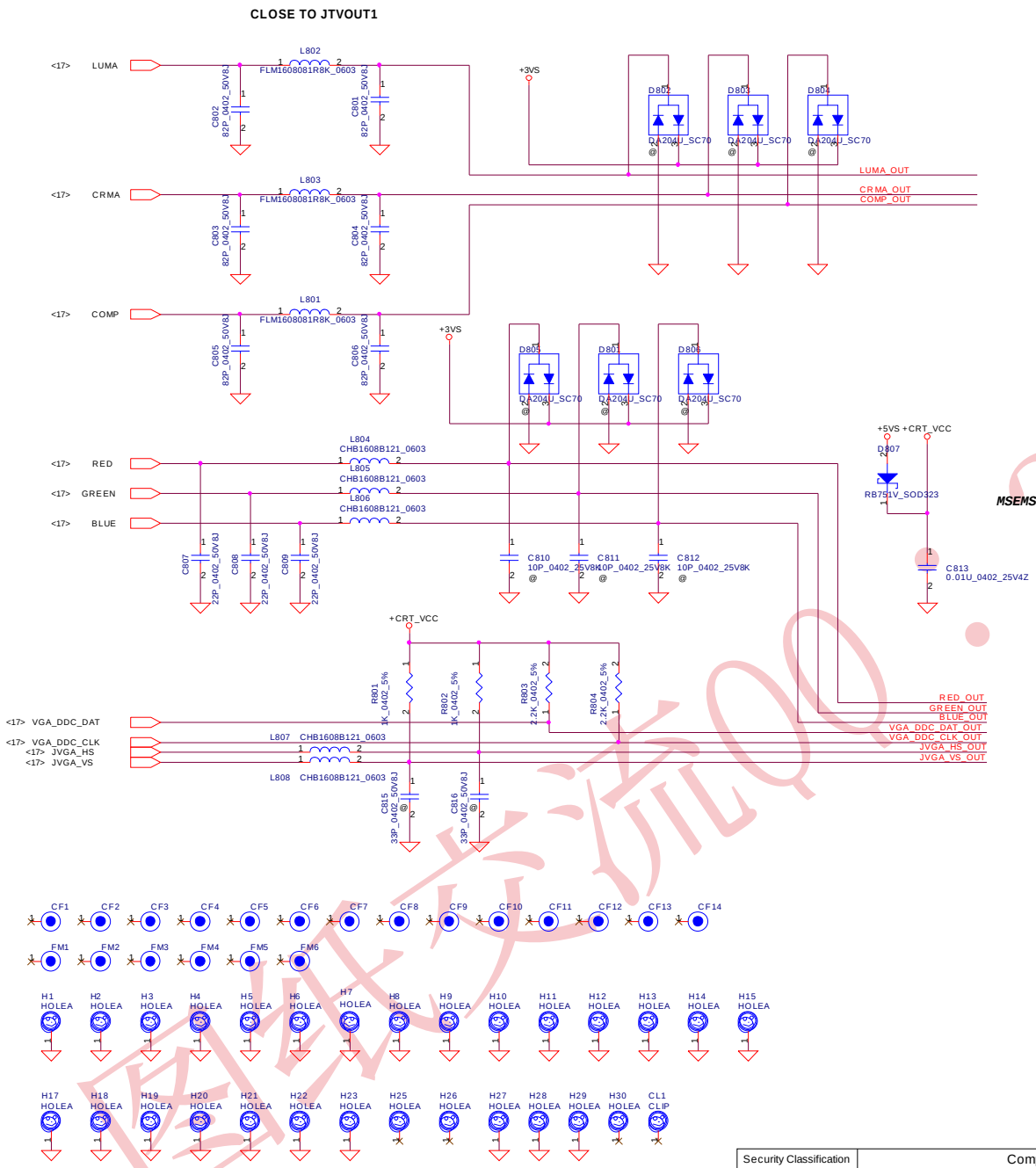

VGA I/O PORT Connector

S-VIDEO

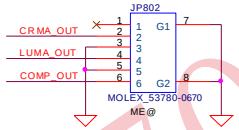

DSUB

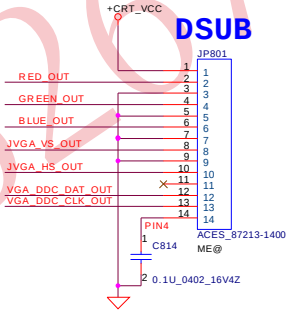

PIN ASSIGMENT

PIN	D-SUB	FUNCTION	PIN	SVIDEO	FUNCTION
1	9	+CRT_VCC	1	1	NC
2	1	RED	2	4	CRMA
3	6	GND	3	2	GND
4	2	GREEN	4	3	LUMA
5	7	GND	5	5	GND
6	3	BLUE	6	6	CVBS
7	8	GND			
8	14	VSYNC			
9	10	GND			
10	13	HSYNC			
11	11	SENSE			
12	12	SM_DAT			
13	15	SM_CLK			
14	4	PIN4			

Security Classification	Compal Secret Data		
Issued Date	2005/03/10	Deciphered Date	2006/03/10

Compal Electronics, Inc.

Title: CRT & TVout Connector

Size: Custom | Document Number: HGT30/31 LA3061 | Rev: 0.1

Date: 星期四, 二月 23, 2006 | Sheet 36 of 47

NEW CARD FOR C38

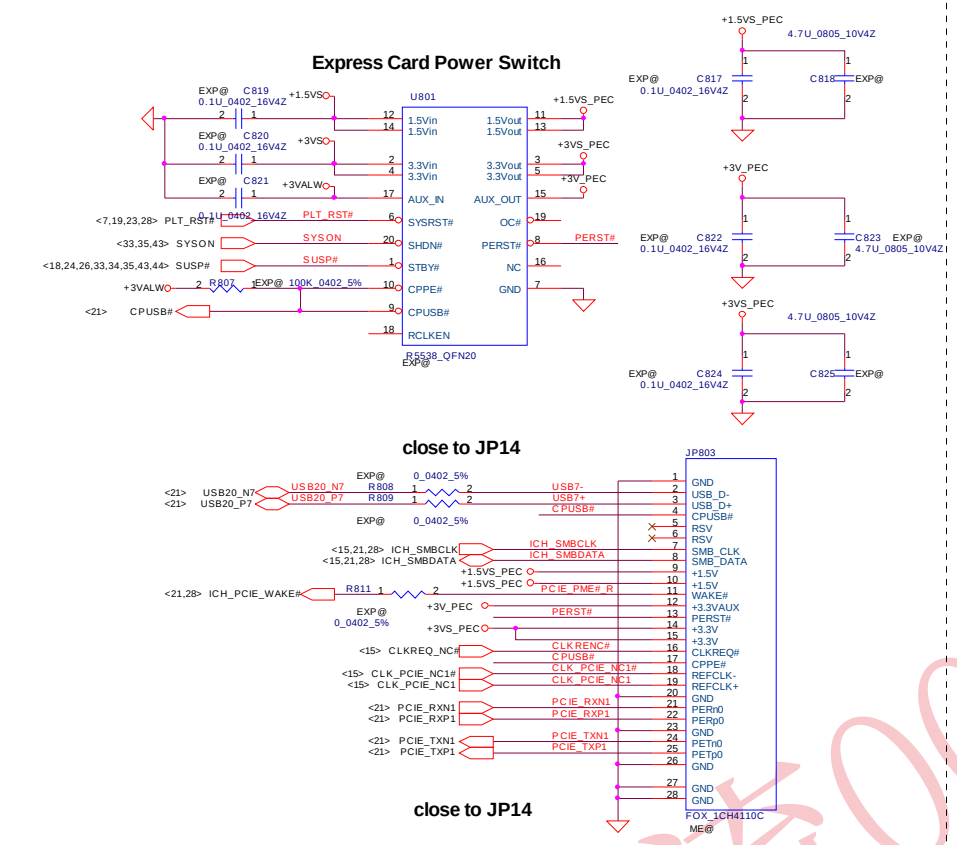

LED Indicator ON M/B

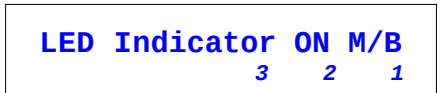

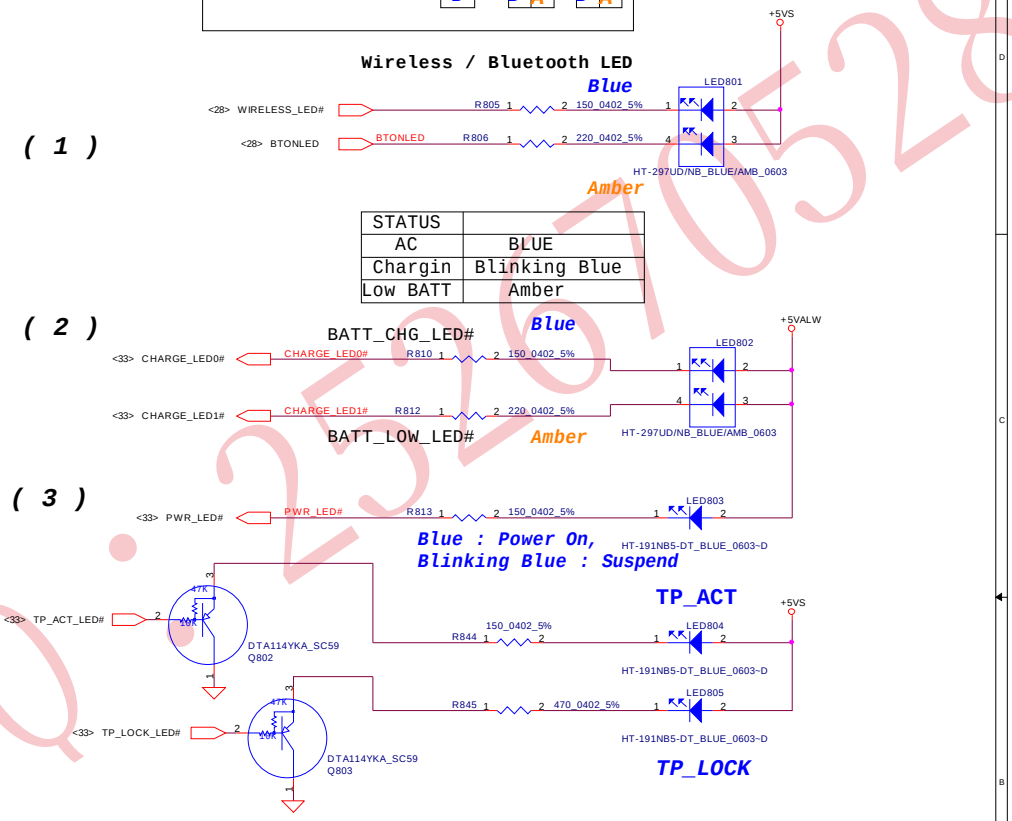

STATUS	
AC	BLUE
Chargin	Blinking Blue
Low BATT	Amber

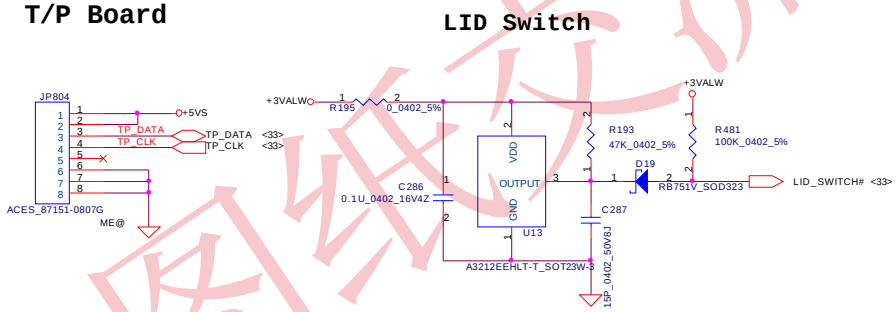

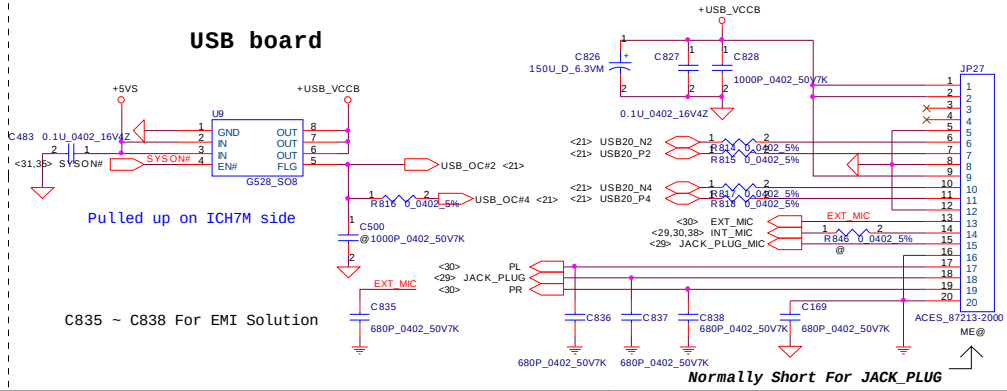

Security Classification	Compal Secret Data		
Issued Date	2005/03/10	Deciphered Date	2006/03/10

Compal Electronics, Inc.

Title: INDICATE LED

Size: Custom | Document Number: HGT30/31 LA3061 | Rev: 0.1

Date: 星期四, 二月 23, 2006 | Sheet 37 of 47

3 IN 1 Card Reader

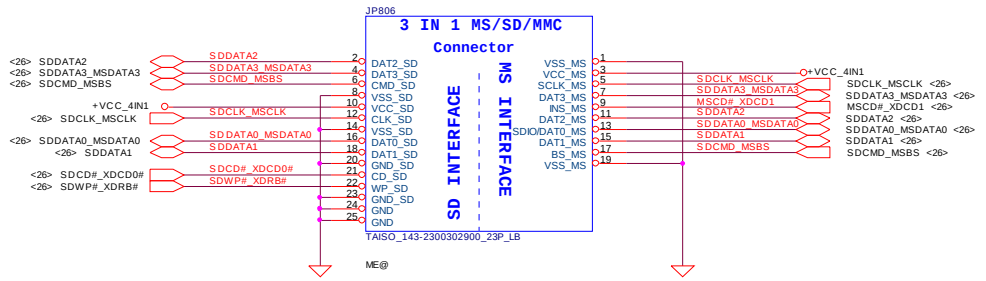

UMA LCD/PANEL Conn.

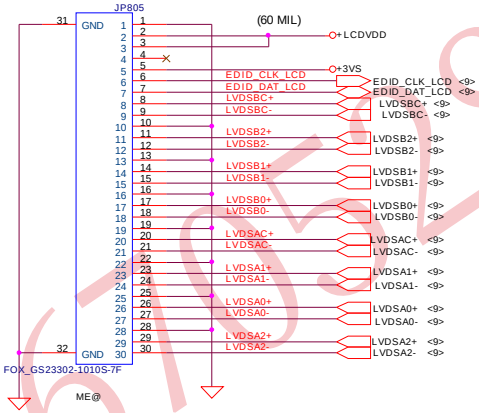

RJ11+RJ45 CONN

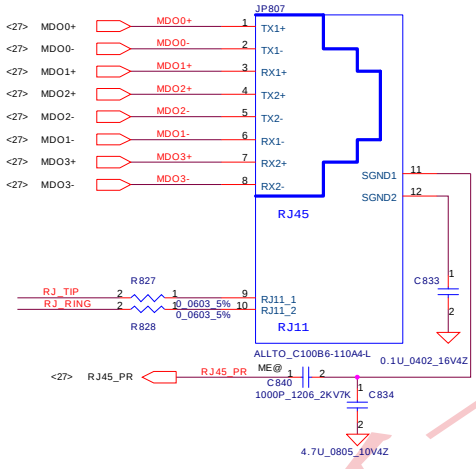

MDC CONN

SWITCH BD

LED Indicator BD

1	2	3	4	5	6
L		M			H

Dial Wheel

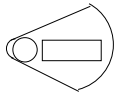

Function

KEY Matrix	K016	K017
KSI0	DW-UP	DW-DOWN
KSI1	DW-ENTER	MUTE

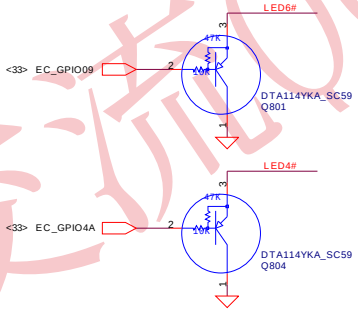

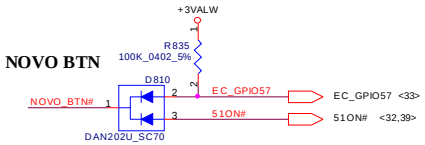

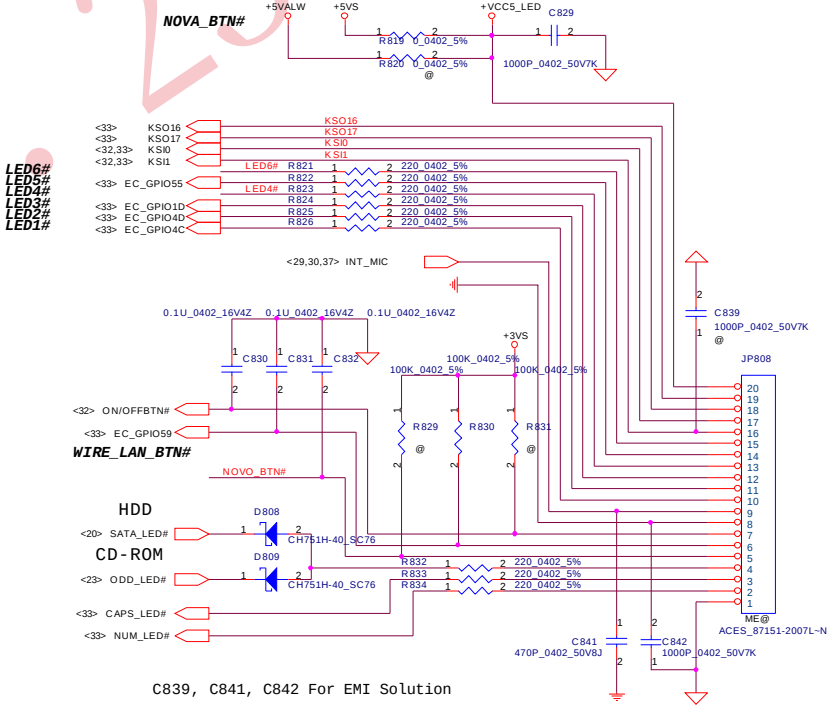

Security Classification	Compal Secret Data		
Issued Date	2005/03/10	Deciphered Date	2006/03/10

Compal Electronics, Inc.

Title: INDICATE LED

Size: Custom | Document Number: HGT30/31 LA3061 | Rev: 0.1

Date: 星期四, 二月 23, 2006 | Sheet 38 of 47

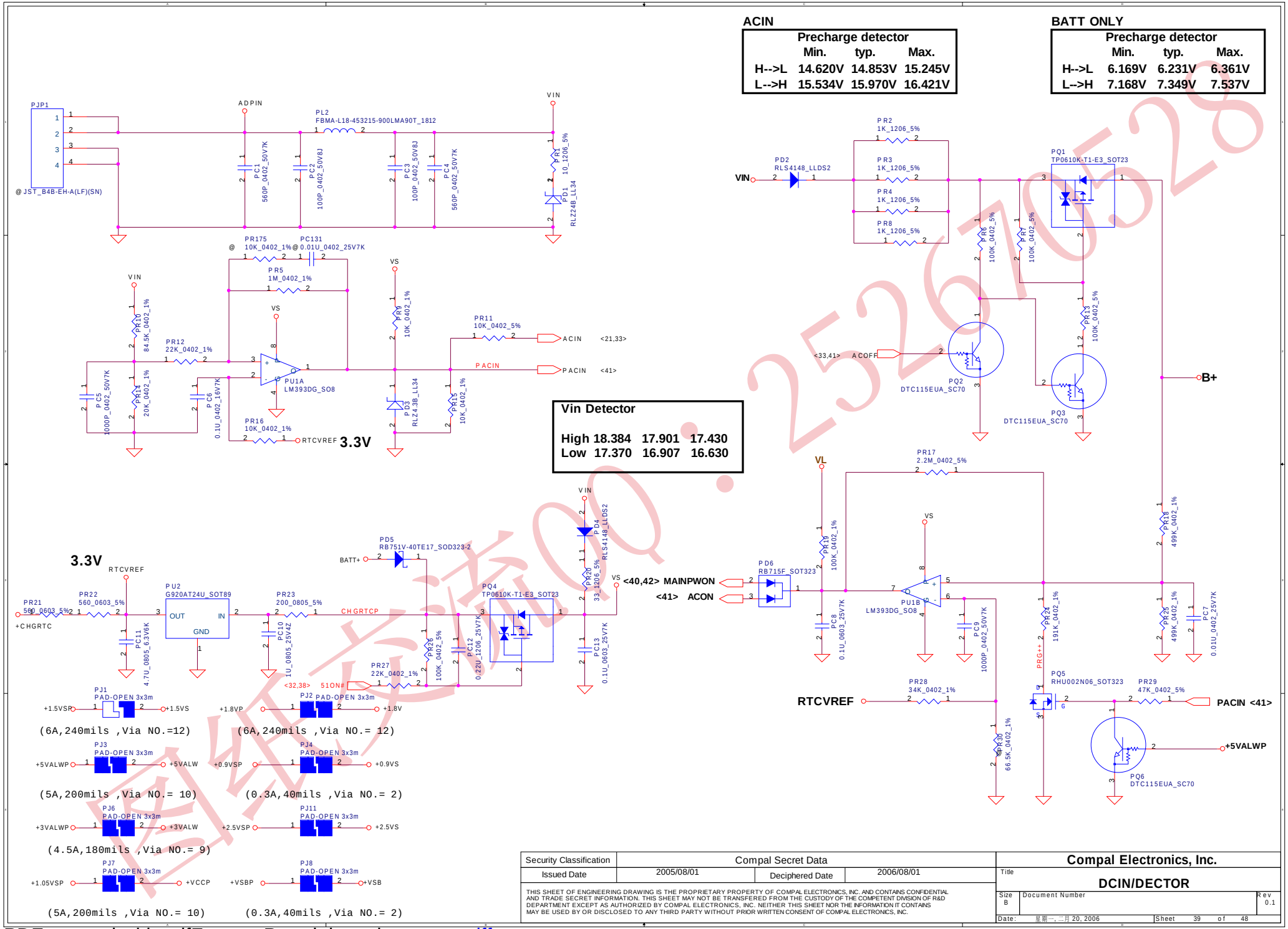

Security Classification	Compal Secret Data		
Issued Date	2005/08/01	Deciphered Date	2006/08/01

Compal Electronics, Inc.

Title: **DCIN/DECTOR**

Size: B | Document Number | Rev: 0.1

Date: 星期一, 二月 20, 2006 | Sheet 39 of 48

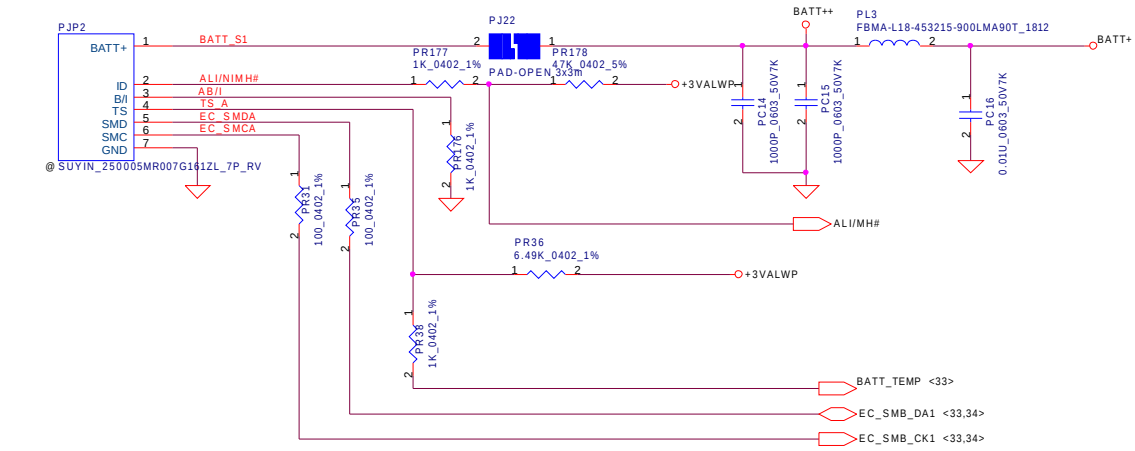

PH1 under CPU botten side :
CPU thermal protection at 85 degree C
Recovery at 70 degree C

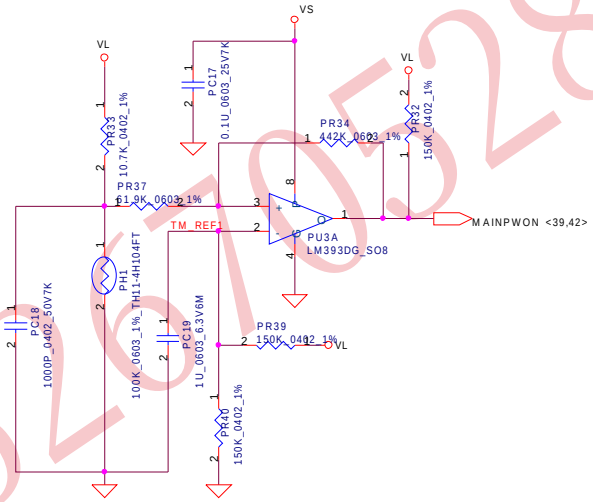

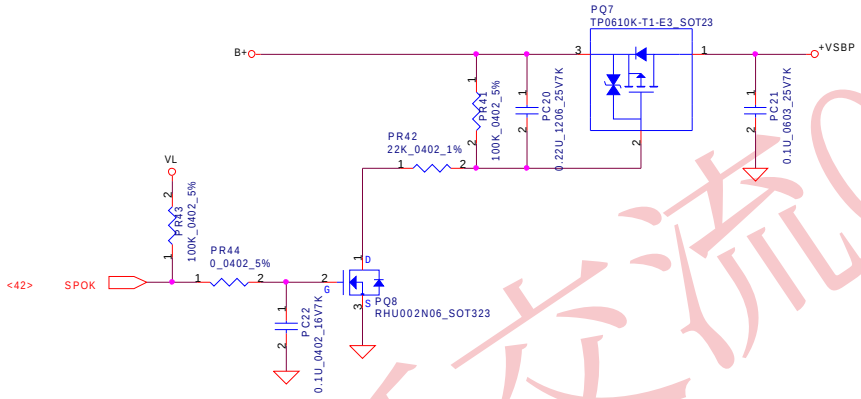

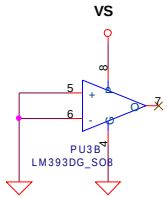

Security Classification	Compal Secret Data		
Issued Date	2005/08/01	Deciphered Date	2006/08/01

Compal Electronics, Inc.

Title: **BATTERY CONN. / OTP**

Size: B | Document Number | Rev: 0.1

Date: 星期一, 三月 20, 2006 | Sheet 40 of 48

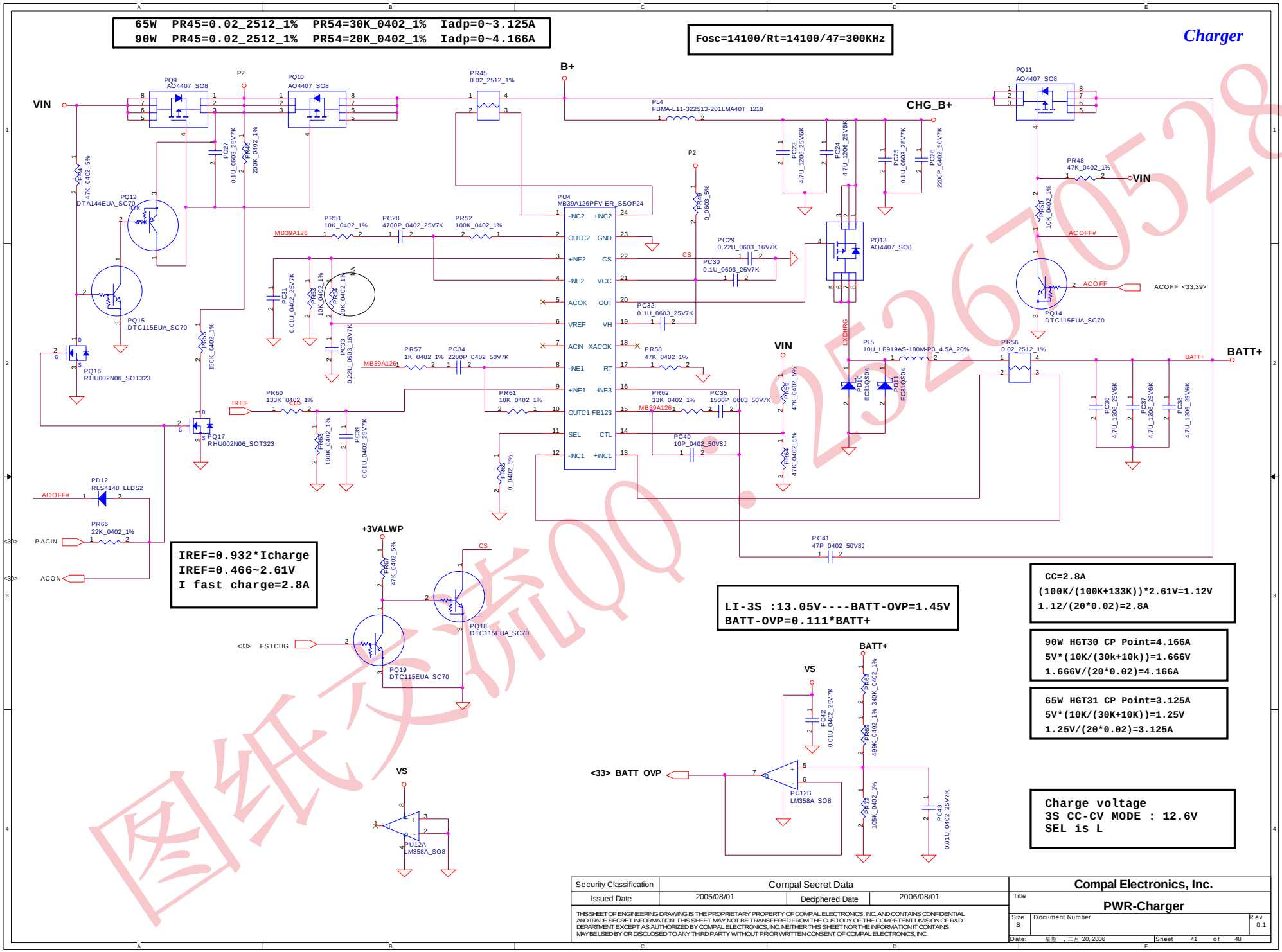

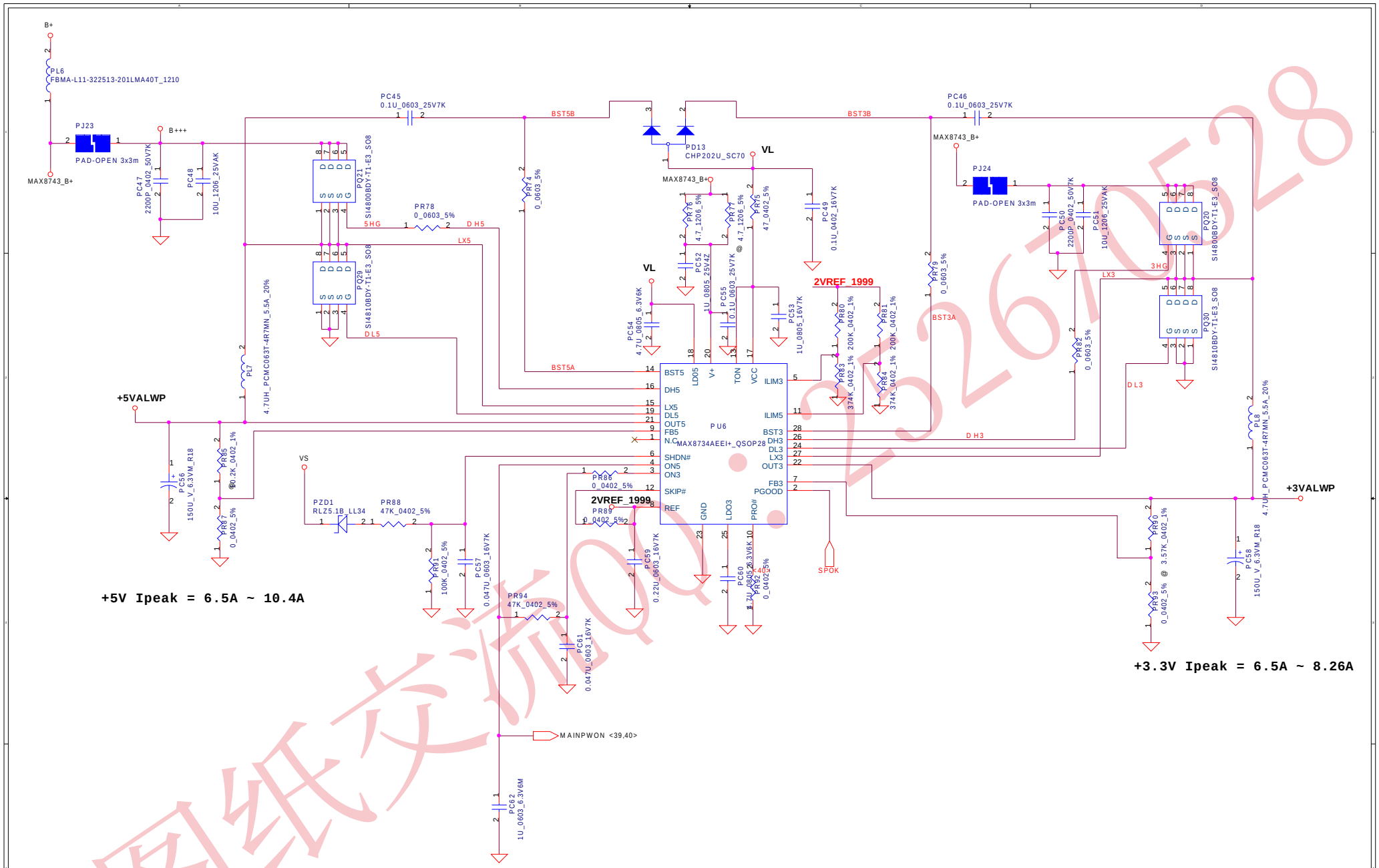

Security Classification	Compal Secret Data		
Issued Date	2005/08/01	Deciphered Date	2006/08/01

Compal Electronics, Inc.

Title: **+5VALWP/+3VALWP**

Size: Custom | Document Number | Rev: 0.1

Date: 星期一, 三月 20, 2006 | Sheet 42 of 48

+1.8VP Ilimit = 7.87A~12.5A

+1.05VSP Ilimit=6.33A~10.03A

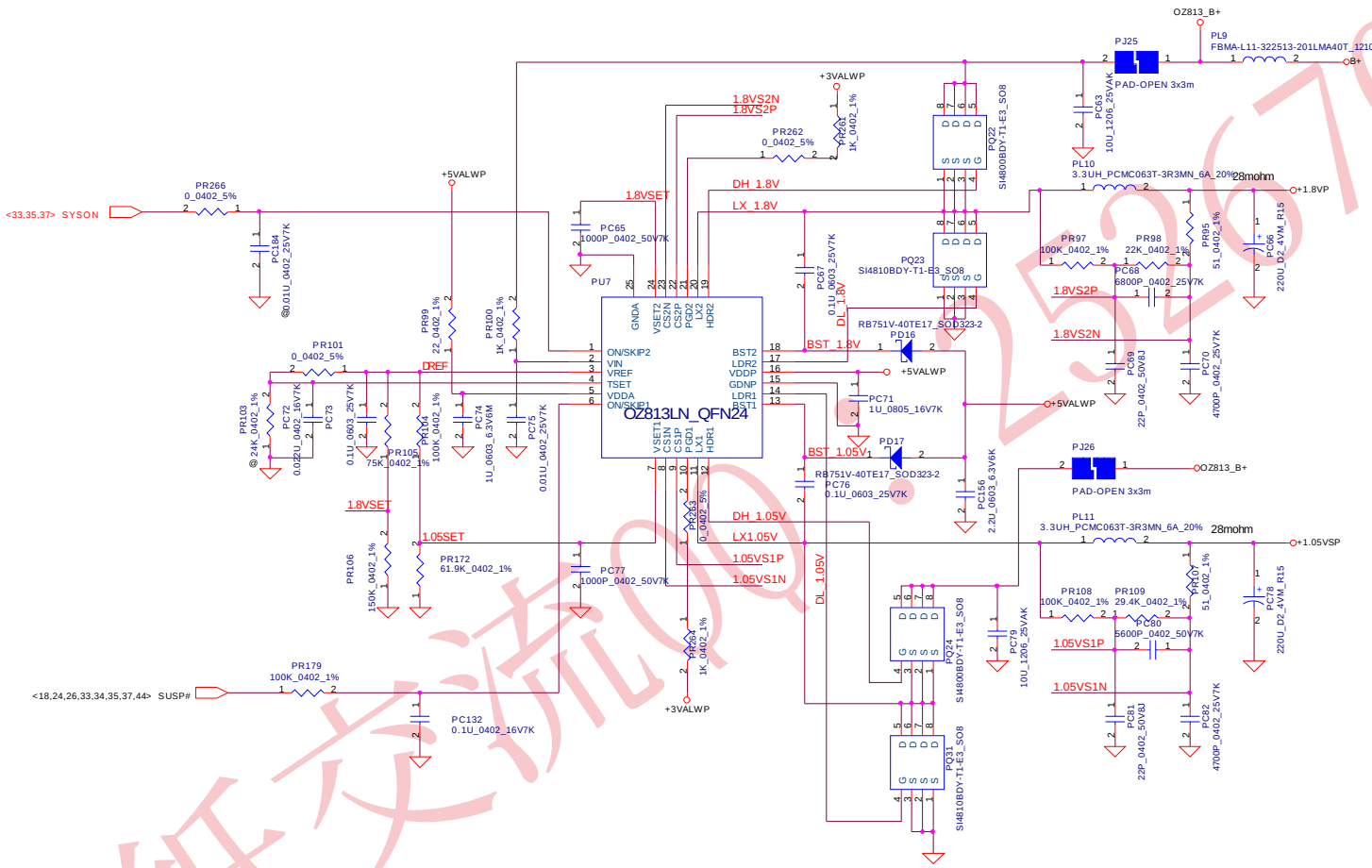

Security Classification	Compal Secret Data		
Issued Date	2005/08/01	Deciphered Date	2006/08/01

Compal Electronics, Inc.

Title: **1.05VP/1.8VP**

Size: Custom | Document Number | Rev: 0.1

Date: 星期一, 二月 20, 2006 | Sheet 43 of 48

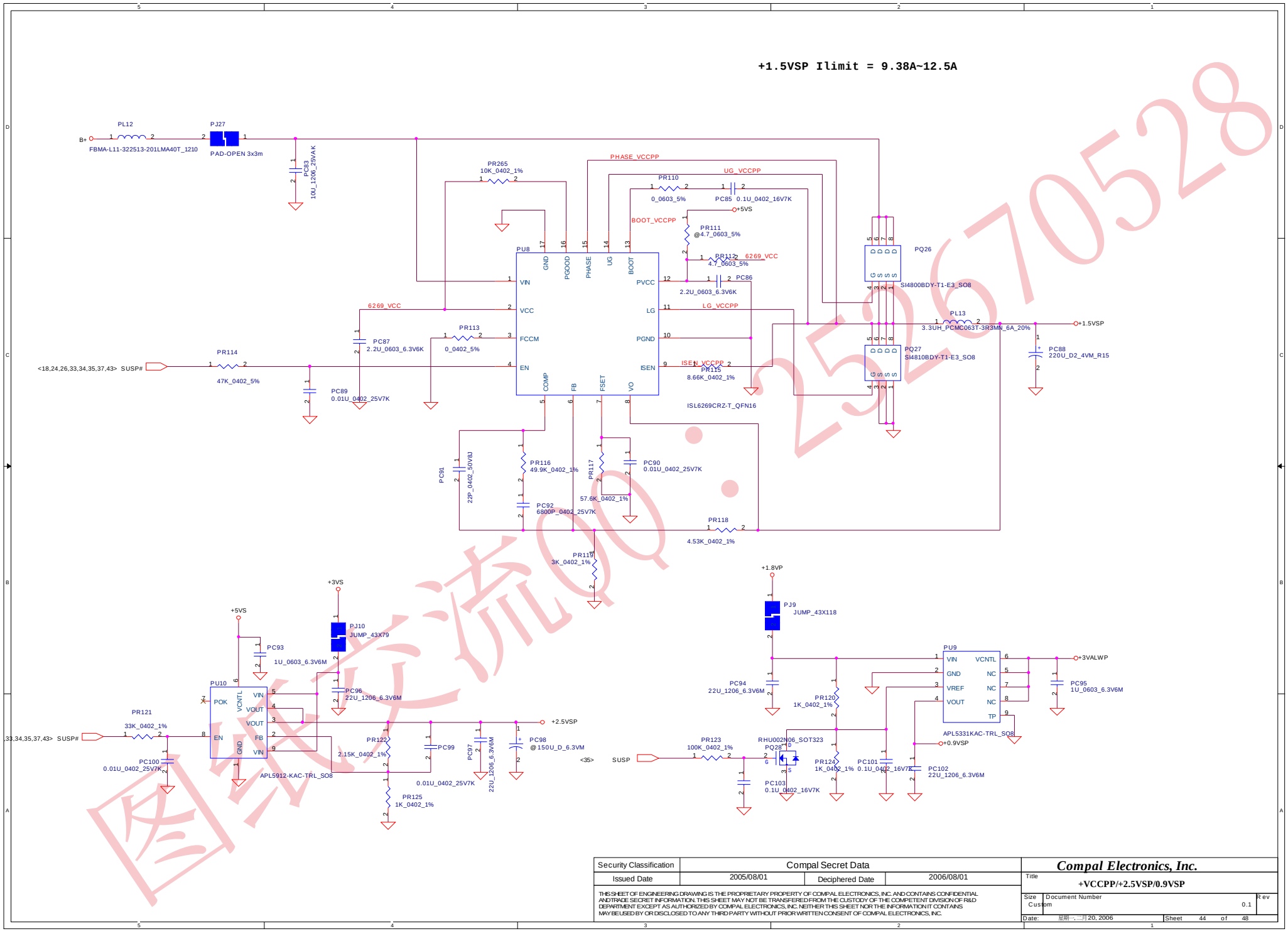

Security Classification	Compal Secret Data		
Issued Date	2005/08/01	Deciphered Date	2006/08/01

Compal Electronics, Inc.

Title: +VCCPP/+2.5VSP/0.9VSP

Size: Custom | Document Number | Rev: 0.1

Date: 星期一, 二月 20, 2006 | Sheet 44 of 48

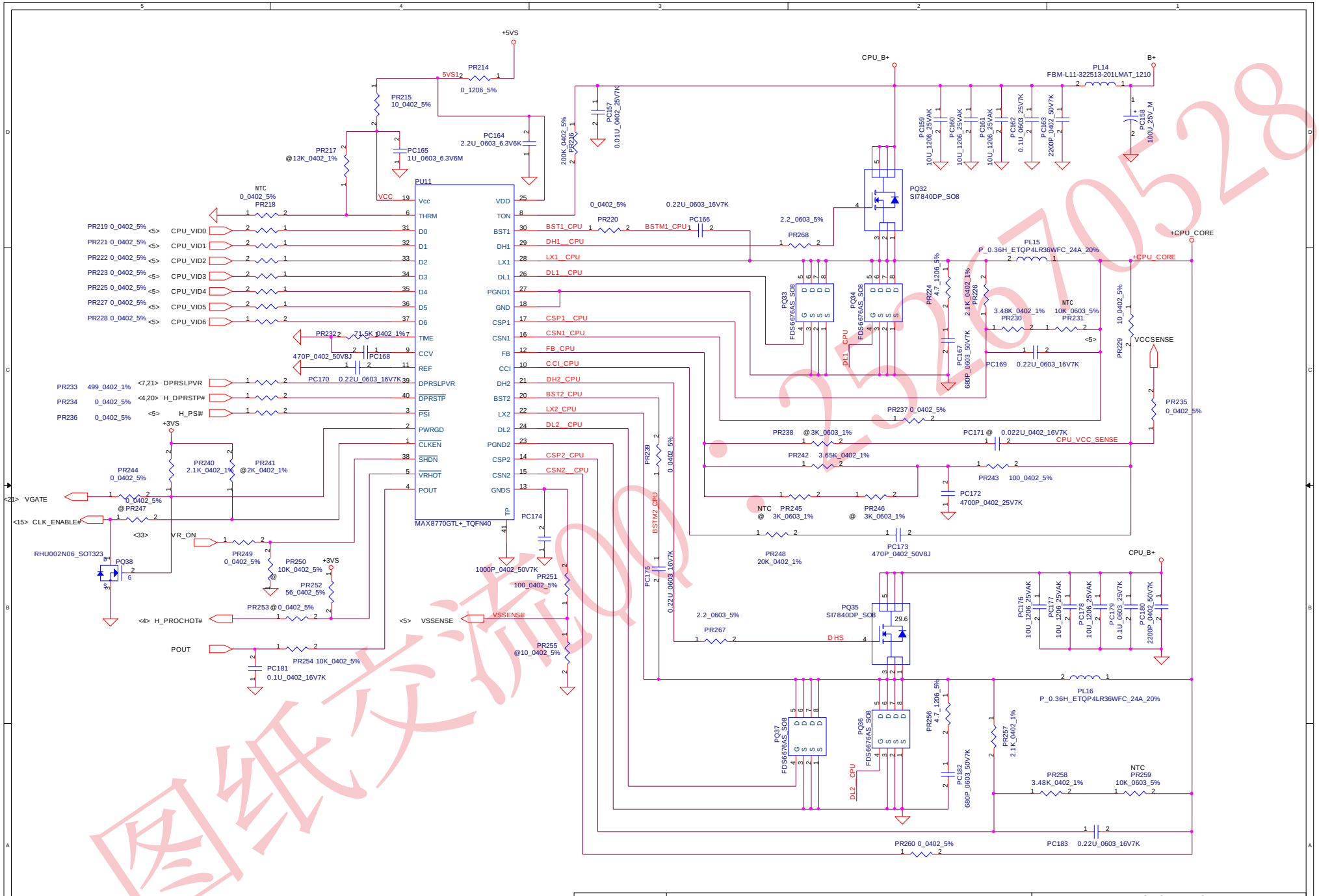

Security Classification	Compal Secret Data		
Issued Date	2005/06/20	Deciphered Date	2006/06/20

Compal Electronics, Inc.

Title: **+CPU_CORE**

Size: Custom | Document Number | Rev: 0.1

Date: 星期一, 二 ?20, 2006 | Sheet 45 of 48

Version change list (P.I.R. List)

Item	Fixed Issue	Reason for change	Rev.	PG#	Modify List	VER	Phase
1		MODIFY 3V/5V current limit to 6.5A~8.1A/6.5A to 10.2A		42	MODIFY PR83/PR84 FROM 499K TO 374K		DVT
2		ADD or decrease CPU CORE ring with EMI solution : snubber		45	Reserve PR224//PR256: 4.7 1206 ,add PC167/PC182:680P		DVT
3		Reserve PR267,PR268 seperate in CPU CORE high side gate for EMI require		45	Reserve PR267,PR268:0 0603		DVT
4		change PJP1 from 5 pin to 4 pin		39	change PJP1 from 5 pin to 4 pin		DVT
5		modify sequecce		43	change PR179 to 100k, PC132 =0.1U		DVT
6		modify Vgate		45	add PQ38:RHU002N06,PR240:2K,delete PR247		
7							
8							
9							
10							
11							
8							
9							

Compal Electronics, Inc.	
Title	PIR (PWR)
Size	Document Number / Rev 0.2
Date: 星期一, 二月 20, 2006	Sheet 46 of 48

Version change list (P.I.R. List)

Item	Fixed Issue	Rev.	PG#	Modify List	B.Ver#	Phase
1	Add EC_Port80 Signals to DDR2 DIMM1 & DIMM2	0.2	P.13 P.14	1.Connect U6.91 (EC_P80_CLK) through a 0 Ohm R to JP3.83 & JP4.83 2.Connect U6.92 (EC_P80_DATA) through a 0 Ohm R to JP3.69 & JP4.69	0.2	DVT
2	Impedance not match for both CRT & TV Out	0.2	P.17	R3, R4, R5, R6, R7, R8 Change from NC to 150 Ohm	0.2	DVT
3	LCD Panel will flash white frame when power on	0.2	P.16	no stuff D10 (CH751H), stuff R204 (100K)	0.2	DVT
4	ICH7's GPIO configuration modification	0.2	P.21	GPIO10 connect to ACIN GPIO7 connect to G7X_THER_ALERT# GPIO39 connect to KILL_MDC#	0.2	DVT
5	<New Add> MDC supports S4/S5 resuming	0.2	P.28	MDC power connection change to +3VALW from +3VS	0.2	DVT
6	Audio Circuit modification for : 1. Line-Out connection change from Pin.35/Pin.36 to Pin.43/Pin.45 2. Audio-OUT Auto-Switch by HP Pluging In 3. MicPhone Noise Reduction 4. Cleared off BO Sound from both entry of Windows XP & Power Off	0.2	P.29-31	Line-Out connection change from Pin.35/Pin.36 to Pin.43/Pin.45 Connect Pin.32 (LFE_OUT) through 2 1uF Cap to Pin.43/Pin.45 +Audio_VREF_LF connection change to 1/2 +AVDD_AC97 Int.MIC connection changes to Pin31/Pin32 through 1uF for each New Add a JACK_PLUG_MIC signal from MIC JACK EAPD signal connect to EC'sGPIO4B APA2068's 13PIN(SE/BTL#) connect to GND	0.2	DVT
7	EC GPIO configuration modification	0.2	P.33	New add Port80 information OUT from Pin34(CLK), pin35(DATA) LED4 connection changes from GPIO17(35 PIN) to GPIO4A(91 PIN) New Add DAC's EAPD connect to EC's GPIO4B (92PIN). SKU_ID (GPIO3B) Changes to BRD_ID New Add WL_OFF# (GPIO1F, 46PIN) New Add BT_OFF# (GPIO50, 84PIN) New Add TP_ACT_LED# (GPIO3F, 80PIN) New Add TP_LOCK_LED# (GPIO12, 30PN)	0.2	DVT
8	Lid Switch changes from USB BD to M/B	0.2	P.37	Circuit of Lid SW changes from USB BD to M/B (DEL Lid SW on USB BD)	0.2	DVT
9	Blue LED too dark when active due to VF too High on blue LED	0.2	P.37-38	Changes LED power from +3VS(+3VALW) to +5VS(+5VALWS)	0.2	DVT
10	New Add LED Buffer for LED4, TP_LOCK_LED#, TP_ACT_LED#	0.2	P.37 P.38	TP_ACT_LED# connect to Q802.2, and Q802.1 to GND, then connect to LED804 through a 220 Ohm R TP_LOCK_LED# connect to Q803.2, and Q802.1 to GND, then connect to LED805 through a 220 Ohm R EC_GPIO4A connect to Q804.2, and Q804.1 to GND, then connect to R283 (220 Ohm)	0.2	DVT
11	leakage of electricit when System is running S3 mode	0.2		NC For R458, R402, R411, R128, R831, R829	0.2	DVT

Item	Fixed Issue	Rev.	PG#	Modify List	B.Ver#	Phase
12	GIGA LAN function failed for both Loopback or PXE on RTL8110SCL solution	0.3	P.27	1. Add a R734 (0 Ohm) resistor between +2.5V_LAN & VTCT for MAC 2. Removed all of the bypass Cap.(C398, C396, C418, C408) for MAC's TCT pins 3. Removed all of pulled down resistors (49.9 Ohm) & Cap.(0.01u)	0.3	PVT
13	Subwoofer still make POP Sound	0.3	P.31	1. Add 0 Ohm resistors, R732 (0 Ohm) connection between AMP_OFF# & U12.2 (SD#) for reserved 2. a 0 Ohm connection between EAPD & U12.2(SD#)	0.3	PVT
14	Mic Switch between Int. & Ext. be Failed	0.3	P.29	1. R717.1 Disconnect from U11.17 2. R717.1 connect to U11.16	0.3	PVT
15	Wrong parts	0.3	P.35	Change package of C434, C224 & C312 from 0402 to 0603	0.3	PVT
16	Add a discharging path of +3.3VS	0.3	P.35	1. Connect +3.3VS to R731.1 2. Connect R731.2 to Q704.1 3. Connect Q704.2 to NET : SUSP signal 4. Connect Q704.3 to GND	0.3	PVT