UMA & Optimus Schematics Document

IVY Bridge(rPGA989)

Intel PCH(Panther Point)

DY :NotInstalled
UMA:UMA platform installed
OPS:Optimus
HR:Huron River
CR:Chief River
V: V-Series installed

www.chinafix.com

<Core Design>

緯創資通
Wistron Corporation
21F,88,Sec.1,Hsin Tai Wu Rd.,Hsichih,
Taipei Hsien 221, Taiwan, R.O.C

Title	**Cover Page**	
Size A4	Document Number **LA480**	Rev SD
Date: Friday, January 06, 2012	Sheet 1 of 103	

Block Diagram (UMA/Optimus co-lay)

	LA480	LA580
Project Code	91.4TD01.001	91.4TE01.001
PCB P/N	11264	11273
Revision	SC	SC

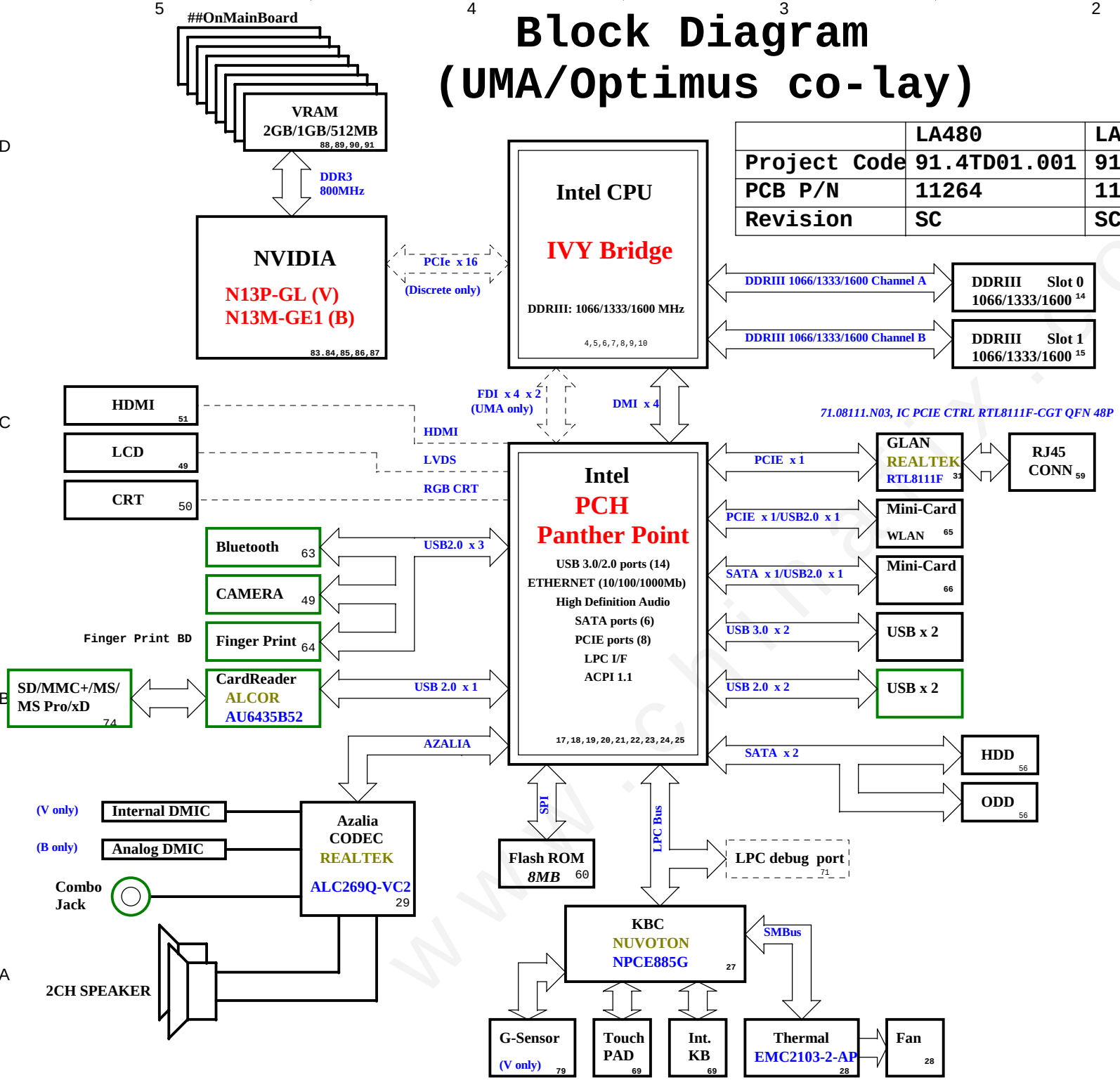

CPU DC/DC TPS51640 42-43	
INPUTS	OUTPUTS
DCBATOUT	VCC_CORE

SYSTEM DC/DC TPS51219 45	
INPUTS	OUTPUTS
DCBATOUT	1D05V_VTT

SYSTEM DC/DC TPS51225 41	
INPUTS	OUTPUTS
DCBATOUT	3D3V_AUX_S5 5V_S5 3D3V_S5

SYSTEM DC/DC RT8207M 46	
INPUTS	OUTPUTS
DCBATOUT	0D75V_S0 1D5V_S3 DDR_VREF_S3

SYSTEM DC/DC TPS51640 44	
INPUTS	OUTPUTS
DCBATOUT	VCC_GFXCORE

VGA TPS51728 92	
INPUTS	OUTPUTS
DCBATOUT	VGA_CORE

TI CHARGER BQ24737 40	
INPUTS	OUTPUTS
+DC_IN_S5 +PBATT	DCBATOUT

SYSTEM DC/DC RT8068A 47	
INPUTS	OUTPUTS
3D3V_S5	1D8V_S0

LDO RT8207 46	
INPUTS	OUTPUTS
5V_S5	0D75V_S0

PCB LAYER	
L1:Top	L5:VCC
L2:GND	L6:Signal
L3:Signal	L7:GND
L4:Signal	L8:Signal

www.chinafix.com

<Core Design>

緯創資通 Wistron Corporation
21F,88,Sec.1,Hsin Tai Wu Rd.,Hsichih,
Taipei Hsien 221, Taiwan, R.O.C

Title: Block Diagram

Size: A3 | Document Number: LA480 | Rev: SD

Date: Friday, January 06, 2012 | Sheet 2 of 103

PCH Strapping Chief River Schematic Checklist Rev0.72

Name	Schematics Notes
SPKR	**Reboot option at power-up** **Default Mode:** Internal weak Pull-down. **No Reboot Mode with TCO Disabled:** Connect to Vcc3_3 with 8.2-kΩ - 10-kΩ weak pull-up resistor.
INIT3_3V#	Weak internal pull-up. Leave as "No Connect".
GNT3#/GPIO55 GNT2#/GPIO53 GNT1#/GPIO51	GNT[3:0]# functionality is not available on Mobile. Mobile: Used as GPIO only Pull-up resistors are not required on these signals. If pull-ups are used, they should be tied to the Vcc3_3power rail.
SPI_MOSI	**Enable Danbury:** Connect to Vcc3_3 with 8.2-k? weak pull-up resistor. **Disable Danbury:** Left floating, no pull-down required.
NV_ALE	**Enable Danbury:** Connect to +NVRAM_VCCQ with 8.2-kohm weak pull-up resistor [CRB has it pulled up with 1-kohm no-stuff resistor] **Disable Danbury:** Leave floating (internal pull-down)
NC_CLE	DMI termination voltage. Weak internal pull-up. Do not pull low.
HAD_DOCK_EN# /GPIO[33]	Low (0) - Flash Descriptor Security will be overridden. Also, when this signals is sampled on the rising edge of PWROK then it will also disable Intel ME and its features. High (1) - Security measure defined in the Flash Descriptor will be enabled. Platform design should provide appropriate pull-up or pull-down depending on the desired settings. If a jumper option is used to tie this signal to GND as required by the functional strap, the signal should be pulled low through a weak pull-down in order to avoid asserting HDA_DOCK_EN# inadvertently. Note: CRB recommends 1-kohm pull-down for FD Override. There is an internal pull-up of 20 kohm for DA_DOCK_EN# which is only enabled at boot/reset for strapping functions.
HDA_SDO	Weak internal pull-down. Do not pull high. Sampled at rising edge of RSMRST#.
HDA_SYNC	Weak internal pull-down. Do not pull high. Sampled at rising edge of RSMRST#.
GPIO15	Low(0) - Intel ME Crypto Transport Layer Security (TLS) cipher suite with no confidentiality. High(1) - Intel ME Crypto Transport Layer Security (TLS) cipher suite with confidentiality. Note : This is an un-muxed signal. This signal has a weak internal pull-down of 20 kohm which is enabled when PWROK is low. Sampled at rising edge of RSMRST#. CRB has a 1-kohm pull-up on this signal to +3.3VA rail.
GPIO8	GPIO8 on PCH is the Integrated Clock Enable strap and is required to be pulled-down using a 1k +/- 5% resistor. When this signal is sampled high at the rising edge of RSMRST#, Integrated Clocking is enabled, When sampled low, Buffer Through Mode is enabled.
GPIO27	**Default = Do not connect (floating)** High(1) = Enables the internal VccVRM to have a clean supply for analog rails. No need to use on-board filter circuit. Low (0) = Disables the VccVRM. Need to use on-board filter circuits for analog rails.

Processor Strapping Chief River Schematic Checklist Rev0.72

Pin Name	Strap Description	Configuration (Default value for each bit is 1 unless specified otherwise)	Default Value
CFG[2]	**PCI-Express Static Lane Reversal**	**1:** Normal Operation. **0:** Lane Numbers Reversed 15 -> 0, 14 -> 1, ...	1
CFG[4]		**1:** Disabled - No Physical Display Port attached to Embedded DisplayPort. **0:** Enabled - An external Display Port device is connectd to the EMBEDDED display Port	0
CFG[6:5]	**PCI-Express Port Bifurcation Straps**	11 : x16 - Device 1 functions 1 and 2 disabled 10 : x8, x8 - Device 1 function 1 enabled ; function 2 disabled 01 : Reserved - (Device 1 function 1 disabled ; function 2 enabled) 00 : x8, x4, x4 - Device 1 functions 1 and 2 enabled	11
CFG[7]	**PEG DEFER TRAINING**	**1:** PEG Train immediately following xxRESETB de assertion **0:** PEG Wait for BIOS for training	1

POWER PLANE	VOLTAGE	Voltage Rails ACTIVE IN	DESCRIPTION
5V_S0 3D3V_S0 1D8V_S0 1D5V_S0 1D05V_VTT 1D0V_S0 VCCSA 0D75V_S0 VCC_CORE VCC_GFXCORE 1D8V_VGA_S0 3D3V_VGA_S0 1V_VGA_S0	5V 3.3V 1.8V 1.5V 1.05V 1.0V 0.9 - 0.675V 0.75V 0.35V to 1.5V 0.4 to 1.25V 1.8V 3.3V 1V	S0	CPU Core Rail Graphics Core Rail
5V_USBX_S3 1D5V_S3 DDR_VREF_S3	5V 1.5V 0.75V	S3	
BT+ DCBATOUT 5V_S5 5V_AUX_S5 3D3V_S5 3D3V_AUX_S5	6V-14.1V 6V-14.1V 5V 5V 3.3V 3.3V	All S states	AC Brick Mode only
1D05V_LAN	1.05V	S0/M0, SX/M3	ON whenever iAMT is active
3D3V_M 1D05V_M	3.3V 1.05V	S0/M0, SX/M3, WOL_EN	ON for iAMTLegacy WOL
3D3V_AUX_KBC	3.3V	DSW, Sx	ON for supporting Deep Sleep states
3D3V_AUX_S5	3.3V	G3, Sx	Powered by Li Coin Cell in G3 and 3D3V_S5 in Sx

PCIe Routing

LANE1	X
LANE2	Mini Card2(WWAN)
LANE3	Card Reader
LANE4	Mini Card1(WLAN)
LANE5	X
LANE6	Intel GBE LAN / LAN
LANE7	X
LANE8	Express Card

USB Table port9 is debug port

Pair	Device
0	USB3.0 ext port 1
1	USB3.0 ext port 2
2	USB3.0 ext port 3
3	USB3.0 ext port 4
4	BLUETOOTH (USB1.1)
5	Fingerprint (USB1.1)
6	X
7	X
8	Mini Card2 (WWAN)
9	USB ext. port 4 / E-SATA /USB CHARGER
10	CARD READER
11	Mini Card1 (WLAN)
12	CCD
13	New Card

SMBus ADDRESSES

I²C / SMBus Addresses Device	Ref Des	Chief River CRV Address Hex Bus
EC SMBus 1 Battery CHARGER		BAT_SCL/BAT_SDA BAT_SCL/BAT_SDA BAT_SCL/BAT_SDA
EC SMBus 2 PCH eDP		SML1_CLK/SML1_DATA SML1_CLK/SML1_DATA SML1_CLK/SML1_DATA
PCH SMBus SO-DIMMA (SPD) SO-DIMMB (SPD) Digital Pot G-Sensor MINI		PCH_SMBDATA/PCH_SMBCLK PCH_SMBDATA/PCH_SMBCLK PCH_SMBDATA/PCH_SMBCLK PCH_SMBDATA/PCH_SMBCLK PCH_SMBDATA/PCH_SMBCLK PCH_SMBDATA/PCH_SMBCLK

SATA Table

SATA	
Pair	Device
0	HDD1
1	mSATA
2	N/A
3	N/A
4	ODD
5	ESATA

www.chinafix.com

<Core Design>
緯創資通 Wistron Corporation
21F, 88, Sec.1, Hsin Tai Wu Rd., Hsichih,
Taipei Hsien 221, Taiwan, R.O.C.

Title: Table of Content

Size	Document Number	Rev
A3	LA480	SD

Date: Friday, January 06, 2012 Sheet 3 of 103

SSID = CPU

01.00IVY.000 IVY BRIDGE ORCAD SYMBOL.

Note:
Intel DMI supports both Lane Reversal and polarity inversion but only at PCH side. This is enabled via a soft strap.

Signal Routing Guideline:
PEG_ICOMPO keep W/S=12/15 mils and routing length less than 500 mils.
PEG_ICOMPI & PEG_RCOMPO keep W/S=4/15 mils and routing length less than 500 mils.

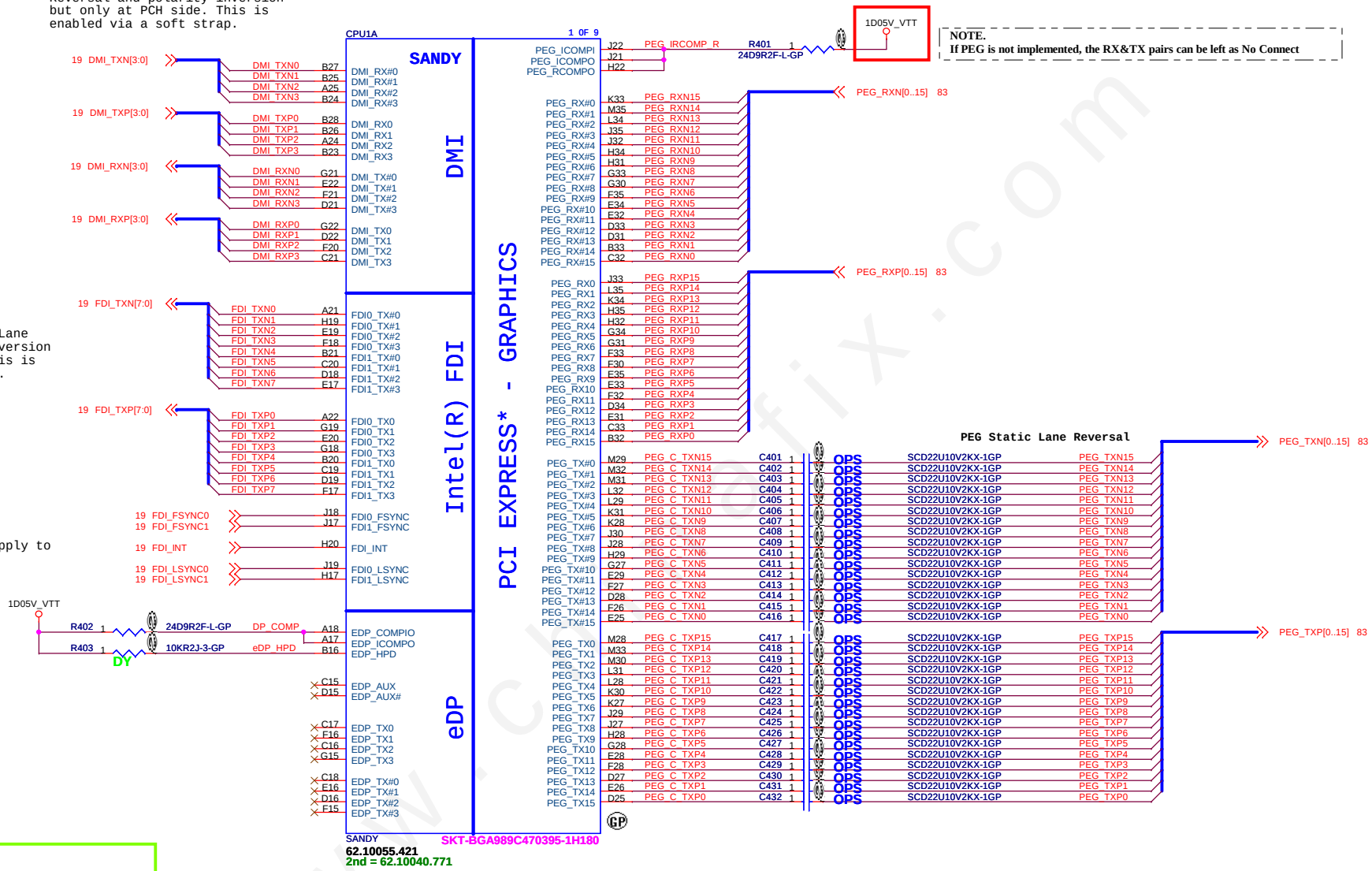

NOTE.
If PEG is not implemented, the RX&TX pairs can be left as No Connect

Note:
Intel FDI supports both Lane Reversal and polarity inversion but only at PCH side. This is enabled via a soft strap.

Note:
Lane reversal does not apply to FDI sideband signals.

NOTE:
Select a Fast FET similar to 2N7002E whose rise/fall time is less than 6 ns. If HPD on eDP interface is disabled, connect it to CPU VCCIO via a 10-kΩ pull-Up resistor on the motherboard.

Signal Routing Guideline:
EDP_ICOMPO keep W/S=12/15 mils and routing length less than 500 mils.
EDP_COMPIO keep W/S=4/15 mils and routing length less than 500 mils.

NOTE.
Processor strap CFG[4] should be pulled low to enable Embedded DisplayPort.

<Core Design>

Wistron Corporation
21F,88,Sec.1,Hsin Tai Wu Rd.,Hsichih, Taipei Hsien 221, Taiwan, R.O.C

Title: CPU (PCIE/DMI/FDI)
Size: A3
Document Number: LA480
Rev: SD
Date: Friday, January 06, 2012
Sheet 4 of 103

SSID = CPU

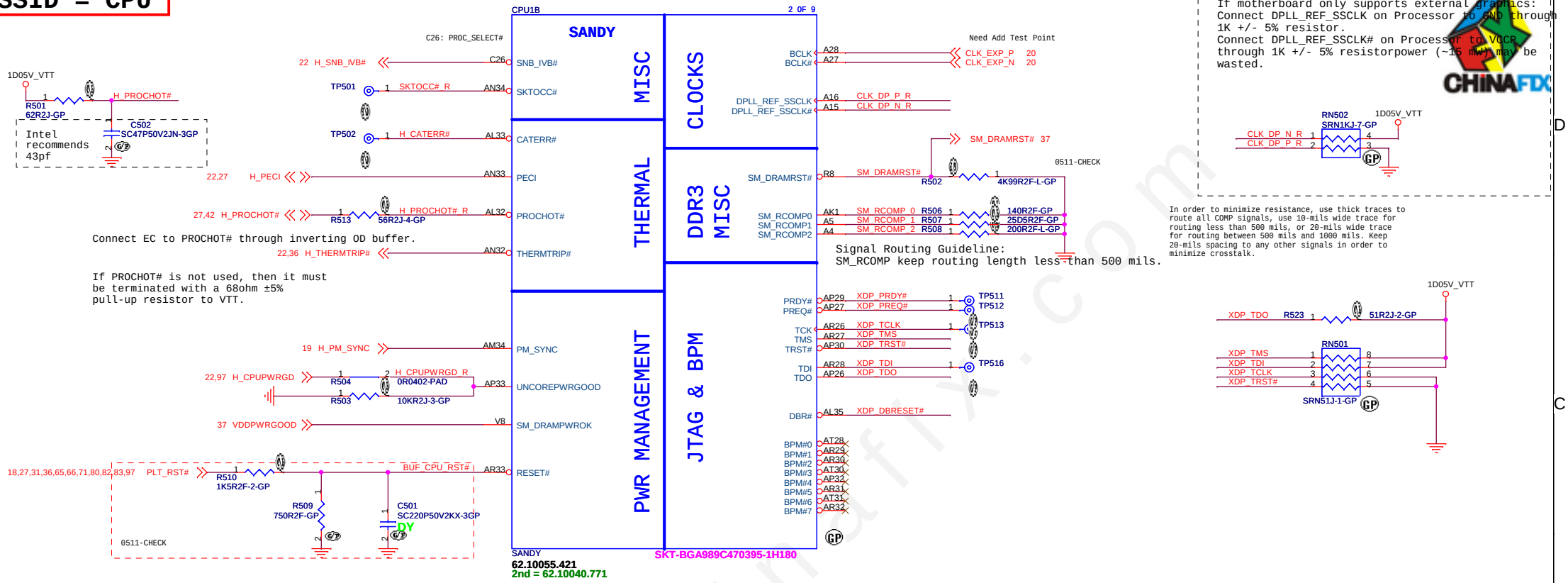

Connect EC to PROCHOT# through inverting OD buffer.

If PROCHOT# is not used, then it must be terminated with a 68ohm ±5% pull-up resistor to VTT.

Signal Routing Guideline:
SM_RCOMP keep routing length less than 500 mils.

Disabling Guidelines:
If motherboard only supports external graphics:
Connect DPLL_REF_SSCLK on Processor to GND through 1K +/- 5% resistor.
Connect DPLL_REF_SSCLK# on Processor to VCCP through 1K +/- 5% resistorpower (~15 mW) may be wasted.

In order to minimize resistance, use thick traces to route all COMP signals, use 10-mils wide trace for routing less than 500 mils, or 20-mils wide trace for routing between 500 mils and 1000 mils. Keep 20-mils spacing to any other signals in order to minimize crosstalk.

DEL U501
DEL R519
DEL C503
DEL R517
DEL R515

ASM R510
ASM R509

www.chinafix.com

<Core Design>

緯創資通 Wistron Corporation
21F,88,Sec.1,Hsin Tai Wu Rd.,Hsichih,
Taipei Hsien 221, Taiwan, R.O.C

Title: CPU (THERMAL/CLOCK/PM)

Size: A3 | Document Number: LA480 | Rev: SD

Date: Friday, January 06, 2012 | Sheet 5 of 103

SSID = CPU

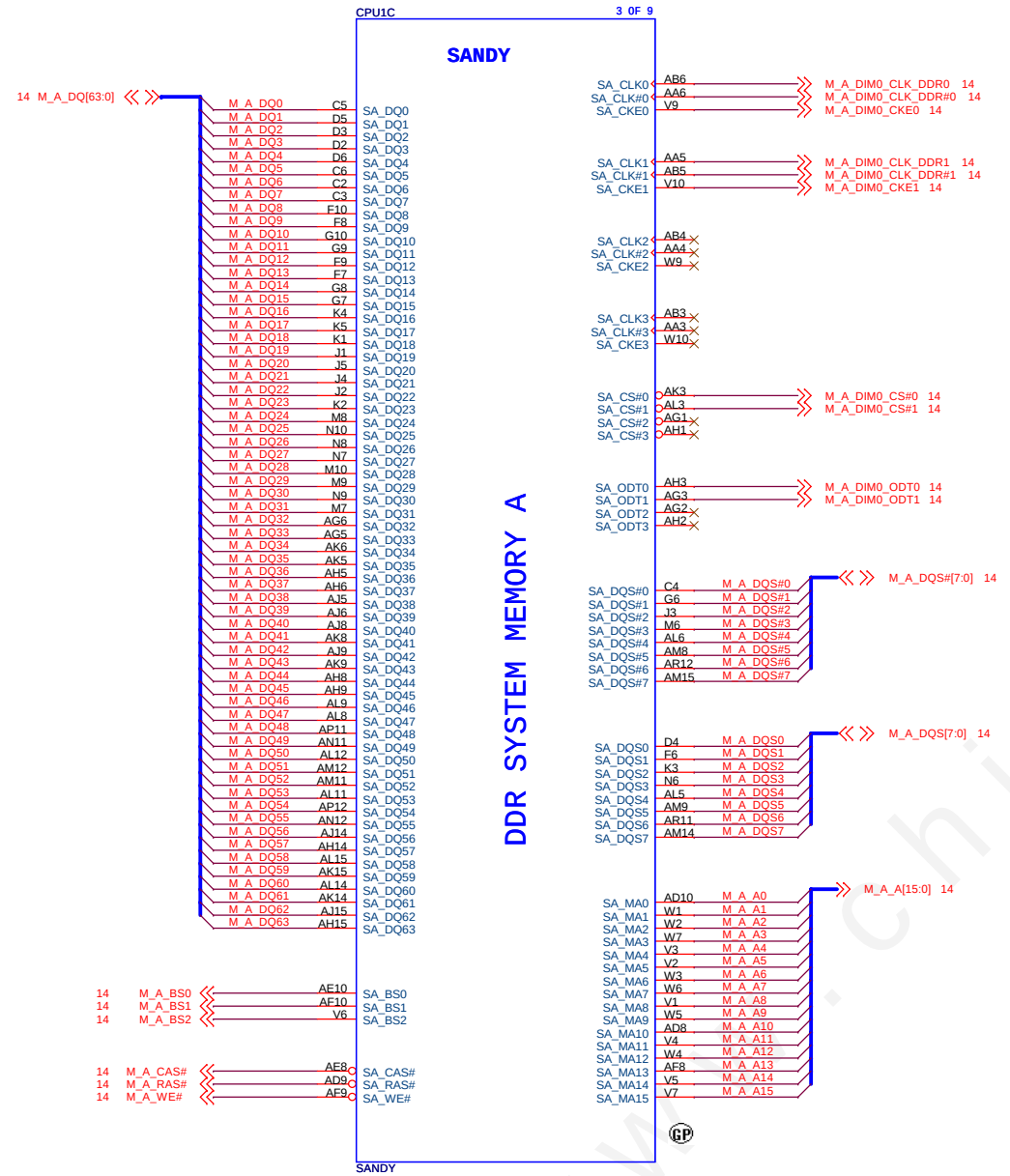

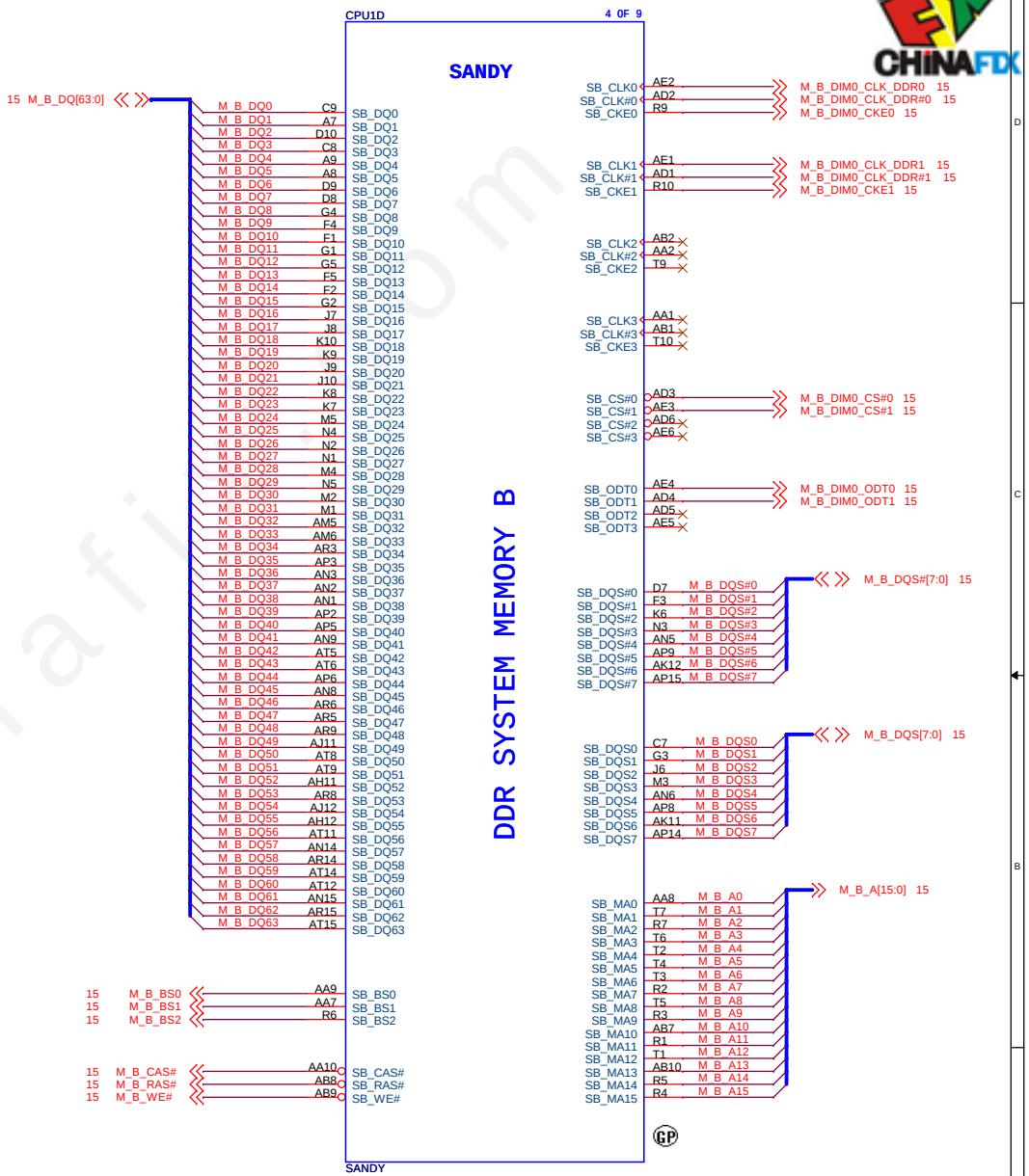

www.chinafix.com

<Core Design>

緯創資通 Wistron Corporation
21F, 88, Sec.1, Hsin Tai Wu Rd., Hsichih,
Taipei Hsien 221, Taiwan, R.O.C.

Title	CPU (DDR)	
Size A3	Document Number LA480	Rev SD
Date: Friday, January 06, 2012	Sheet 6 of 103	

SSID = CPU

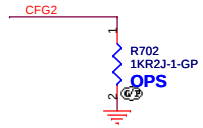

PEG Static Lane Reversal - CFG2 is for the 16x	
CFG2	1: Normal Operation; Lane # definition matches socket pin map definition 0:Lane Reversed

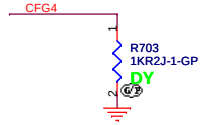

Display Port Presence Strap	
CFG4	1: Disabled; No Physical Display Port attached to Embedded Display Port 0: Enabled; An external Display Port device is connected to the Embedded Display Port

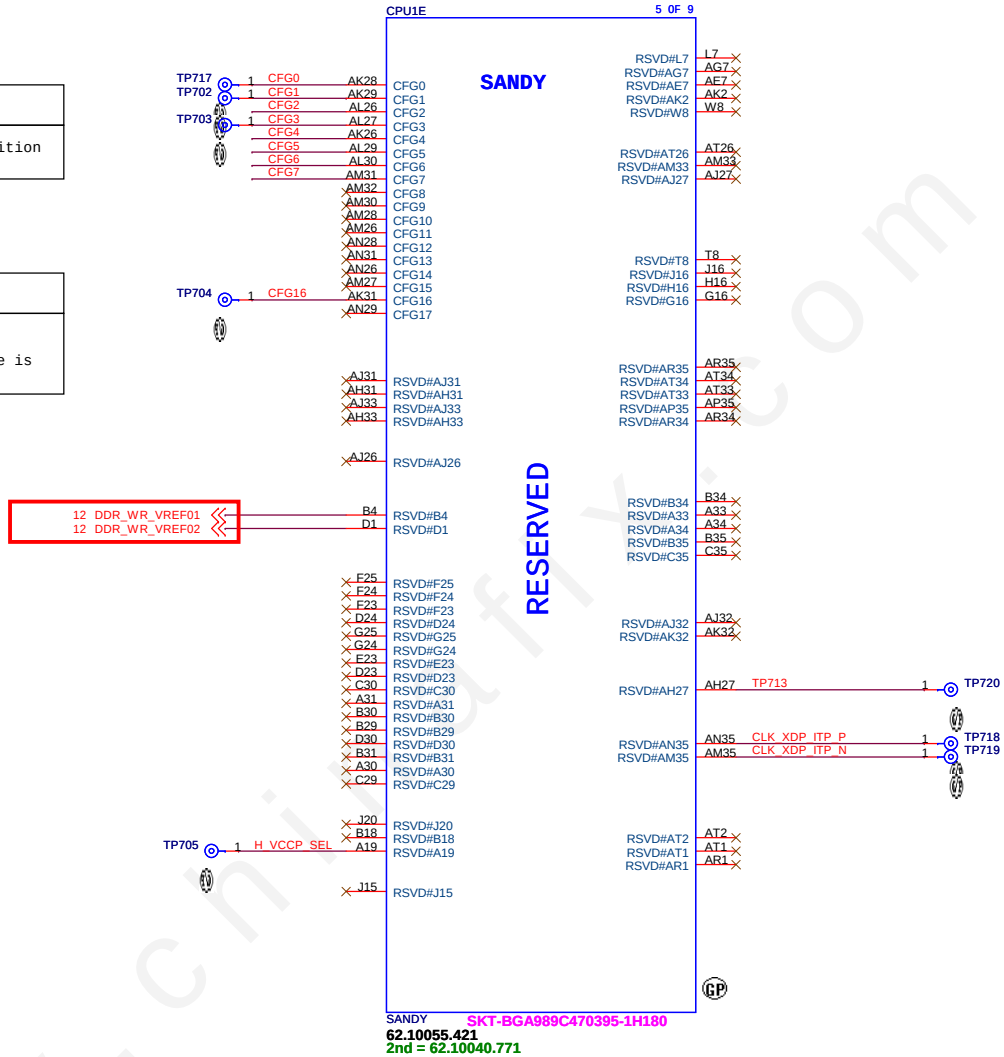

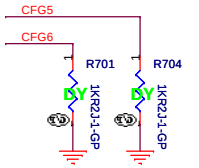

PCIE Port Bifurcation Straps	
CFG[6:5]	11: x16 - Device 1 functions 1 and 2 disabled 10: x8, x8 - Device 1 function 1 enabled ; function 2 disabled 01: Reserved - (Device 1 function 1 disabled ; function 2 enabled) 00: x8,x4,x4 - Device 1 functions 1 and 2 enabled

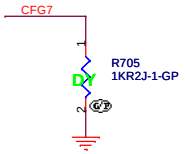

PEG DEFER TRAINING	
CFG7	1: PEG Train immediately following xxRESETB de assertion 0: PEG Wait for BIOS for training

www.chinafix.com

<Core Design>

緯創資通 Wistron Corporation
21F, 88, Sec.1, Hsin Tai Wu Rd., Hsichih,
Taipei Hsien 221, Taiwan, R.O.C.

Title: CPU (RESERVED)

Size: A3 | Document Number: LA480 | Rev: SD

Date: Friday, January 06, 2012 | Sheet 7 of 103

POWER

VCC CORE:53A

0511-CHECK CAP.

VCC_CORE

C801 C802 C803 C804 C811
C815 C817 C818 C819 C820
C816 C821 C822 C823 C824 C825 C826 C827
C837 C836 C835 C834 C833 C832 C831 C828

SC10U6D3V5KX-1GP

DY

CPU1F

6 OF 9

SANDY

VCC_CORE

AG35 AG34 AG33 AG32 AG31 AG30 AG29 AG28 AG27 AG26 AF35 AF34 AF33 AF32 AF31 AF30 AF29 AF28 AF27 AF26 AD35 AD34 AD33 AD32 AD31 AD30 AD29 AD28 AD27 AD26 AC35 AC34 AC33 AC32 AC31 AC30 AC29 AC28 AC27 AC26 AA35 AA34 AA33 AA32 AA31 AA30 AA29 AA28 AA27 AA26 Y35 Y34 Y33 Y32 Y31 Y30 Y29 Y28 Y27 Y26 V35 V34 V33 V32 V31 V30 V29 V28 V27 V26 U35 U34 U33 U32 U31 U30 U29 U28 U27 U26 R35 R34 R33 R32 R31 R30 R29 R28 R27 R26 P35 P34 P33 P32 P31 P30 P29 P28 P27 P26

VCC

CORE SUPPLY

PEG AND DDR

SVID

SENSE LINES

VCCIO:8.5A

0511-CHECK CAP.

0511-CHECK

1D05V_VTT

VCCIO: AH13 AH10 AG10 AC10 Y10 U10 P10 L10 J14 J13 J12 J11 H14 H12 H11 G14 G13 G12 F14 F13 F12 F11 E14 E12 E11 D14 D13 D12 D11 C14 C13 C12 C11 B14 B12 A14 A13 A12 A11 J23

C805 C806 C807 C808 C809 C810 C838 C839 C840 C841

C812 C813 C814 C829 C830 C842 C843 C844 C845

Reserve C846 & C847

1D05V_VTT

For CRB VIDSOUT need to pull high 130 ohm closr to CPU and IMVP7
For CRB VIDALERT# need to pull high 75 ohm close to CPU

R807 75R2F-2-GP 1D05V_VTT

VIDALERT# AJ29 H_CPU_SVIDALRT#
VIDSCLK AJ30 H_CPU_SVIDCLK
VIDSOUT AJ28 H_CPU_SVIDDAT

R803 43R2J-GP

VR_SVID_ALERT# 42
H_CPU_SVIDCLK 42
H_CPU_SVIDDAT 42

R804 130R2F-1-GP 1D05V_VTT

0511-CHECK

check
Place neer PCU pin.
1D05V_VTT

R808 10R2F-L-GP

VCCIO_SENSE

VSSIO_SENSE

R809 10R2F-L-GP

VCC_CORE

R801 100R2F-L1-GP-U

VCC_SENSE AJ35
VSS_SENSE AJ34

VCCSENSE 42
VSSSENSE 42

R802 100R2F-L1-GP-U

VCCIO_SENSE B10
VSSIO_SENSE A10

VCCIO_SENSE 45
VSSIO_SENSE 45

SANDY
62.10055.421
2nd = 62.10040.771

<Core Design>

緯創資通 Wistron Corporation
21F, 88, Sec.1, Hsin Tai Wu Rd., Hsichih,
Taipei Hsien 221, Taiwan, R.O.C.

Title	CPU (VCC_CORE)		
Size: Custom	Document Number: LA480		Rev: SD
Date: Friday, January 06, 2012	Sheet 8 of 103		

www.chinafix.com

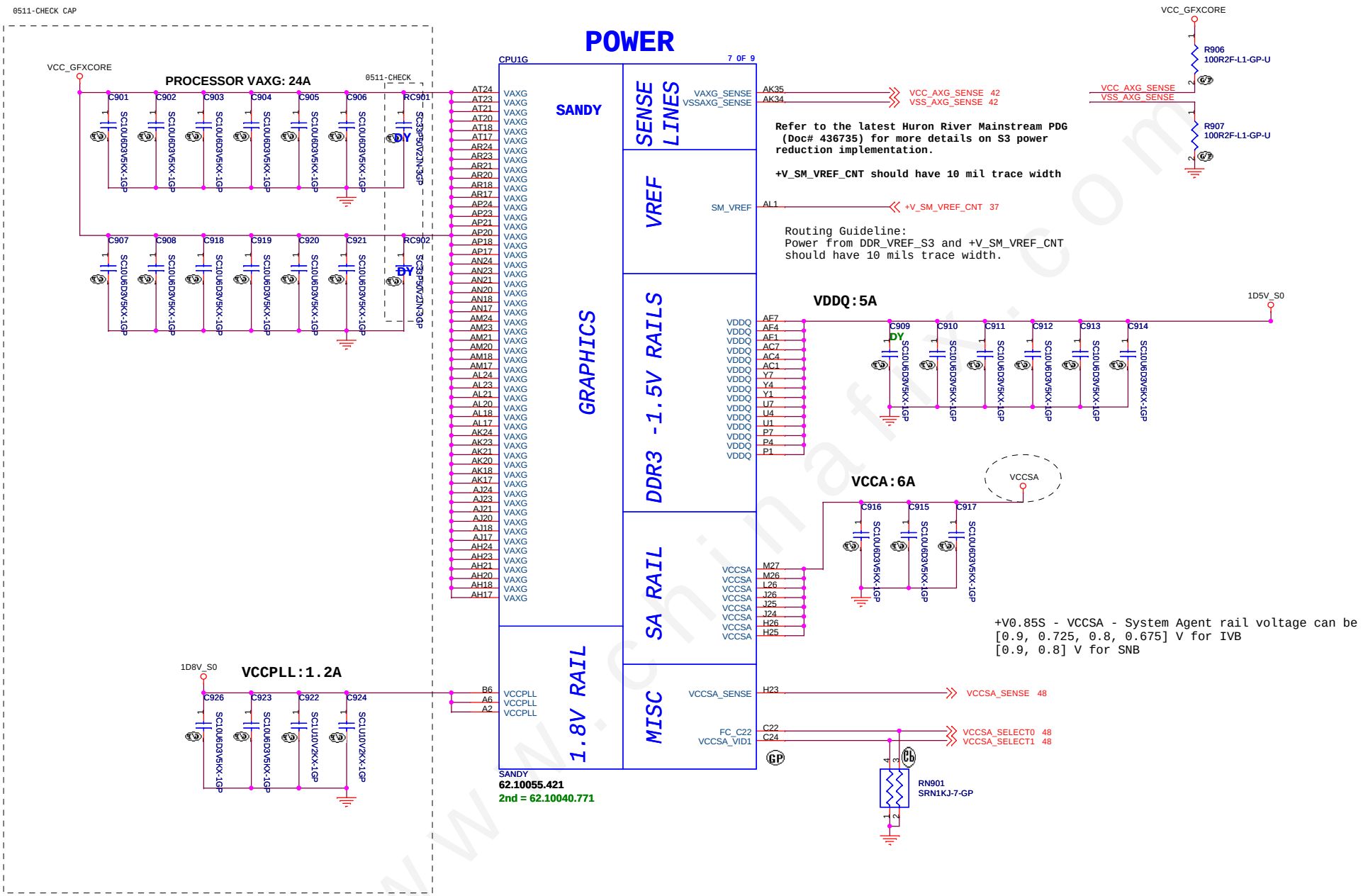

www.chinafix.com

<Core Design>

Wistron Corporation
21F, 88, Sec.1, Hsin Tai Wu Rd., Hsichih, Taipei Hsien 221, Taiwan, R.O.C.

Title: CPU (VCC_GFXCORE)

Size	Document Number	Rev
A3	LA480	SD

Date: Friday, January 06, 2012 Sheet 9 of 103

SSID = CPU

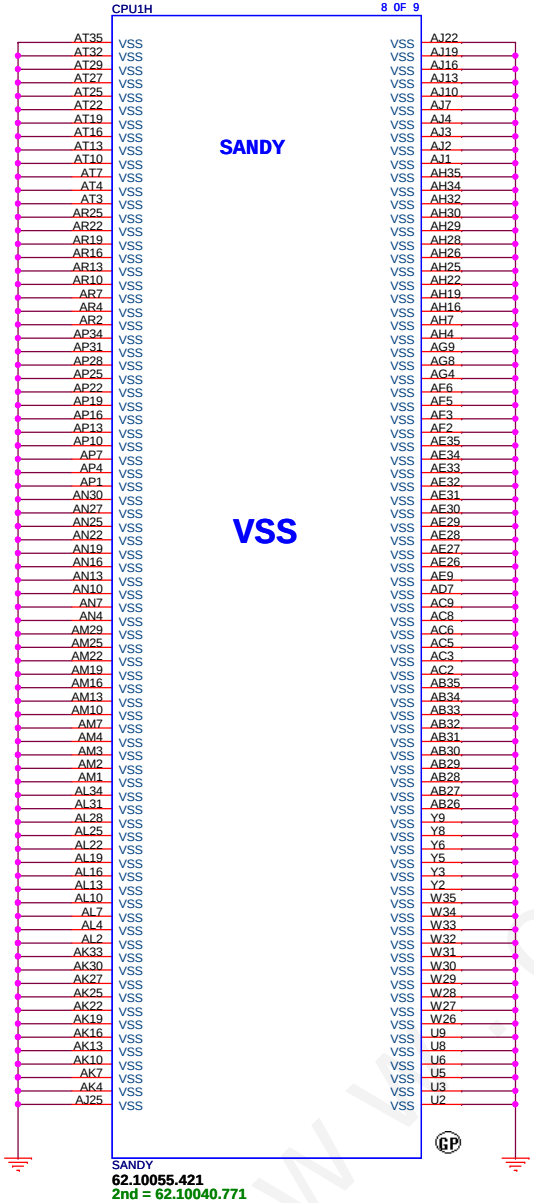

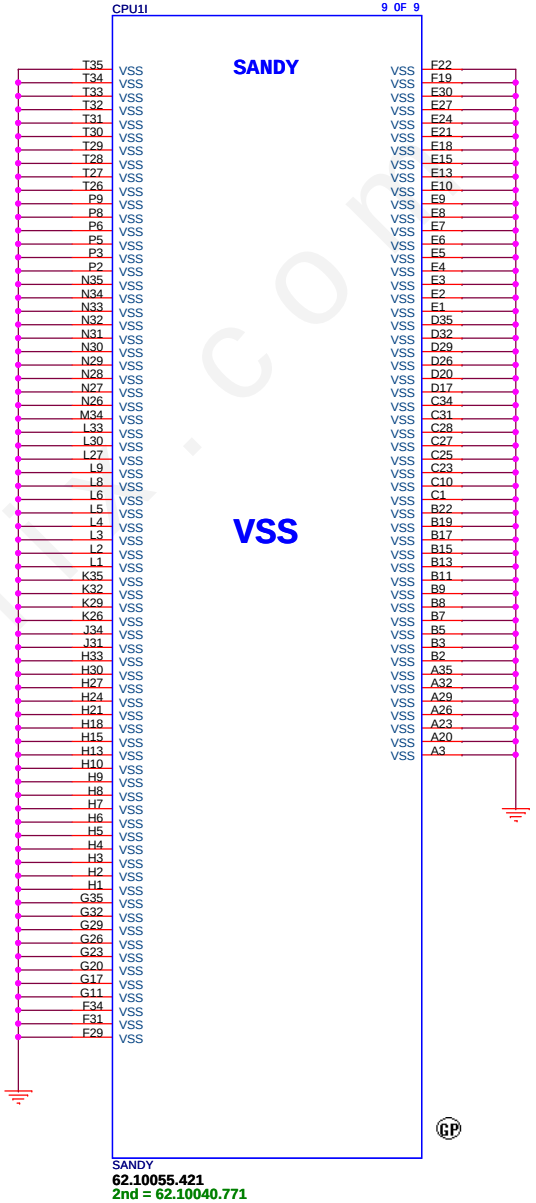

www.chinafix.com

<Core Design>

緯創資通 **Wistron Corporation**
21F, 88, Sec.1, Hsin Tai Wu Rd., Hsichih,
Taipei Hsien 221, Taiwan, R.O.C.

Title		
	CPU (VSS)	
Size A3	Document Number **LA480**	Rev **SD**
Date: Friday, January 06, 2012	Sheet 10 of 103	

BLANK

www.chinafix.com

<Core Design>

緯創資通
Wistron Corporation
21F,88,Sec.1,Hsin Tai Wu Rd.,Hsichih,
Taipei Hsien 221, Taiwan, R.O.C

Title	<Title>	
Size A4	Document Number LA480	Rev SD
Date: Friday, January 06, 2012	Sheet 11 of 103	

VREF circuit -M1 (Voltage Driver Network) & M3 (Driven by Processor) Implementation

CAD Note: All VREF traces should have 20:20 mil trace geometry. Note that while 20 mil trace width is optimal, short violations is acceptable if required due to tight routing constraints.

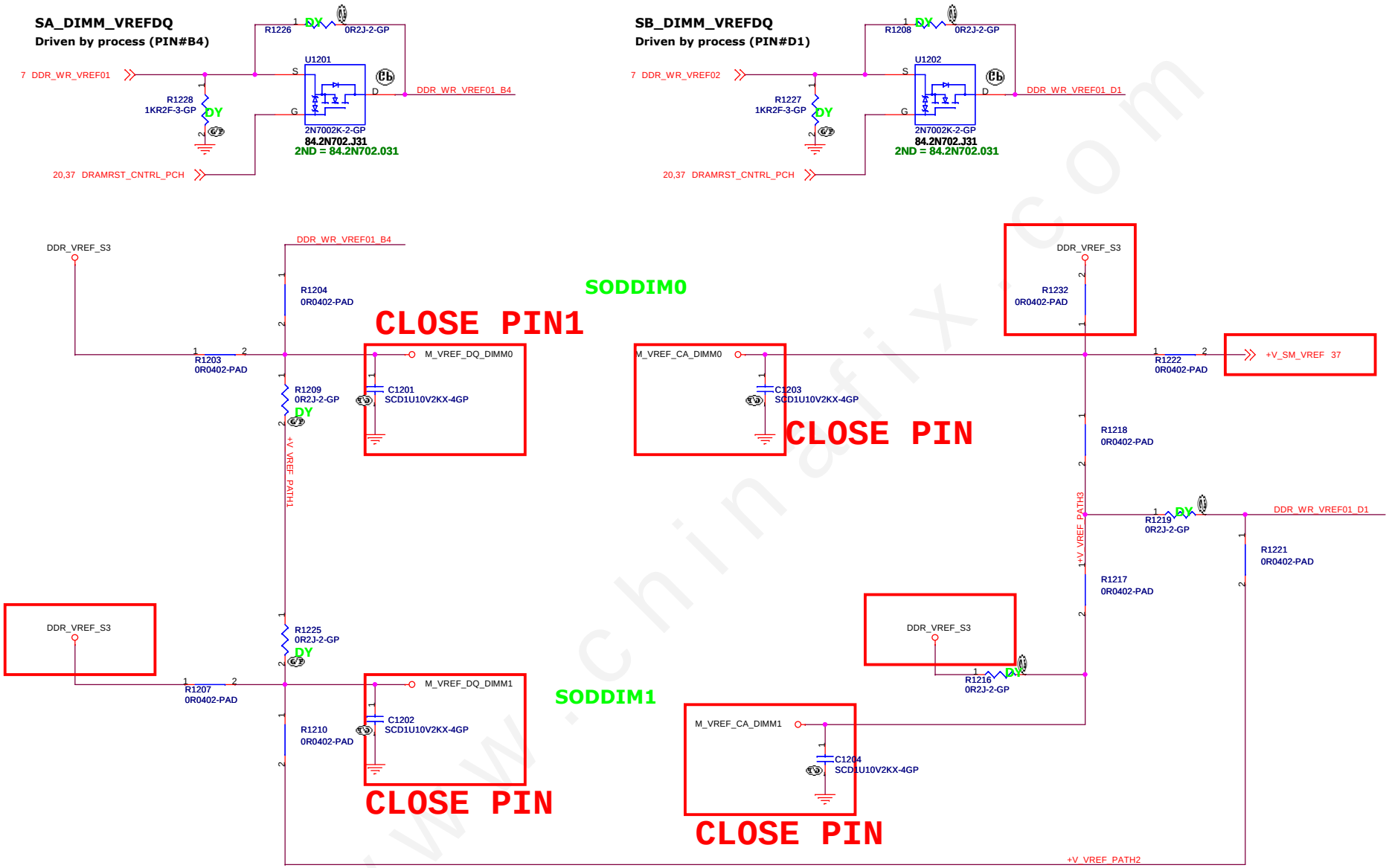

www.chinafix.com

<Core Design>

緯創資通 **Wistron Corporation**
21F, 88, Sec.1, Hsin Tai Wu Rd., Hsichih,
Taipei Hsien 221, Taiwan, R.O.C.

Title		
	M3	
Size A3	Document Number LA480	Rev SD
Date: Friday, January 06, 2012	Sheet 12 of 103	

BLANK

www.chinafix.com

<Core Design>

緯創資通
Wistron Corporation
21F,88,Sec.1,Hsin Tai Wu Rd.,Hsichih,
Taipei Hsien 221, Taiwan, R.O.C

Title	<Title>	
Size A4	Document Number LA480	Rev SD
Date: Friday, January 06, 2012	Sheet 13 of 103	

SSID = MEMORY

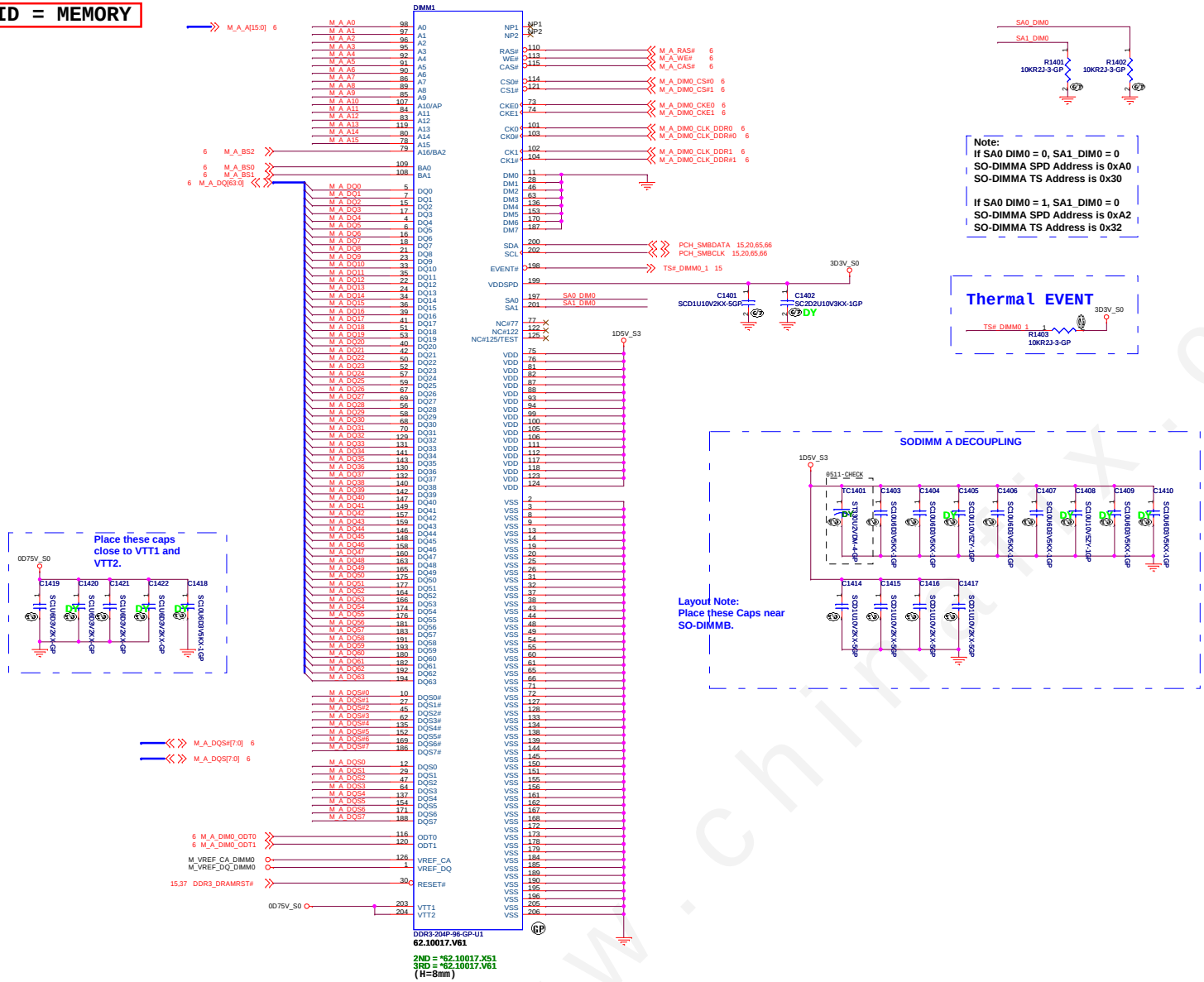

Note:
If SA0 DIM0 = 0, SA1_DIM0 = 0
SO-DIMMA SPD Address is 0xA0
SO-DIMMA TS Address is 0x30

If SA0 DIM0 = 1, SA1_DIM0 = 0
SO-DIMMA SPD Address is 0xA2
SO-DIMMA TS Address is 0x32

www.chinafix.com

<Core Design>

Wistron Corporation
21F, 88, Sec.1, Hsin Tai Wu Rd., Hsichih,
Taipei Hsien 221, Taiwan, R.O.C.

Title: DDR3-SODIMM1

Size	Document Number	Rev
A2	LA480	SD

Date: Friday, January 06, 2012 Sheet 14 of 103

SSID = MEMORY

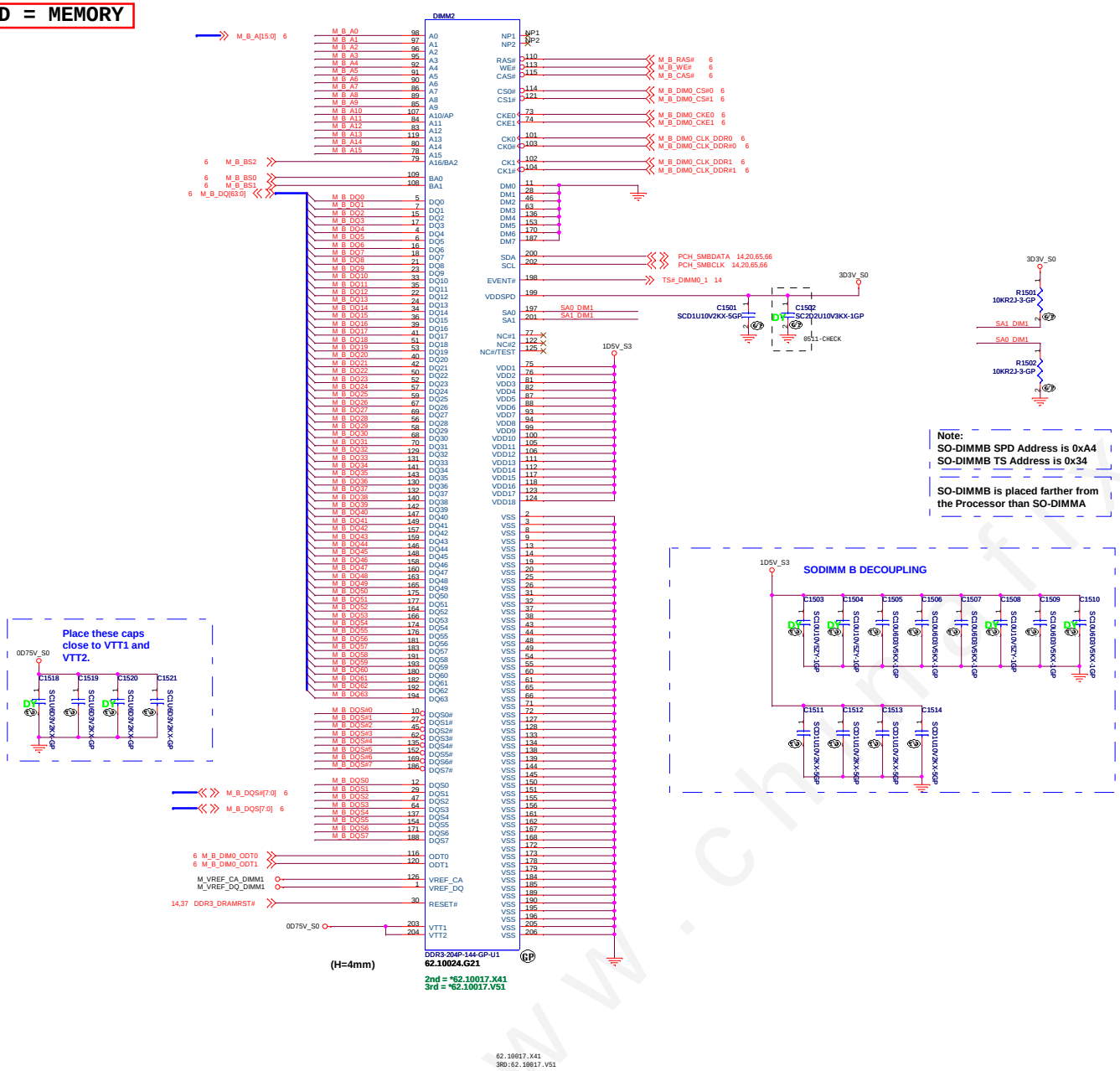

Note:
SO-DIMMB SPD Address is 0xA4
SO-DIMMB TS Address is 0x34

SO-DIMMB is placed farther from the Processor than SO-DIMMA

www.chinafix.com

<Core Design>
緯創資通 Wistron Corporation
21F, 88, Sec.1, Hsin Tai Wu Rd., Hsichih, Taipei Hsien 221, Taiwan, R.O.C.

Title: **DDR3-SODIMM2**

Size	Document Number	Rev
A2	LA480	SD

Date: Friday, January 06, 2012 Sheet 15 of 103

BLANK

www.chinafix.com

<Core Design>

緯創資通 Wistron Corporation
21F, 88, Sec.1, Hsin Tai Wu Rd., Hsichih,
Taipei Hsien 221, Taiwan, R.O.C.

Title	DDR3-SODIMM2	
Size A4	Document Number LA480	Rev SD
Date: Friday, January 06, 2012	Sheet 16 of 103	

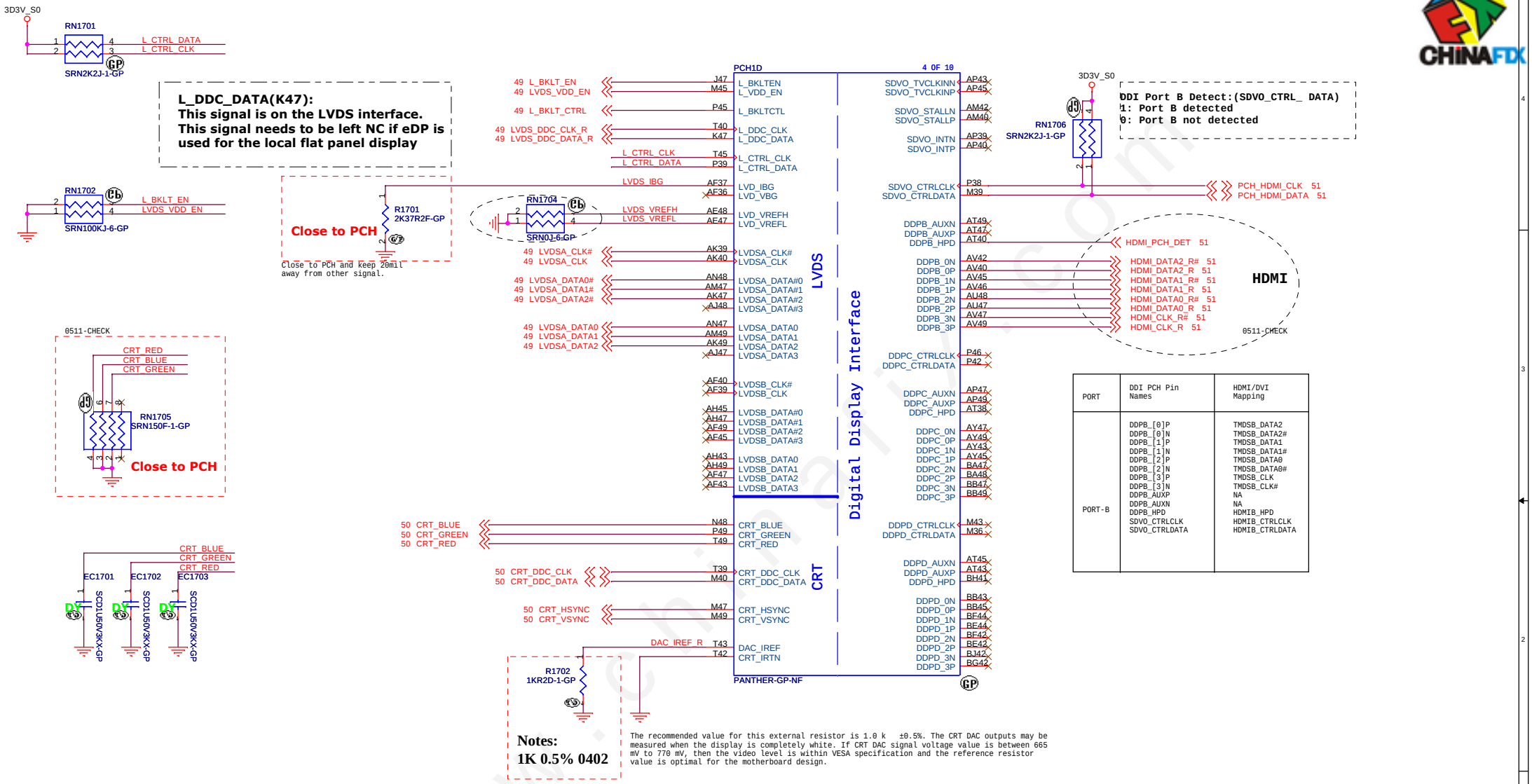

PORT	DDI PCH Pin Names	HDMI/DVI Mapping
PORT-B	DDPB_[0]P DDPB_[0]N DDPB_[1]P DDPB_[1]N DDPB_[2]P DDPB_[2]N DDPB_[3]P DDPB_[3]N DDPB_AUXP DDPB_AUXN DDPB_HPD SDVO_CTRLCLK SDVO_CTRLDATA	TMDSB_DATA2 TMDSB_DATA2# TMDSB_DATA1 TMDSB_DATA1# TMDSB_DATA0 TMDSB_DATA0# TMDSB_CLK TMDSB_CLK# NA NA HDMIB_HPD HDMIB_CTRLCLK HDMIB_CTRLDATA

<Core Design>

Wistron Corporation
21F, 88, Sec.1, Hsin Tai Wu Rd., Hsichih, Taipei Hsien 221, Taiwan, R.O.C.

Title: PCH : LVDS/CRT/DDI

Size: A3 | Document Number: LA480 | Rev: SD

Date: Friday, January 06, 2012 | Sheet 17 of 103

www.chinafix.com

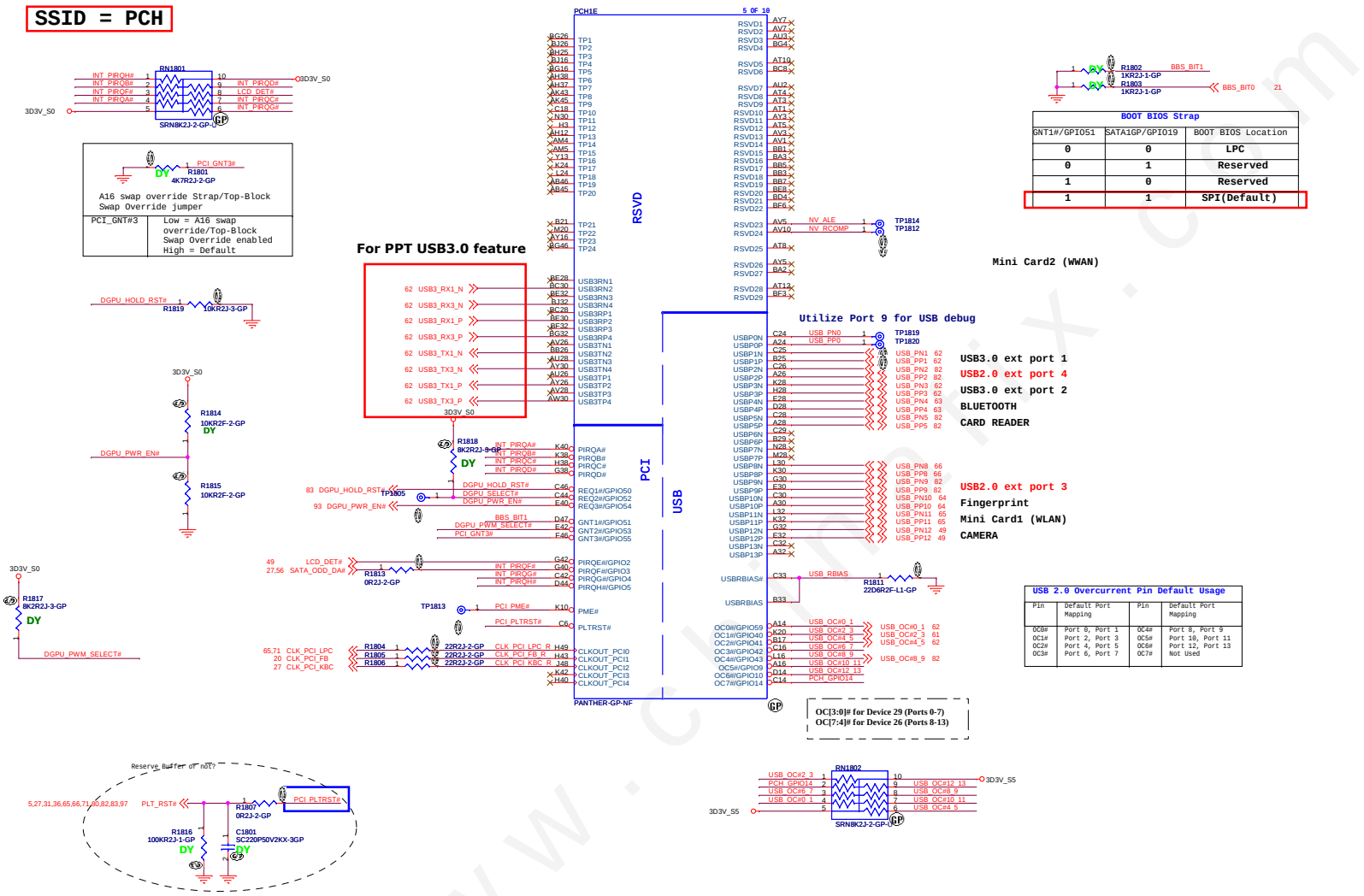

BOOT BIOS Strap		
GNT1#/GPIO51	SATA1GP/GPIO19	BOOT BIOS Location
0	0	LPC
0	1	Reserved
1	0	Reserved
1	1	SPI(Default)

Gx8 USB Table

Pair	Device
0	X
1	USB3.0, ext port1
2	USB2.0, ext port4
3	USB3.0, ext port2
4	Bluetooth
5	CARD READER
6	X
7	X
8	3G
9	USB2.0, ext. port 3
10	Finger Print
11	Mini Card1 (WLAN)
12	CAMERA
13	X

USB 2.0 Overcurrent Pin Default Usage			
Pin	Default Port Mapping	Pin	Default Port Mapping
OC0#	Port 0, Port 1	OC4#	Port 8, Port 9
OC1#	Port 2, Port 3	OC5#	Port 10, Port 11
OC2#	Port 4, Port 5	OC6#	Port 12, Port 13
OC3#	Port 6, Port 7	OC7#	Not Used

www.chinafix.com

<Core Design>
緯創資通 Wistron Corporation
21F, 88, Sec.1, Hsin Tai Wu Rd., Hsichih, Taipei Hsien 221, Taiwan, R.O.C.

Title: PCH : PCI/USB/NVRAM/RSVD

Size: A2 | Document Number: LA480 | Rev: SD

Date: Friday, January 06, 2012 | Sheet 18 of 103

SSID = PCH

For platforms not supporting Deep S4/S5
1.VccSUS3_3 and VccDSW3_3 will rise at the same time (connected on board)
2.DPWROK and RSMRST# will rise at the same time (connected on board)
3.SLP_SUS# and SUSACK# are left as 'no connect'
4.SUSWARN# used as SUSPWRDNACK/GPIO30

Signal Routing Guideline:
DMI_ZCOMP keep W=4 mils and routing length less than 500 mils.
DMI_IRCOMP keep W=4 mils and routing length less than 500 mils.

PCH1C — 3 OF 10 — PANTHER-GP-NF

DMI: DMI0RXN, DMI1RXN, DMI2RXN, DMI3RXN, DMI0RXP, DMI1RXP, DMI2RXP, DMI3RXP, DMI0TXN, DMI1TXN, DMI2TXN, DMI3TXN, DMI0TXP, DMI1TXP, DMI2TXP, DMI3TXP, DMI_ZCOMP, DMI_IRCOMP, DMI2RBIAS

FDI: FDI_RXN0, FDI_RXN1, FDI_RXN2, FDI_RXN3, FDI_RXN4, FDI_RXN5, FDI_RXN6, FDI_RXN7, FDI_RXP0, FDI_RXP1, FDI_RXP2, FDI_RXP3, FDI_RXP4, FDI_RXP5, FDI_RXP6, FDI_RXP7, FDI_INT, FDI_FSYNC0, FDI_FSYNC1, FDI_LSYNC0, FDI_LSYNC1

System Power Management: SUSACK#, SYS_RESET#, SYS_PWROK, PWROK, APWROK, DRAMPWROK, RSMRST#, SUSWARN#/SUSPWRDNACK/GPIO30, PWRBTN#, ACPRESENT/GPIO31, BATLOW#/GPIO72, RI#, DSWVRMEN, DPWROK, WAKE#, CLKRUN#/GPIO32, SUS_STAT#/GPIO61, SUSCLK/GPIO62, SLP_S5#/GPIO63, SLP_S4#, SLP_S3#, SLP_A#, SLP_SUS#, PMSYNCH, SLP_LAN#/GPIO29

DSWODVREN - On Die DSW VR Enable

HIGH	Enabled (DEFAULT)
LOW	Disabled

Platforms supporting Deep S4/S5, but not will to participate in the handshake during wake and Deep S4/S5 entry may tie SUSACK# to SUSWARN#.

SUS_ACK#: For non-DWS platforms, this signal can be left unconnected. Due to the internal pull-up on this signal it will be pulled high in order for the boot sequence to proceed.

SYS_PWROK: the system is ready to start the exit from reset (de-asserts PLT_RST# to the processor)

PWROK: it indicates to PCH that its CORE well power is stable.

Active Sleep Well (ASW) Power OK

S0_PWR_GOOD after PM_SLP_S3# delay 200 ms

This signal is used to control power planes to the IntelR ME sub-system. This signal will be asserted in M-off state. If M3 is not supported then SLP_A# will have the same timings as SLP_S3#.

For platforms supporting DEEP S4/S5 state, a low on this signal indicates that PCH is in Deep Sleep state and that EC/platform logic does not need to keep the Suspend Rails ON.
If high means EC must keep SUS rails ON.
If DEEP S4/S5 is not supported, then this pin can be left unconnected.

SUSPWRDNACK : No longer requires a 10-K pull-up to VccSUS (3.3 V).

PCH_WAKE#
CRB : 1K
CHKLIST: 10K

www.chinafix.com

<Core Design>

Wistron Corporation
21F, 88, Sec.1, Hsin Tai Wu Rd., Hsichih, Taipei Hsien 221, Taiwan, R.O.C.

Title: PCH : DMI/FDI/PM

Size	Document Number	Rev
A2	LA480	SD

Date: Friday, January 06, 2012 Sheet 19 of 103

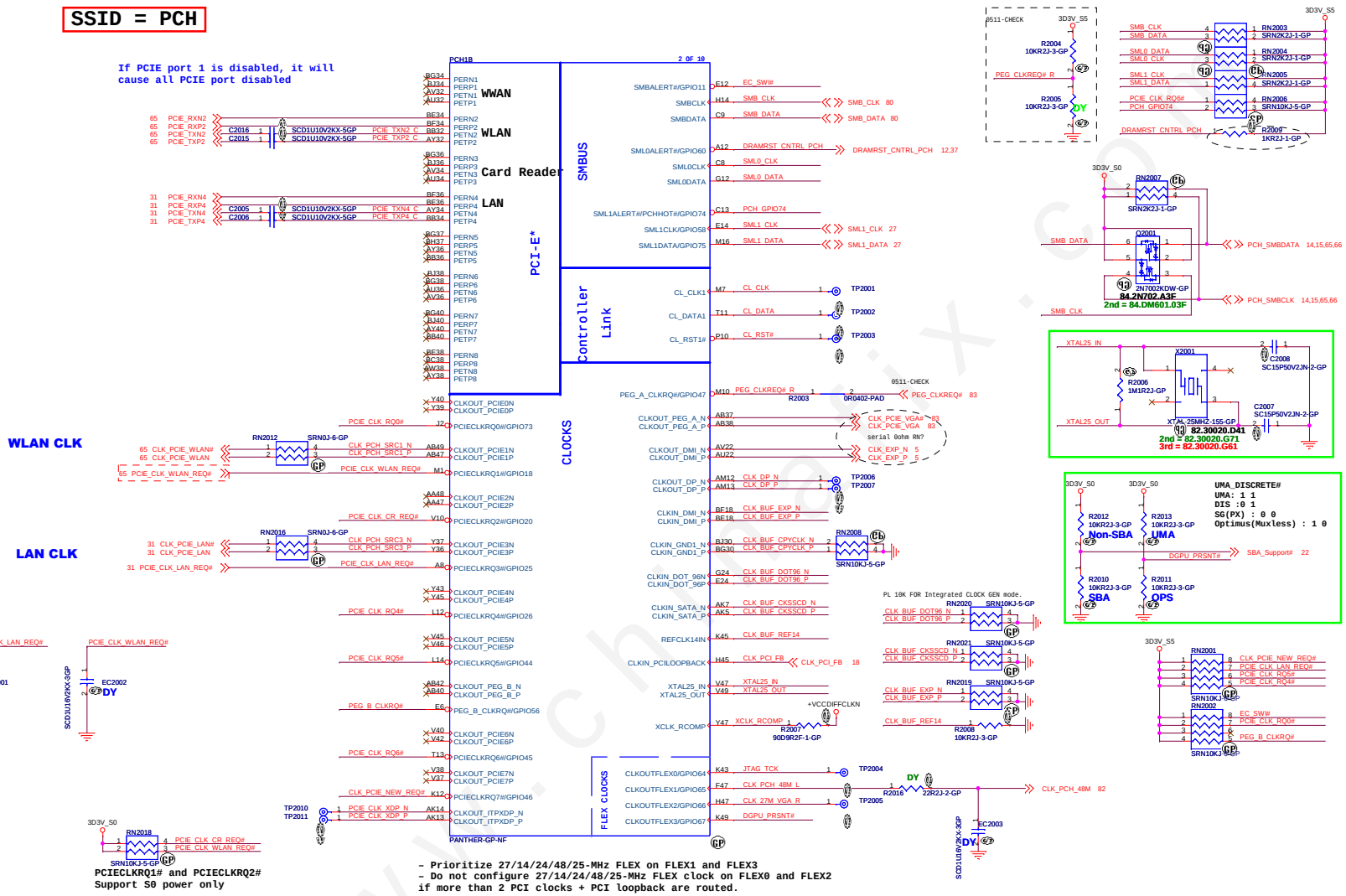

www.chinafix.com

<Core Design>

Wistron Corporation
21F, 88, Sec.1, Hsin Tai Wu Rd., Hsichih, Taipei Hsien 221, Taiwan, R.O.C.

Title: PCH : PCIE/SMBUS/CLK

Size	Document Number	Rev
A2	LA480	SD

Date: Friday, January 06, 2012 Sheet 20 of 103

SSID = PCH

INTVRMEN- Integrated SUS 1.05V VRM Enable
High - Enable internal VRs
Low - Enable external VRs

PCH1A — 1 OF 10 — PANTHER-GP-NF

RTC: RTCX1, RTCX2, RTCRST#, SRTCRST#, INTRUDER#, INTVRMEN
LPC: FWH0/LAD0, FWH1/LAD1, FWH2/LAD2, FWH3/LAD3, FWH4/LFRAME#, LDRQ0#, LDRQ1#/GPIO23, SERIRQ
IHDA: HDA_BCLK, HDA_SYNC, SPKR, HDA_RST#, HDA_SDIN0, HDA_SDIN1, HDA_SDIN2, HDA_SDIN3, HDA_SDO, HDA_DOCK_EN#/GPIO33, HDA_DOCK_RST#/GPIO13
SATA 6G: SATA0RXN/RXP, SATA0TXN/TXP, SATA1RXN/RXP, SATA1TXN/TXP
SATA: SATA2RXN/RXP, SATA2TXN/TXP, SATA3RXN/RXP, SATA3TXN/TXP, SATA4RXN/RXP, SATA4TXN/TXP, SATA5RXN/RXP, SATA5TXN/TXP, SATAICOMPO, SATAICOMPI, SATA3RCOMPO, SATA3COMPI, SATA3RBIAS, SATALED#, SATA0GP/GPIO21, SATA1GP/GPIO19
JTAG: JTAG_TCK, JTAG_TMS, JTAG_TDI, JTAG_TDO
SPI: SPI_CLK, SPI_CS0#, SPI_CS1#, SPI_MOSI, SPI_MISO

m-SATA
HDD1
mSATA, CRV USE PORT2
ODD
E-SATA

Check with SW

Notes:
ME_UNLOCK (HDA_SDO) connect to EC.
Make sure EC drive this pin "low" all the time.

Flash Descriptor Security Overide	
HDA_SDOUT	Low = Default High = Enable

NO REBOOT STRAP

No Reboot Strap	
HDA_SPKR	Low = Default High = No Reboot

This signal has a weak internal pull down.
On Die PLL VR is supplied by 1.5V when sampled high, 1.8 V when sampled low.
Needs to be pulled High for Huron River platform.
co-operate with R2310

PLL ODVR VOLTAGE	
HDA_SYNC	Low = 1.8V (Default) High = 1.5V

This signal has a weak internal pull-down.
On Die PLL VR is supplied by 1.5 V from VccVRM when sampled high, 1.8 V from VccVRM when sampled low.

HDA_SYNC: This strap is sampled on rising edge of RSMRST# and is used to sample 1.5V VccVRM supply mode. 1K external pull-up resistor is required on this signal on the board. Signal may have leakage paths via powered off devices (Audio Codec) and hence contend with the external pull-up. A blocking FET is recommended in such a case to isolate HDA_SYNC from the Audio Codec device until after the Strap sampling is complete.

84.2N702.J31
2ND = 84.2N702.031

www.chinafix.com

<Core Design>

Wistron Corporation
21F, 88, Sec.1, Hsin Tai Wu Rd., Hsichih, Taipei Hsien 221, Taiwan, R.O.C.

Title: PCH : HDA/JTAG/SATA
Size: A2 | Document Number: LA480 | Rev: SD
Date: Friday, January 06, 2012 | Sheet 21 of 103

R2202
HR:200K (64.20035.6DL)
CRV:10K (63.10334.1DL)

3D3V_S0 — R2202 10KR2J-3-GP — SATA_ODD_PRSNT#

3D3V_S0 — RN2203 SRN10KJ-5-GP — H_A20GATE, H_RCIN#

GPIO27 has a weak[20K] internal pull up. To enable on-die PLL Voltage regurator, should not place external pull down.

G-Sensor	ST	KIXNOK
R2226	DY	10K
R2221	10K	DY

Note:
For PCH debug with XDP, need to NO STUFF R2218

PCH1F — 6 OF 10

GPIO / CPU/MISC / NCTF

Signal	Pin	Signal	Pin
BMBUSY#/GPIO0	T7	TACH4/GPIO68	C40
TACH1/GPIO1	A42	TACH5/GPIO69	B41
TACH2/GPIO6	H36	TACH6/GPIO70	C41
TACH3/GPIO7	E38	TACH7/GPIO71	A40
GPIO8	C10		
LAN_PHY_PWR_CTRL/GPIO12	C4	A20GATE	P4
GPIO15	G2	PECI	AU16
SATA4GP/GPIO16	U2	RCIN#	P5
TACH0/GPIO17	D40	PROCPWRGD	AY11
SCLOCK/GPIO22	T5	THRMTRIP#	AY10
GPIO24	E8	INIT3_3V#	T14
GPIO27	E16	DF_TVS	AY1
GPIO28	P8	TS_VSS1	AH8
STP_PCI#/GPIO34	K1	TS_VSS2	AK11
GPIO35	K4	TS_VSS3	AH10
SATA2GP/GPIO36	V8	TS_VSS4	AK10
SATA3GP/GPIO37	M5	NC_1	P37
SLOAD/GPIO38	N2	VSS_NCTF_15#BG2	BG2
SDATAOUT0/GPIO39	M3	VSS_NCTF_16#BG48	BG48
SDATAOUT1/GPIO48	V13	VSS_NCTF_17#BH3	BH3
SATA5GP/GPIO49/TEMP_ALERT#	V3	VSS_NCTF_18#BH47	BH47
GPIO57	D6	VSS_NCTF_19#BJ4	BJ4
		VSS_NCTF_20#BJ44	BJ44
VSS_NCTF_1#A4	A4	VSS_NCTF_21#BJ45	BJ45
VSS_NCTF_2#A44	A44	VSS_NCTF_22#BJ46	BJ46
VSS_NCTF_3#A45	A45	VSS_NCTF_23#BJ5	BJ5
VSS_NCTF_4#A46	A46	VSS_NCTF_24#BJ6	BJ6
VSS_NCTF_5#A5	A5	VSS_NCTF_25#C2	C2
VSS_NCTF_6#A6	A6	VSS_NCTF_26#C48	C48
VSS_NCTF_7#B3	B3	VSS_NCTF_27#D1	D1
VSS_NCTF_8#B47	B47	VSS_NCTF_28#D49	D49
VSS_NCTF_9#BD1	BD1	VSS_NCTF_29#E1	E1
VSS_NCTF_10#BD49	BD49	VSS_NCTF_30#E49	E49
VSS_NCTF_11#BE1	BE1	VSS_NCTF_31#F1	F1
VSS_NCTF_12#BE49	BE49	VSS_NCTF_32#F49	F49
VSS_NCTF_13#BF1	BF1		
VSS_NCTF_14#BF49	BF49		

NCTF_TEST_PIN, A1,A43,A47,B1,B2,A5,B3,B47, B51,B8646,B61,B62,BF40,BP1,BF42, BG2,B8646,BH3,BH47,BJ4,BJ44, BJ45,BJ46,BJ5,BJ6,C2,C48,D1, D49,E1,E49,F1,F49

PANTHER-GP-NF

Signal	Pin	Signal	Pin
S_GPIO	R2218	GPIO0	100R2J-2-GP
EC_SMI#			
DGPU_HPD_INTR#			
EC_SCI#			
ICC_EN#			
RTC_DET#			
PCH_GPIO15			
PCH_GPIO16	R2215	SATA_ODD_PRSNT#	0R2J-2-GP
DGPU_PWROK_C	R2216	DGPU_PWROK	0R2J-2-GP
PCH_GPIO22			
Gsensor_ID			
PCH_GPIO27			
PLL_ODVR_EN			
PSW_CLR#			
FP_DET#			
DMI_OVRVLTG			
FDI_OVRVLTG			
MFG_MODE			
GFX_CRB_DET			
PCH_GPIO48			
PCH_TEMP_ALERT#			
USB3_PWR_ON			
PCH_NCTF_1	TP2206		
PCH_NCTF_7	TP2212		
PCH_NCTF_2	TP2207		
PCH_NCTF_3	TP2208		
PCH_NCTF_4	TP2209		
PCH_NCTF_9	TP2214		
PCH_NCTF_10	TP2215		
PCH_NCTF_5	TP2210		
PCH_NCTF_8	TP2213		
PCH_NCTF_6	TP2211		
SATA_ODD_PWRGT	56		
SBA_Support#	20		
VRAM_SIZE1			
VRAM_SIZE2			
H_A20GATE	27		
H_PECI_R	R2203	H_PECI	5,27
H_RCIN#	27		
H_CPUPWRGD	5,97		
PCH_THERMTRIP_R	R2204	H_THERMTRIP#	5,36
INIT3_3V#	TP2201		
NV_CLE			
TS_VSS	R2219		

1D8V_S0 — R1808 2K2R2J-2-GP — NV_CLE — R1809 1KR2J-1-GP — H_SNB_IVB# 5

DMI & FDI Termination Voltage	
NV_CLE	Set to Vss when LOW Set to Vcc when HIGH

PROCPWRGD (PCH) --> UNCOREPOWRGOOD (CPU)
Indicates that VccSA, VDDQ, VccA (1.8V) and VccIO power supplies are stable. This signal will be asserted only after PWROK assertion.

TS Signal Disable Guideline:
TS_VSS1, TS_VSS2, TS_VSS3 and TS_VSS4 should not float on the motherboard. They should be tied to GND directly.

3D3V_S0 — R2207 10KR2J-3-GP — FDI_OVRVLTG — R2208 10KR2J-3-GP

FDI TERMINATION VOLTAGE OVERRIDE	
GPIO37 (FDI_OVRVLTG)	LOW - Tx, Rx terminated to same voltage (DC Coupling Model DEFAULT)

3D3V_S0 — R2209 10KR2J-3-GP — DMI_OVRVLTG — R2210 10KR2J-3-GP

DMI TERMINATION VOLTAGE OVERRIDE	
GPIO36 (DMI_OVRVLTG)	LOW - Tx, Rx terminated to same voltage (DC Coupling Model DEFAULT)

3D3V_S0 — R2220 10KR2J-3-GP — PCH_GPIO48; R2224 10KR2J-3-GP — FP_DET#; R2222 10KR2J-3-GP — PCH_TEMP_ALERT#

RN2201 SRN10KJ-6-GP: EC_SMI#, EC_SCI#, DGPU_HPD_INTR#, PCH_GPIO22

R2225 10KR2J-3-GP — PSW_CLR#; R2228 10KR2J-3-GP — MFG_MODE; R2229 10KR2J-3-GP — PCH_GPIO27

3D3V_S5 — RN2204 SRN10KJ-5-GP — RTC_DET#, USB3_PWR_ON

R2201 1KR2J-1-GP — PCH_GPIO15; R2234 10KR2J-3-GP — PLL_ODVR_EN

3D3V_S5 — R2221 10KR2J-3-GP — Gsensor_ID; R2226 10KR2J-3-GP

G2201 GAP-OPEN

R2223 10KR2J-3-GP — FP_DET#

	INTERNAL GFX	EXTERNAL GFX
R2205	DY	10K
R2206	100K	DY

3D3V_S0 — R2205 10KR2J-3-GP — GFX_CRB_DET; R2206 100KR2J-1-GP

3D3V_S0 — R2230 10KR2J-3-GP — VRAM_SIZE1; R2232 10KR2J-3-GP — VRAM_SIZE2

PLL ON DIE VR ENABLE
NOTE:This signal has a weak internal pull-up 20K ENABLED -- HIGH (R2212 UNSTUFFED) DEFAULT DISABLED -- LOW (R2212 STUFFED)

PLL_ODVR_EN — R2212 1KR2J-1-GP

Integrated Clock Enable functionality is achieved via soft-strap. The default is integrated clock enable.

ICC_EN# — R2211 1KR2J-1-GP

R2211 BOM CTRL
HR:1K
CRV:DY

Integrated Clock Chip Enable	
ICC_EN#	HIGH (R2211 DY)- DISABLED [DEFAULT] LOW (R2211)- ENABLED

GPIO8 has a weak[20K] internal pull up.
Integrated Clock Enable functionality is achieved via soft-strap. The default is integrated clock enable.

www.chinafix.com

<Core Design>

Wistron Corporation
21F, 88, Sec.1, Hsin Tai Wu Rd., Hsichih, Taipei Hsien 221, Taiwan, R.O.C.

Title: PCH : GPIO/NTCF/MISC
Size: A2 | Document Number: LA480 | Rev: SD
Date: Friday, January 06, 2012 | Sheet 22 of 103

SSID = PCH

6A

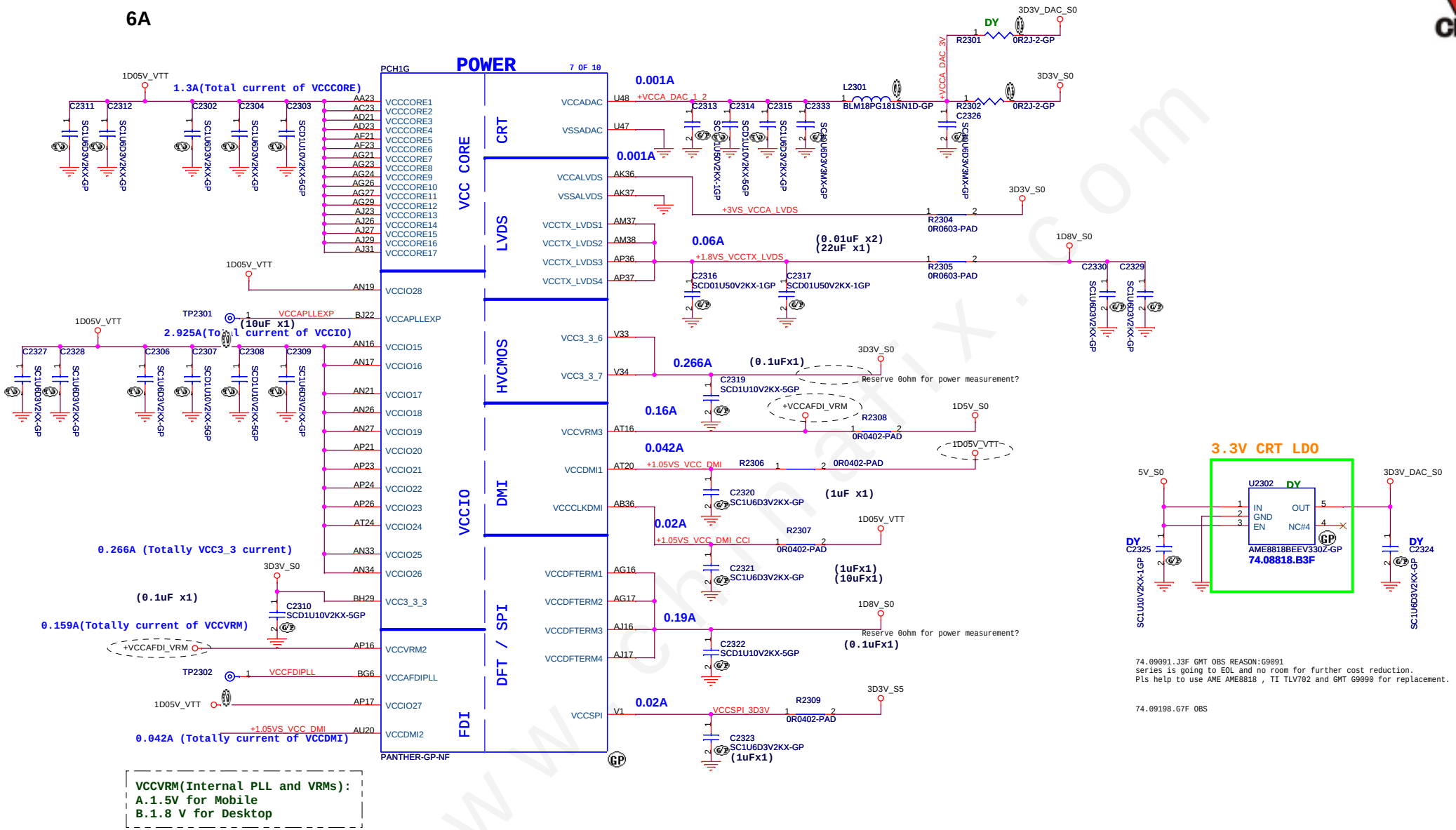

www.chinafix.com

<Core Design>

Wistron Corporation
21F, 88, Sec.1, Hsin Tai Wu Rd., Hsichih,
Taipei Hsien 221, Taiwan, R.O.C.

Title: PCH : POWER1

Size: A3 | Document Number: LA480 | Rev: SD

Date: Friday, January 06, 2012 | Sheet 23 of 103

SSID = PCH

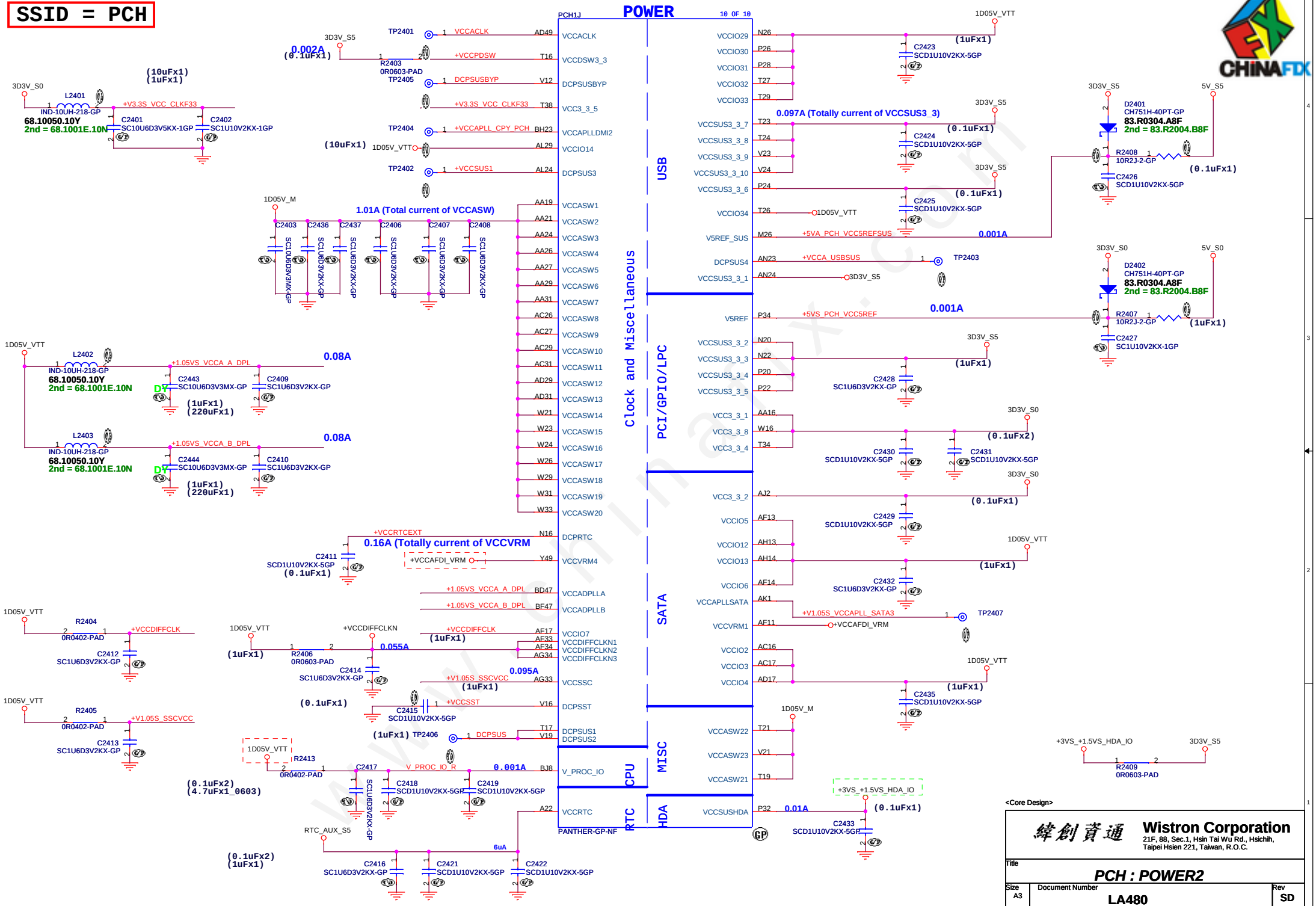

www.chinafdx.com

<Core Design>

緯創資通 **Wistron Corporation**
21F, 88, Sec.1, Hsin Tai Wu Rd., Hsichih,
Taipei Hsien 221, Taiwan, R.O.C.

Title: **PCH : POWER2**

Size	Document Number	Rev
A3	LA480	SD

Date: Friday, January 06, 2012 Sheet 24 of 103

SSID = PCH

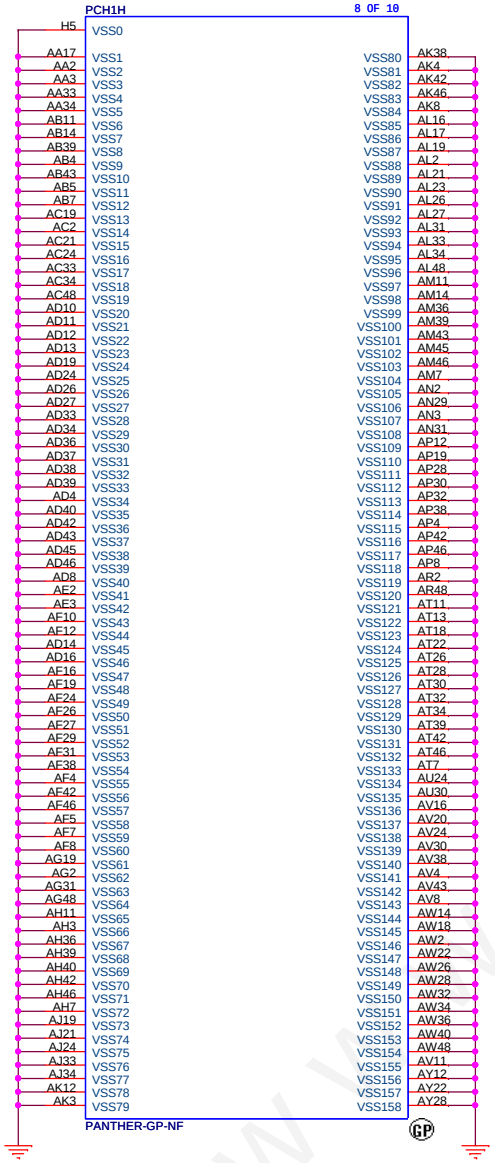

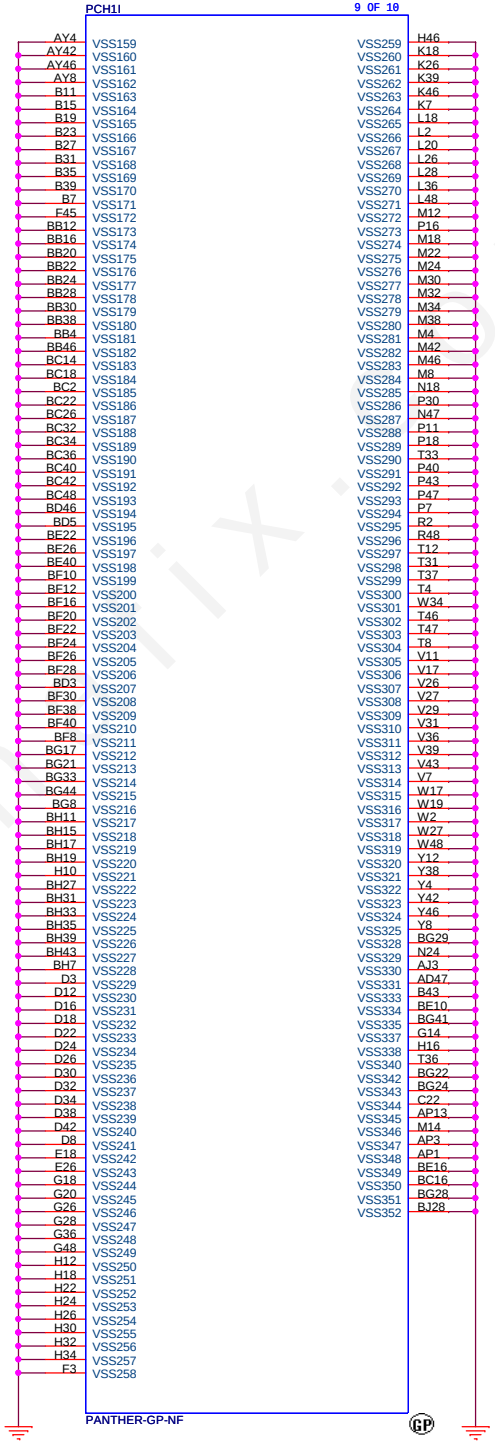

www.chinafix.com

<Core Design>

緯創資通 Wistron Corporation
21F, 88, Sec.1, Hsin Tai Wu Rd., Hsichih,
Taipei Hsien 221, Taiwan, R.O.C.

Title: **PCH : VSS**

Size	Document Number	Rev
A3	LA480	SD

Date: Friday, January 06, 2012 Sheet 25 of 103

BLANK

www.chinafix.com

<Core Design>

緯創資通 Wistron Corporation
21F, 88, Sec.1, Hsin Tai Wu Rd., Hsichih,
Taipei Hsien 221, Taiwan, R.O.C.

Title	***Reserved***	
Size A4	Document Number **LA480**	Rev **SD**
Date: Friday, January 06, 2012	Sheet 26 of 103	

SSID = KBC

65W: 1.7V
90W: 3.3V

Code change to Low Active on 8/19

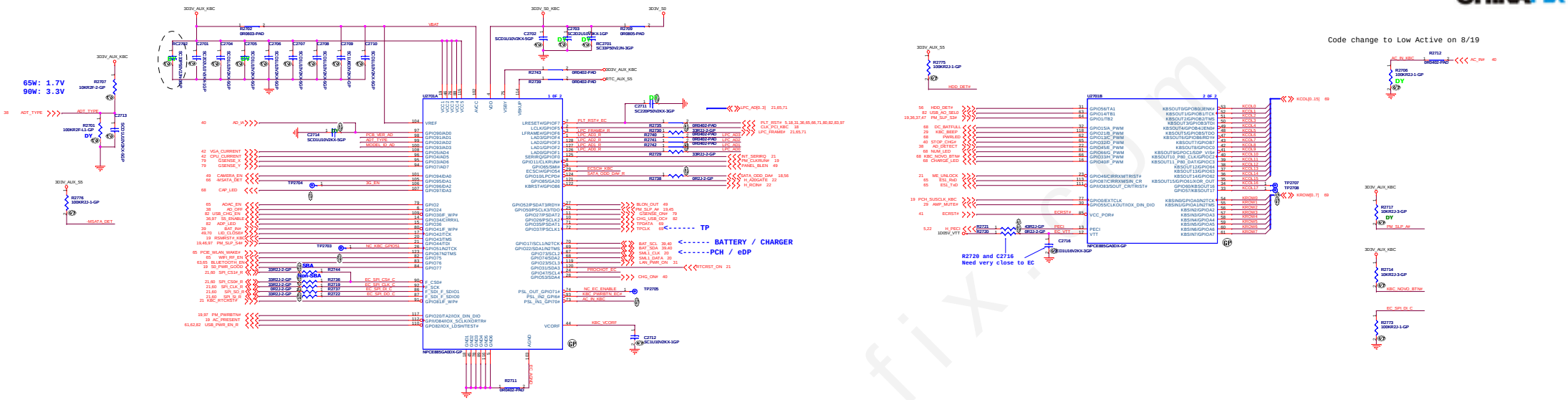

EC_GPIO47 High Active

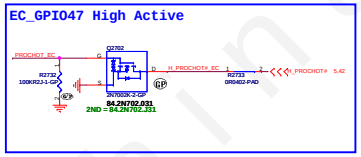

Reset IC: Prevent BIOS data loss solution

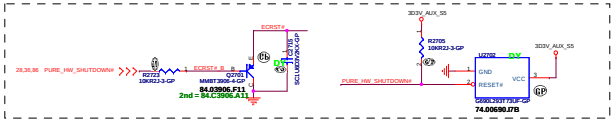

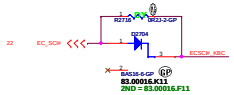

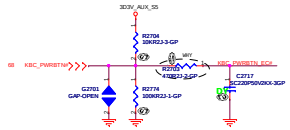

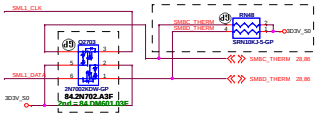

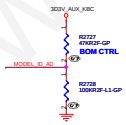

MODEL_ID_AD (Pin100)	Pull Down	Pull High	Voltage
UMA	100.0K	33.0K	2.481V
OPTIMUS	100.0K	47.0K	2.245V

EC GPIO standard PH/PL

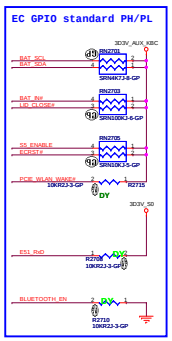

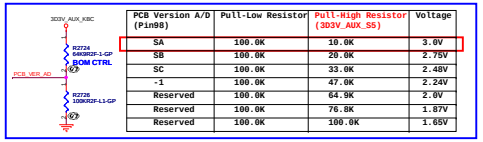

PCB Version A/D (Pin98)	Pull-Low Resistor	Pull-High Resistor (3D3V_AUX_S5)	Voltage
SA	100.0K	10.0K	3.0V
SB	100.0K	20.0K	2.75V
SC	100.0K	33.0K	2.48V
-1	100.0K	47.0K	2.24V
Reserved	100.0K	64.9K	2.0V
Reserved	100.0K	76.8K	1.87V
Reserved	100.0K	100.0K	1.65V

71.00885.A0G
IC EMB CTRL NPCE885PA0DX LQFP 128P

www.chinafix.com

<Core Design>
Wistron Corporation
21F,88,Sec.1,Hsin Tai Wu Rd.,Hsichih,
Taipei Hsien 221, Taiwan, R.O.C
Title: <Title>
Size: A1 | Document Number: LA480 | Rev: SD
Date: Friday, January 06, 2012 | Sheet 27 of 103

SSID = Thermal

Thermal sensor

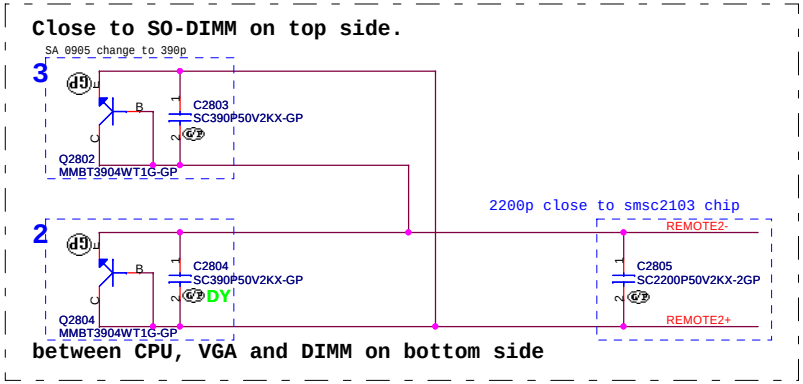

20110718_Carrey:
For Vendor suggestion, add 390pF Cap. as closed to pin B/C and E of Q2803

CPU TEMP:
H_THERMDA and H_THERMDC routing 10mil trace width and spacing. Locate Capacity near Thermal diode.

20110718_Carrey:
For Vendor suggestion, add 10k pull high to 3D3V_S0

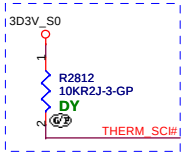

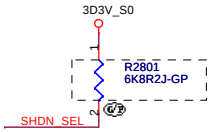

SHDN --> 2N3904 ON External diode

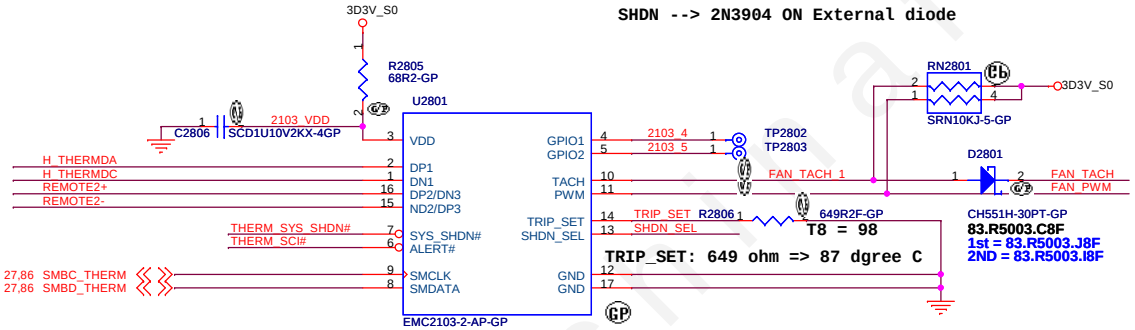

pin6, ALERT# OD
pin7, SYS_SHDN# OD

4 WIRE PWM Fan Control circuit

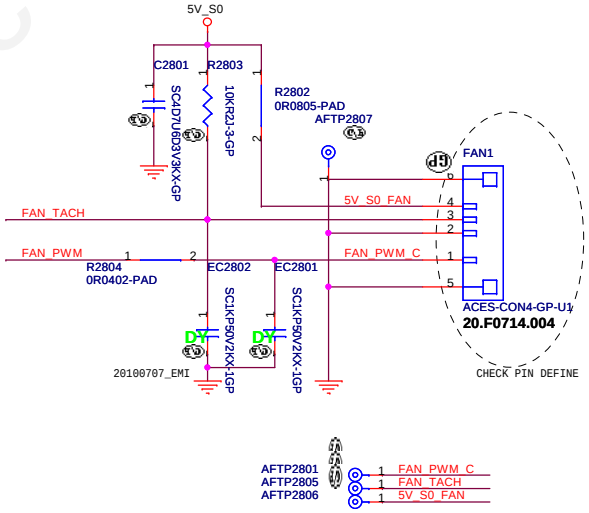

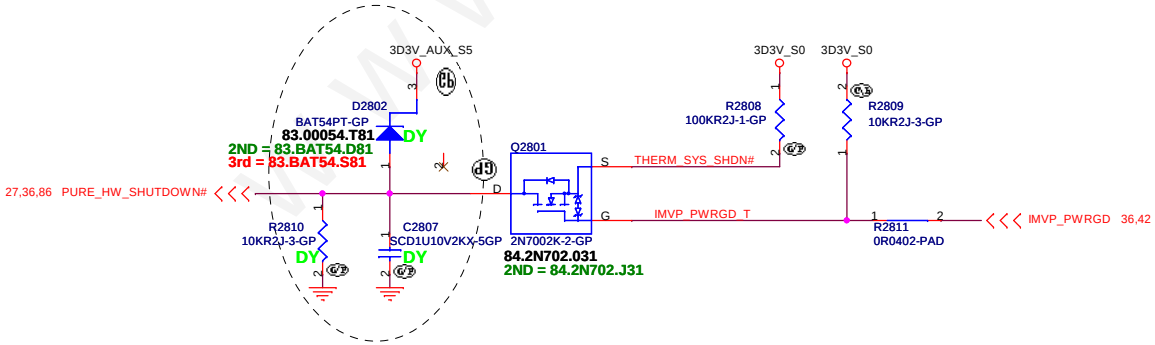

<Core Design>

Wistron Corporation
21F, 88, Sec.1, Hsin Tai Wu Rd., Hsichih,
Taipei Hsien 221, Taiwan, R.O.C.

Title: THERMAL SENSOR SMSC EMC2103

Size	Document Number	Rev
A3	LA480	SD

Date: Friday, January 06, 2012 Sheet 28 of 103

www.chinafix.com

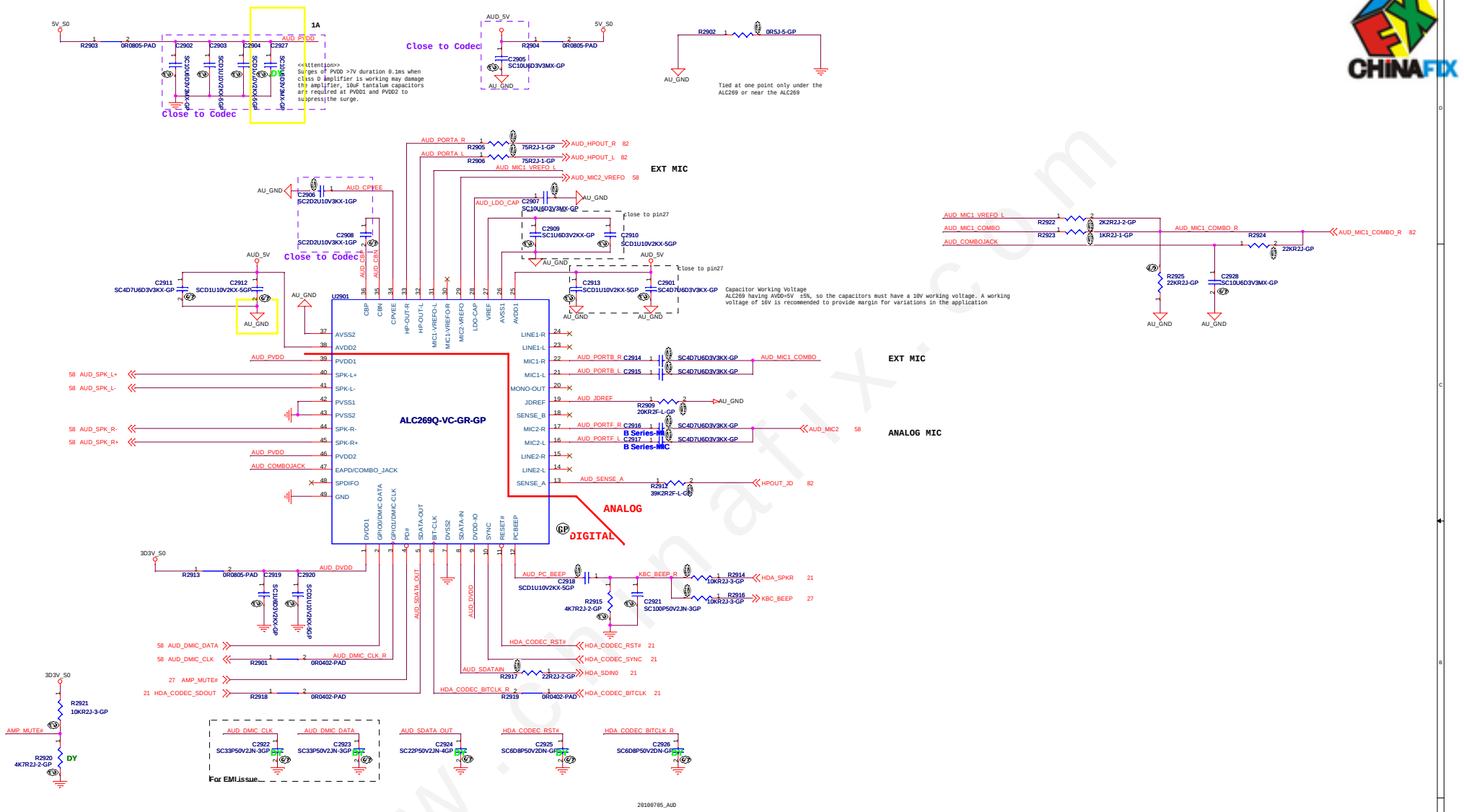

www.chinafix.com

<Core Design>

緯創資通 Wistron Corporation
21F, 88, Sec.1, Hsin Tai Wu Rd., Hsichih, Taipei Hsien 221, Taiwan, R.O.C.

Title: AUDIO CODEC

Size	Document Number	Rev
A2	LA480	SD

Date: Friday, January 06, 2012 Sheet 29 of 103

BLANK

www.chinafix.com

<Core Design>

緯創資通 Wistron Corporation
21F, 88, Sec.1, Hsin Tai Wu Rd., Hsichih,
Taipei Hsien 221, Taiwan, R.O.C.

Title	Reserved	
Size A4	Document Number LA480	Rev SD
Date: Friday, January 06, 2012	Sheet 30 of 103	

25MHz XTAL

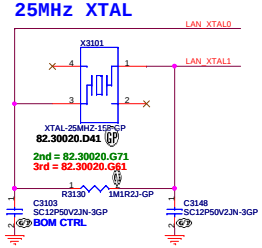

	C3103	C3148
VB480	15pF 78.15034.1FL	12pF
VB580	12pF 78.12034.1FL	12pF

71.08111.N03, IC PCIE CTRL RTL8111F-CGT QFN 48P

71.08111.J03, IC PCI-E RTL8111E-VL-CGT QFN 48P

8111F can use GPIO to inform system to do LAN PHY power down.

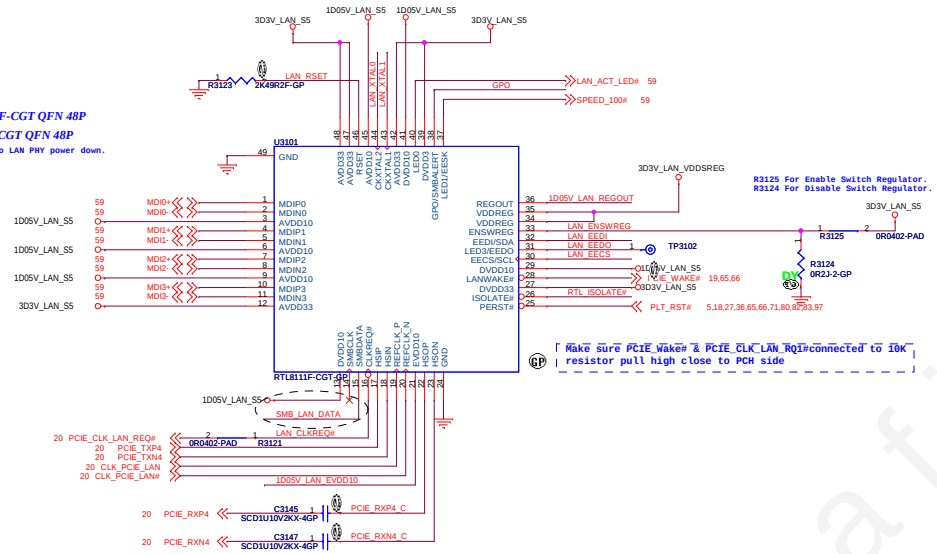

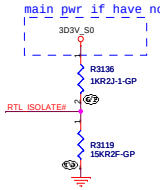

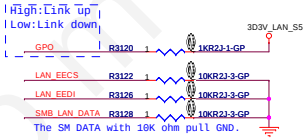

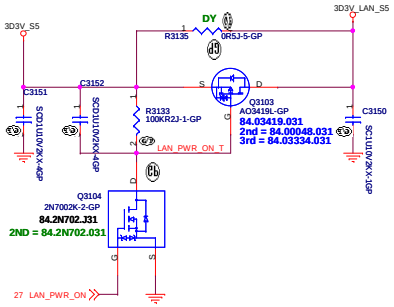

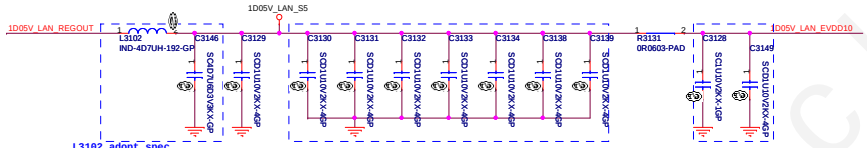

L3102 adopt spec.
C3104 change to 4.7uF X5R type capacitor

Layout Note: Close to U3101 pin C3130 ~ C3134,C3138,C3139 For VDD10 pins - 3, 6, 9, 13, 29, 41, 45.

Layout Note: C3128&C3149 Close to U3101 pin21

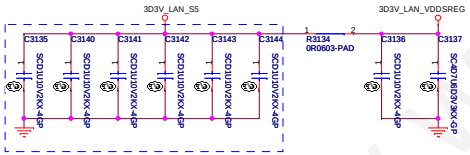

Layout Note: C3135, C3140~C3144 Close to U3101 pin For VDD33 pins - 12, 27, 39, 42, 47, 48.

www.chinafix.com

緯創資通 Wistron Corporation
21F, 88, Sec.1, Hsin Tai Wu Rd., Hsichih, Taipei Hsien 221, Taiwan, R.O.C.
Core Design

Title: LAN RTL8111F
Size: A2
Document Number: LA480
Rev: SD
Date: Friday, January 06, 2012
Sheet 31 of 103

www.chinafix.com

CHINAFIX

<Core Design>

緯創資通 Wistron Corporation
21F, 88, Sec.1, Hsin Tai Wu Rd., Hsichih,
Taipei Hsien 221, Taiwan, R.O.C.

Title: R5U220 (CARD READER)		
Size: A1	Document Number: LA480	Rev: SD
Date: Friday, January 05, 2007	Sheet 32 of 103	

BLANK

www.chinafix.com

<Core Design>

緯創資通 Wistron Corporation
21F, 88, Sec.1, Hsin Tai Wu Rd., Hsichih,
Taipei Hsien 221, Taiwan, R.O.C.

Title	***Reserved***	
Size A4	Document Number **LA480**	Rev **SD**
Date: Friday, January 06, 2012	Sheet 33 of 103	

BLANK

www.chinafix.com

<Core Design>

緯創資通 Wistron Corporation
21F, 88, Sec.1, Hsin Tai Wu Rd., Hsichih,
Taipei Hsien 221, Taiwan, R.O.C.

Title	***Reserved***	
Size A4	Document Number **LA480**	Rev **SD**
Date: Friday, January 06, 2012	Sheet 34 of 103	

BLANK

www.chinafix.com

<Core Design>

緯創資通 Wistron Corporation
21F, 88, Sec.1, Hsin Tai Wu Rd., Hsichih,
Taipei Hsien 221, Taiwan, R.O.C.

Title: USB 3.0 Controller

Size	Document Number	Rev
A4	LA480	SD

Date: Friday, January 06, 2012 Sheet 35 of 103

Power Sequence

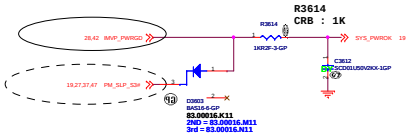

Run Power

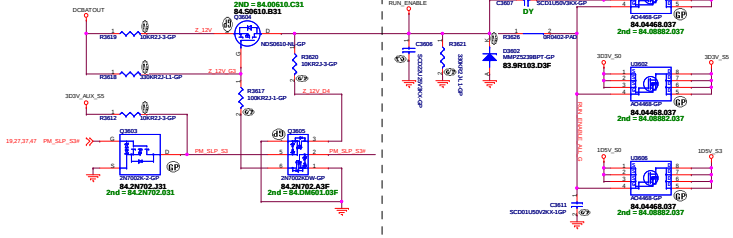

1D5V_S0

MAX Current 3000 mA
Design Current 2100 mA
Total= 11.39A

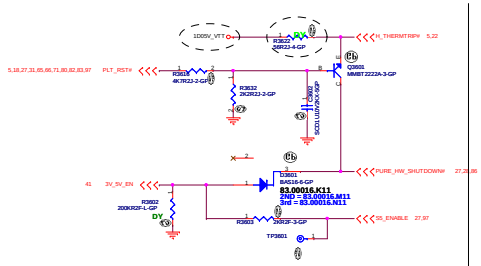

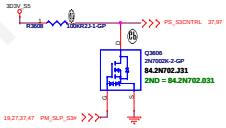

www.chinafix.com

<Core Design>
緯創資通 Wistron Corporation
2Fl., 88, Sec.1, Hsin Tai Wu Rd., Hsichih,
Taipei Hsien 221, Taiwan, R.O.C.
Title: Power Plane Enable
Size: A1 | Document Number: LA480 | Rev: SD
Date: Friday, January 08, 2010 | Sheet 36 of 103

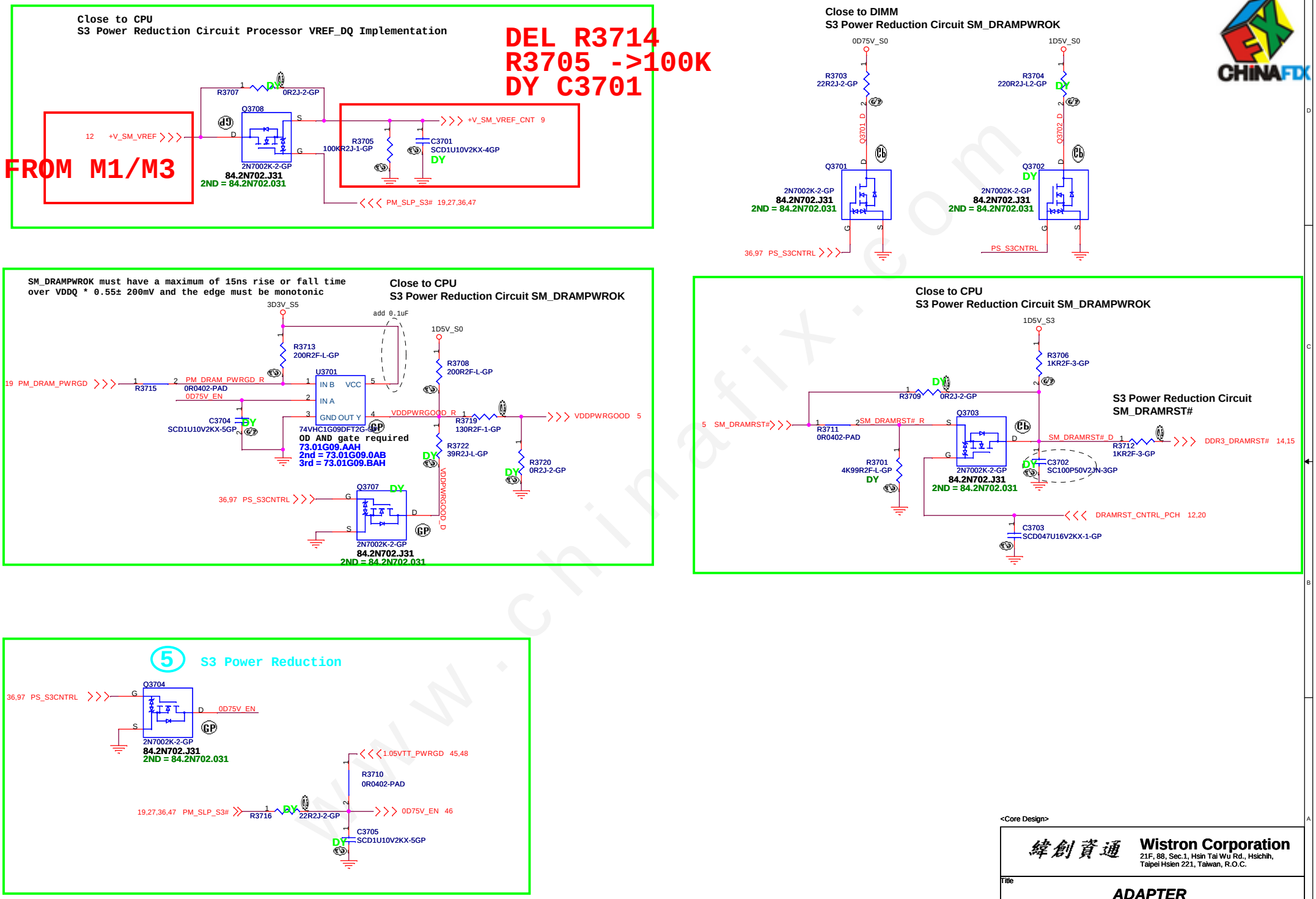

www.chinafix.com

<Core Design>

緯創資通 **Wistron Corporation**
21F, 88, Sec.1, Hsin Tai Wu Rd., Hsichih,
Taipei Hsien 221, Taiwan, R.O.C.

Title		
	ADAPTER	
Size A3	Document Number **LA480**	Rev **SD**
Date: Friday, January 06, 2012	Sheet 37 of 103	

Adaptor in to generate DCBATOUT

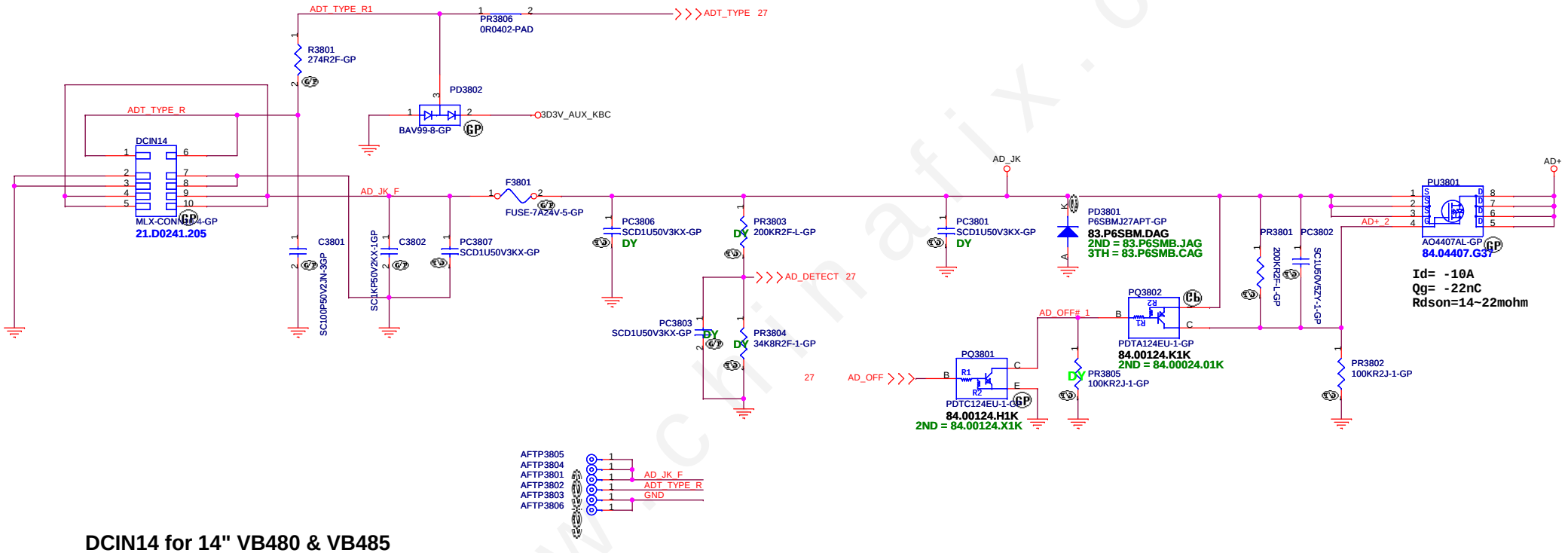

DCIN14 for 14" VB480 & VB485
DCIN15 for 15" VB580 & VB585

www.chinafix.com

<Core Design>

緯創資通 **Wistron Corporation**
21F, 88, Sec.1, Hsin Tai Wu Rd., Hsichih,
Taipei Hsien 221, Taiwan, R.O.C.

Title	DCIN_JACK	
Size A3	Document Number LA480	Rev SD
Date: Friday, January 06, 2012	Sheet 38 of 103	

BATTERY CONNECTOR

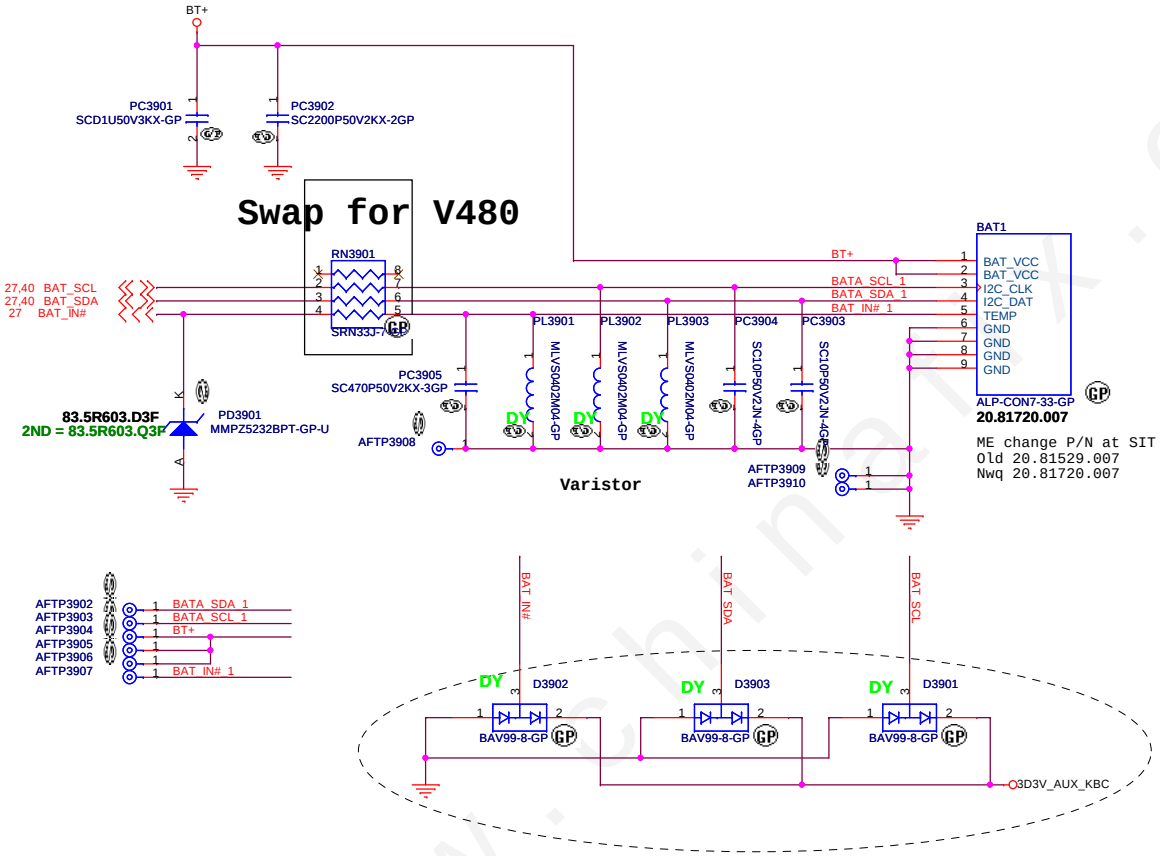

DY on LAB stage

www.chinafix.com

<Core Design>

緯創資通 **Wistron Corporation**
21F, 88, Sec.1, Hsin Tai Wu Rd., Hsichih,
Taipei Hsien 221, Taiwan, R.O.C.

Title	BATT_CONN	
Size	Document Number: LA480	Rev: SD
Date: Friday, January 06, 2012	Sheet 39 of 103	

SSID = Charger

A8(ANNIE/ASTRO)
PR4007,PR4008

AD+ total power	R1	R2
65w	12.4K 64.12425.6DL	100K
80w	41.2k	100K
90w	60.4k 64.60425.6DL	100K
120w	118k	100K

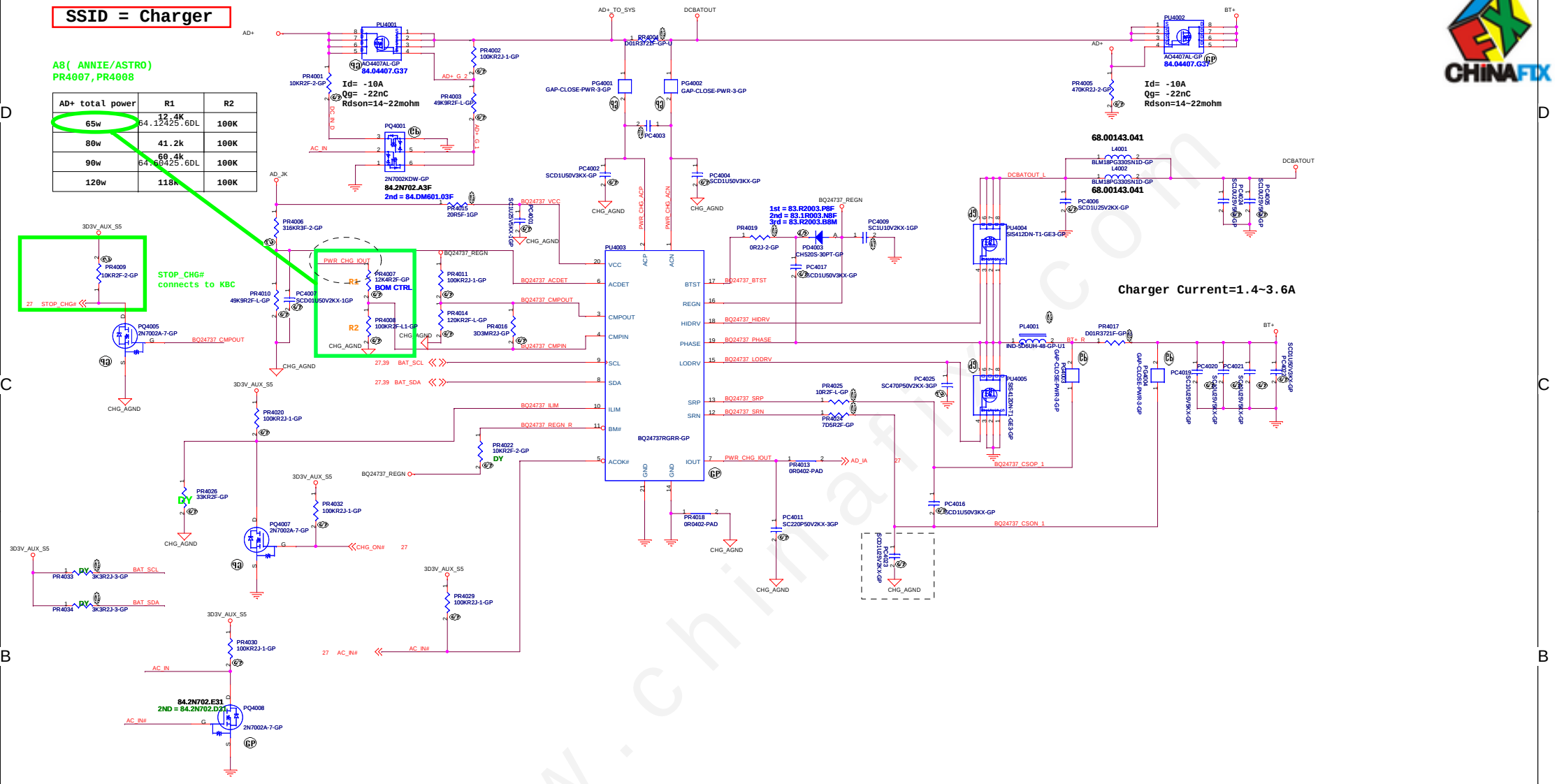

www.chinafix.com

SSID = PWR.Plane.Regulator_5v3p3v

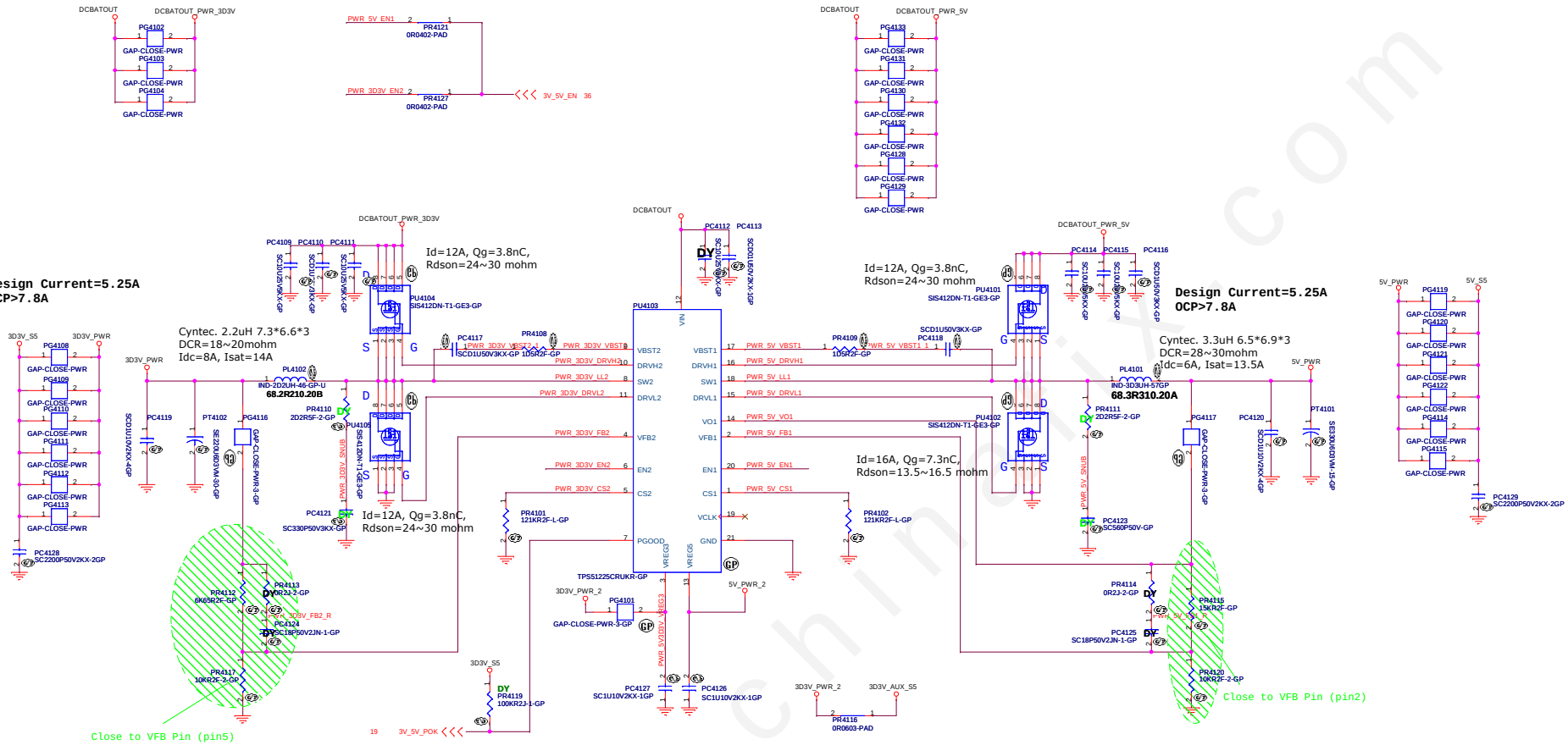

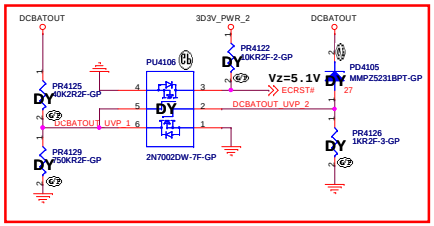

www.chinafix.com

<Core Design>
緯創資通 Wistron Corporation
21F, 88, Sec.1, Hsin Tai Wu Rd., Hsichih,
Taipei Hsien 221, Taiwan, R.O.C.

Title: TPS51123_5V_3D3V

Size	Document Number	Rev
		SD

Date: Friday, January 06, 2012 Sheet 41 of 103

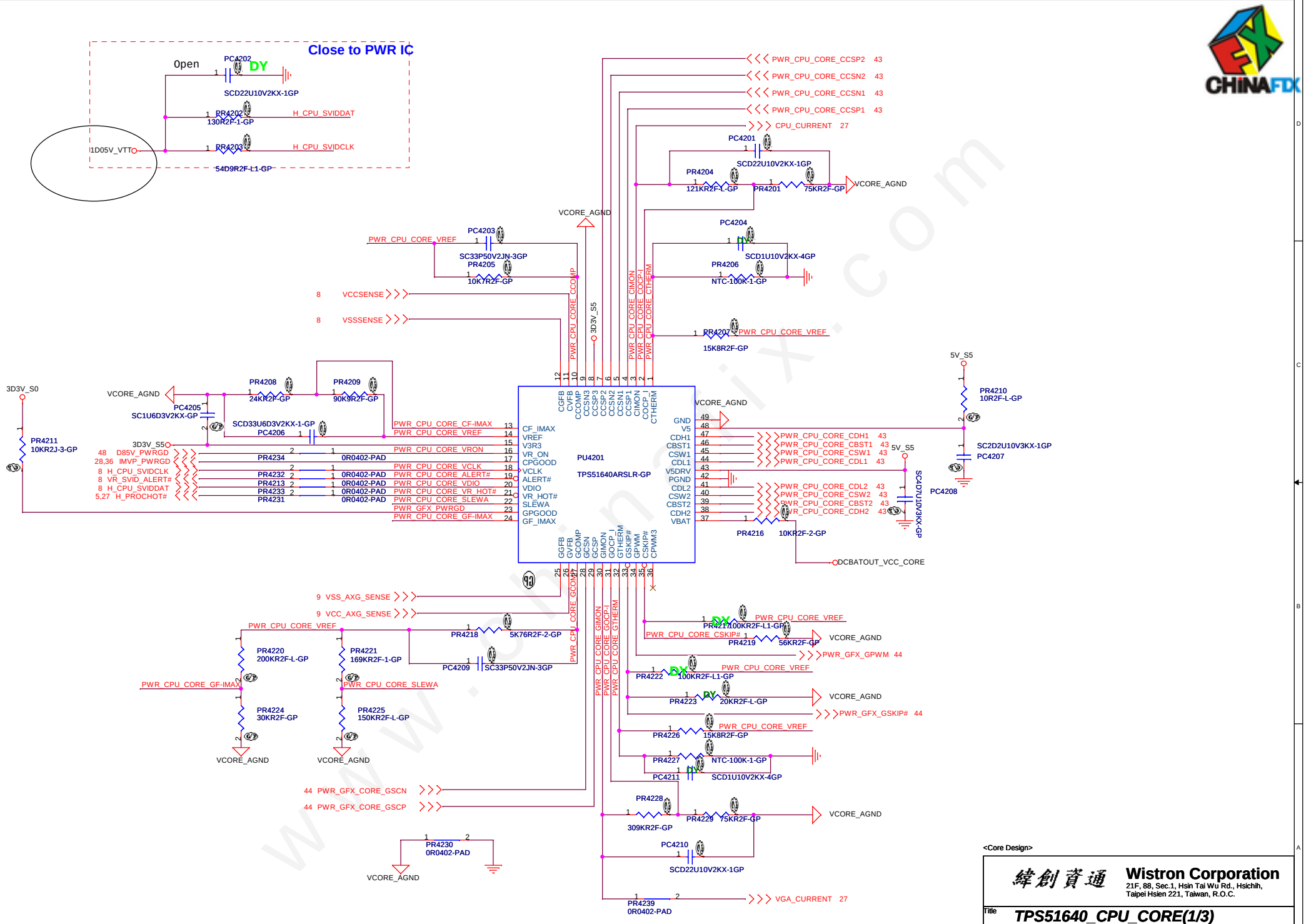

www.chinafix.com

<Core Design>

緯創資通 **Wistron Corporation**
21F, 88, Sec.1, Hsin Tai Wu Rd., Hsichih,
Taipei Hsien 221, Taiwan, R.O.C.

Title	TPS51640_CPU_CORE(1/3)	
Size	Document Number <Doc>	Rev SD
Date: Friday, January 06, 2012	Sheet 42 of 103	

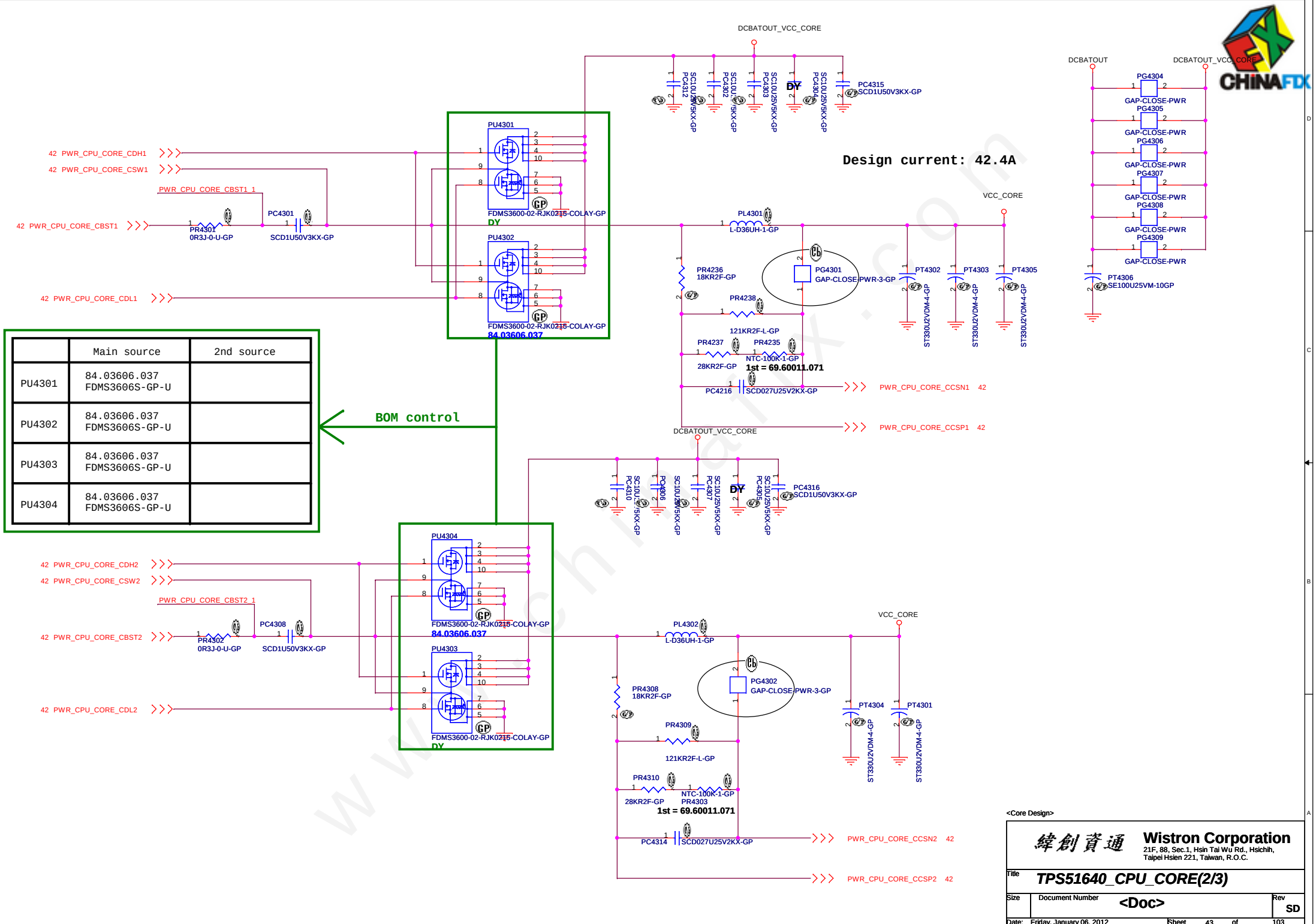

	Main source	2nd source
PU4301	84.03606.037 FDMS3606S-GP-U	
PU4302	84.03606.037 FDMS3606S-GP-U	
PU4303	84.03606.037 FDMS3606S-GP-U	
PU4304	84.03606.037 FDMS3606S-GP-U	

www.chinafix.com

	Main source	2nd source
PU4402	84.07608.037 FDMS7608S-GP	
PU4403	84.07608.037 FDMS7608S-GP	

BOM control

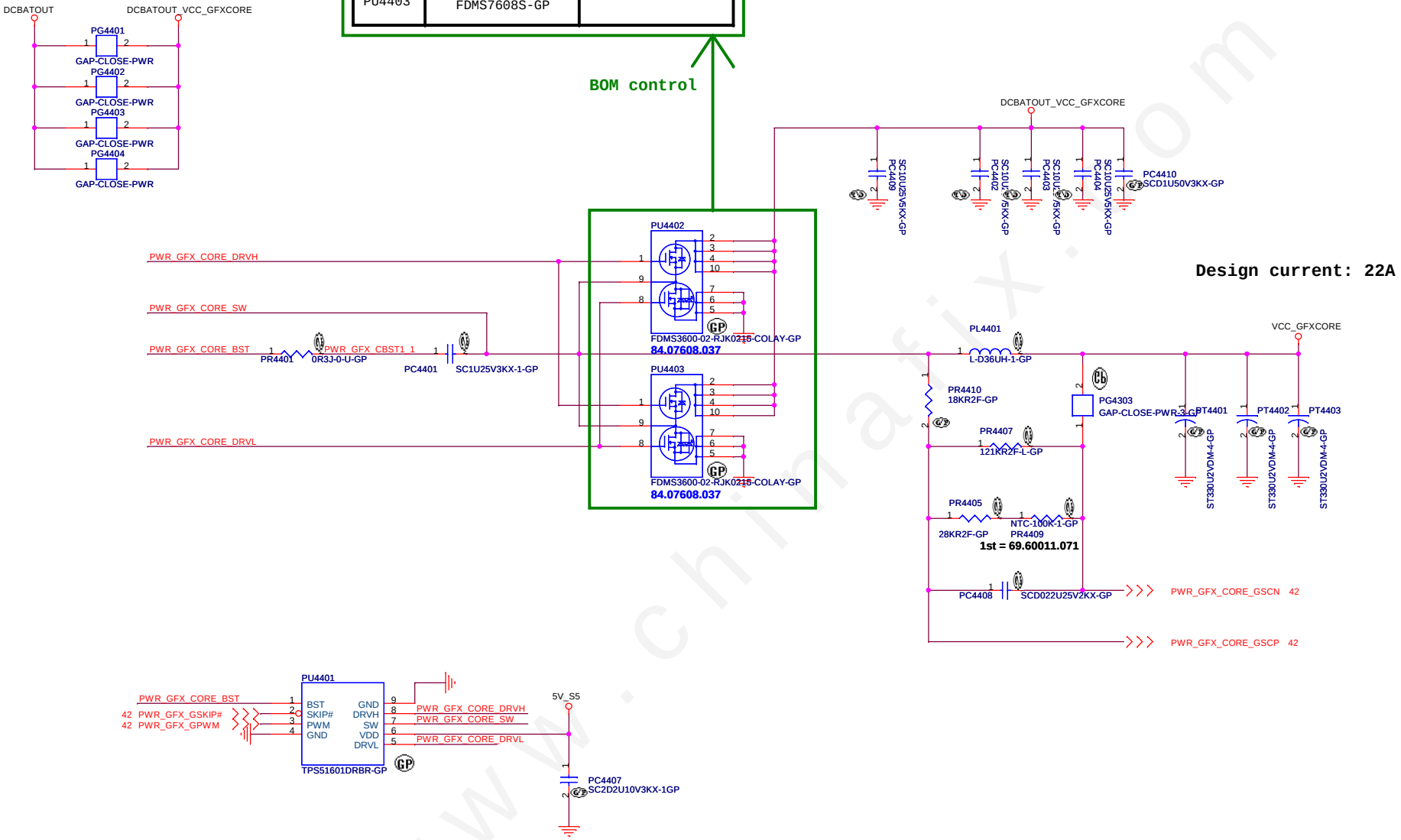

www.chinafix.com

<Core Design>

緯創資通 **Wistron Corporation**
21F, 88, Sec.1, Hsin Tai Wu Rd., Hsichih,
Taipei Hsien 221, Taiwan, R.O.C.

Title: *TPS51640_CPU_CORE(3/3)*

Size | Document Number: <Doc> | Rev: SD

Date: Friday, January 06, 2012 | Sheet 44 of 103

TPS51219 for 1D05V

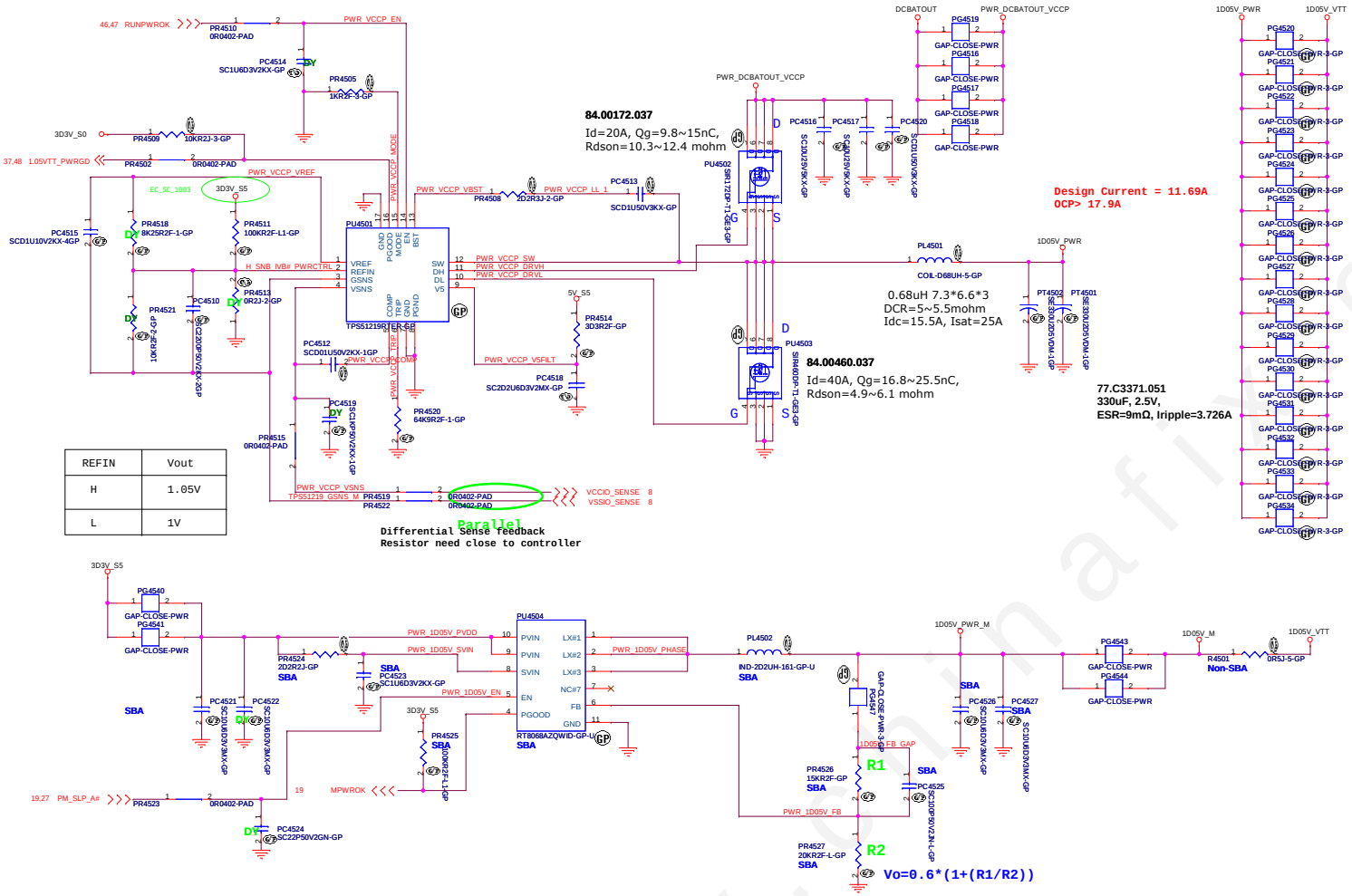

REFIN	Vout
H	1.05V
L	1V

www.chinafix.com

<Core Design>

Wistron Corporation
21F, 88, Sec.1, Hsin Tai Wu Rd., Hsichih,
Taipei Hsien 221, Taiwan, R.O.C.

Title: TPS51211_1D05V

Size | Document Number | Rev: SD

Date: Friday, January 06, 2012 | Sheet 45 of 103

SSID = PWR.Plane.Regulator_1p5v0p75v

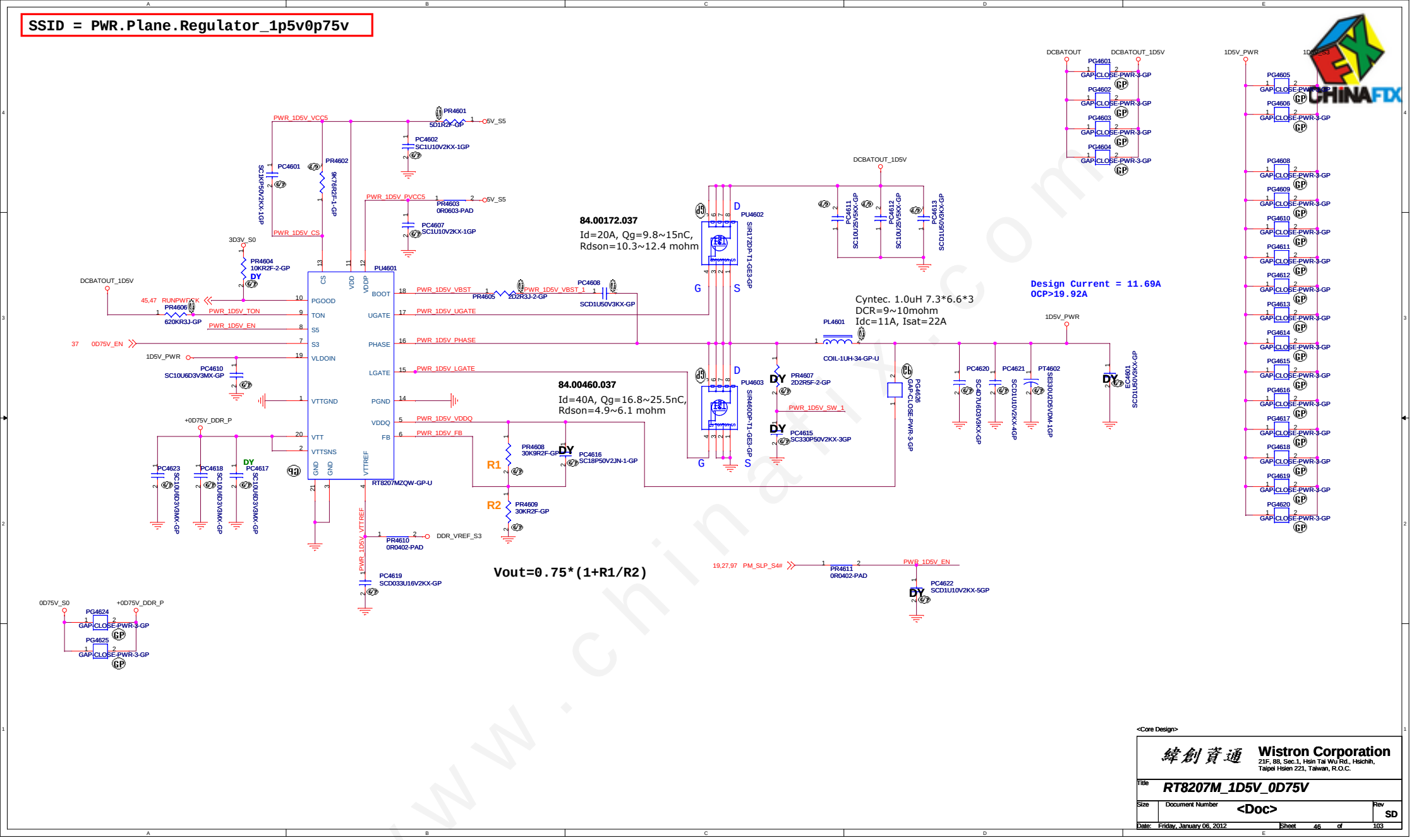

<Core Design>

Wistron Corporation
21F, 88, Sec.1, Hsin Tai Wu Rd., Hsichih,
Taipei Hsien 221, Taiwan, R.O.C.

Title: RT8207M_1D5V_0D75V

Size | Document Number: <Doc> | Rev: SD

Date: Friday, January 06, 2012 | Sheet 46 of 103

www.chinafix.com

SSID = PWR.Plane.Regulator_1p8v

RT8068A for 1D8V_S0

Design Current=1.1A

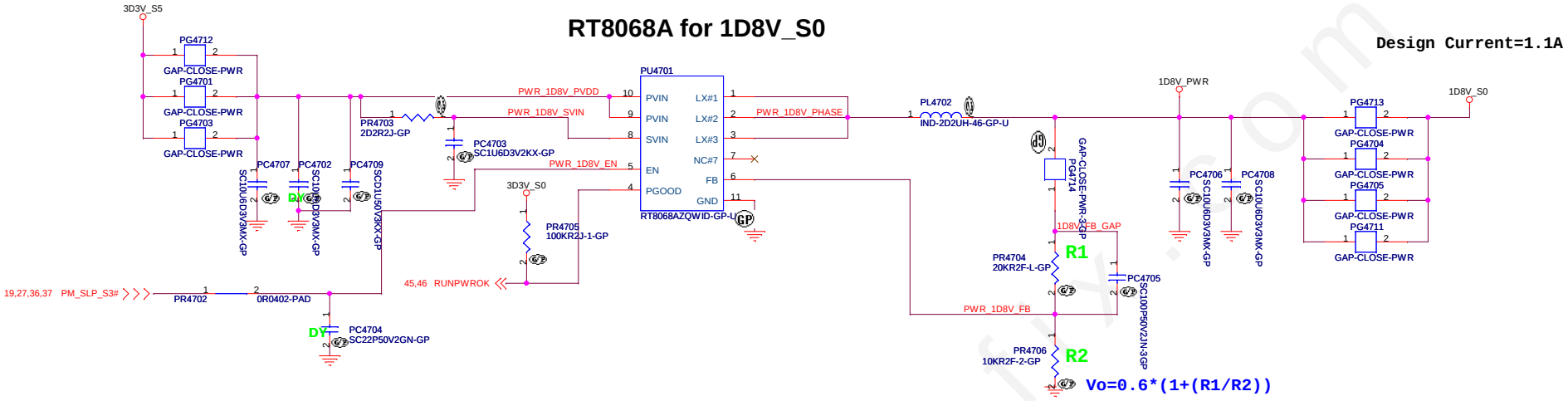

www.chinafix.com

<Core Design>

緯創資通	**Wistron Corporation** 21F, 88, Sec.1, Hsin Tai Wu Rd., Hsichih, Taipei Hsien 221, Taiwan, R.O.C.
Title	***PWM_1D8V_RT8015B***
Size / Document Number	Rev **SD**
Date: Friday, January 06, 2012	Sheet 47 of 103

TPS51461 for VCCSA

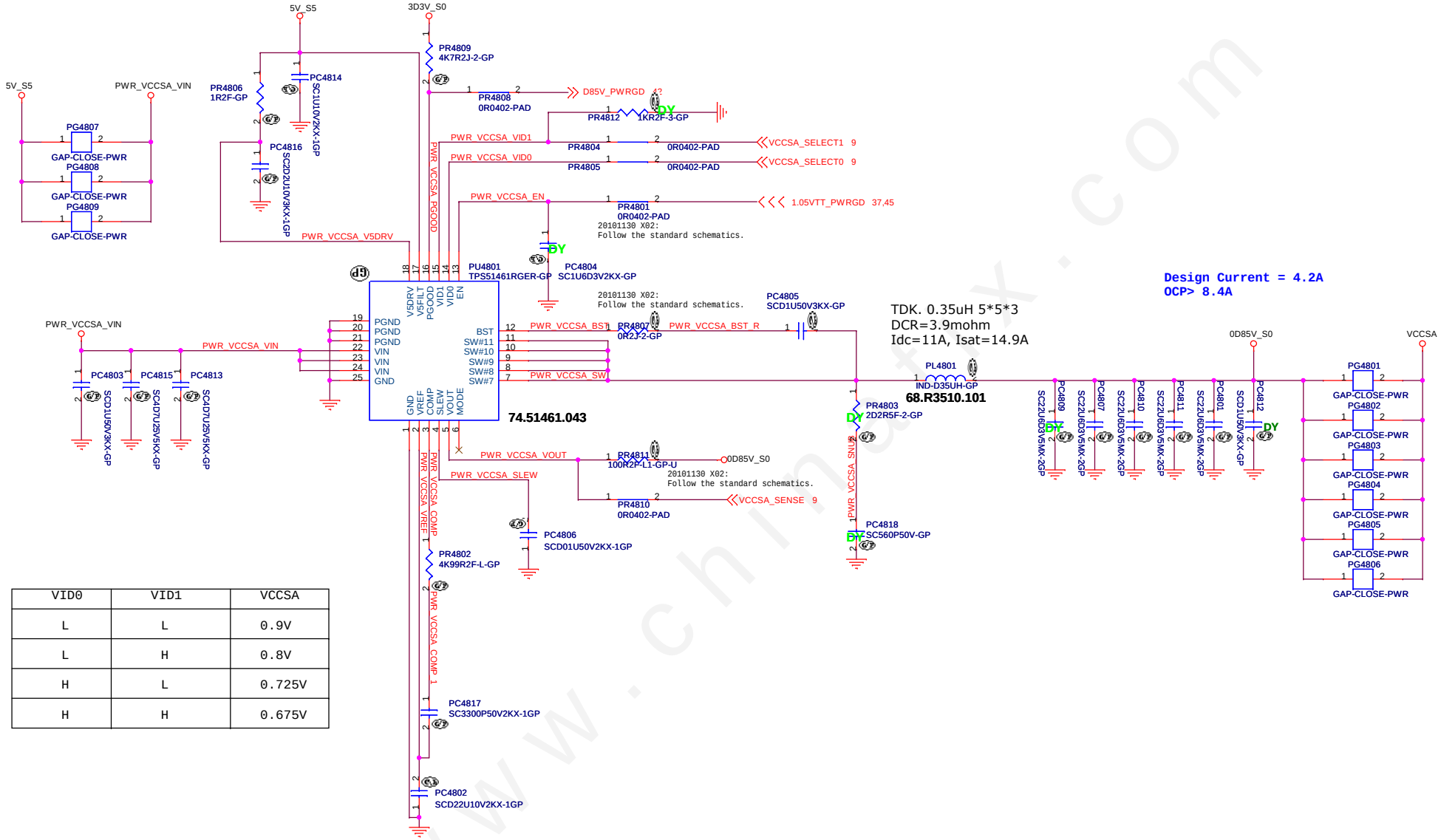

VID0	VID1	VCCSA
L	L	0.9V
L	H	0.8V
H	L	0.725V
H	H	0.675V

www.chinafdx.com

<Core Design>

緯創資通 Wistron Corporation
21F, 88, Sec.1, Hsin Tai Wu Rd., Hsichih,
Taipei Hsien 221, Taiwan, R.O.C.

Title: VCCSA_TPS51461

Size | Document Number: <Doc> | Rev: SD

Date: Friday, January 06, 2012 | Sheet 48 of 103

SSID = VIDEO

LVDS connector

LCD / Inverter Connector

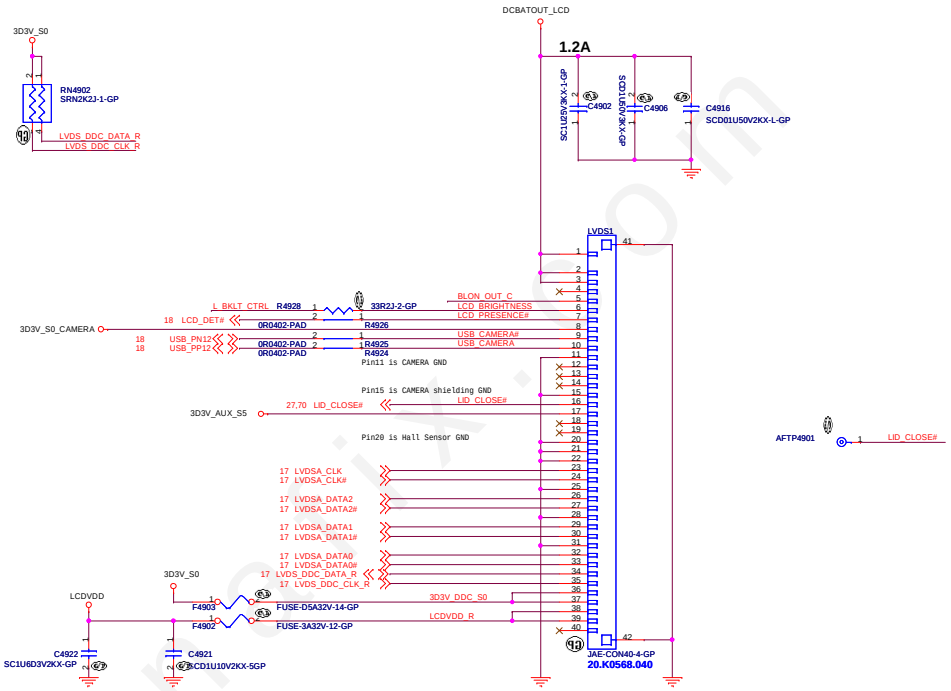

CAMERA POWER

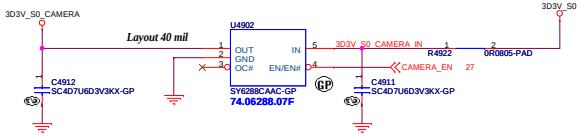

SILERGY	74.06288.07F	SY6288CAAC	High Active
DIODES	74.02171.07F	AP2171WG-7	High Active
UPI	74.07534.A7F	OBS	High Active
GMT	74.05240.A7F	OBS	High Active

LCD POWER

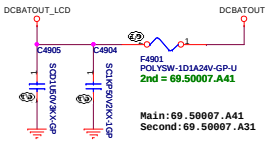

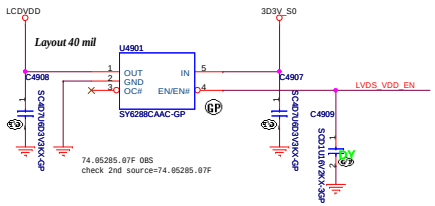

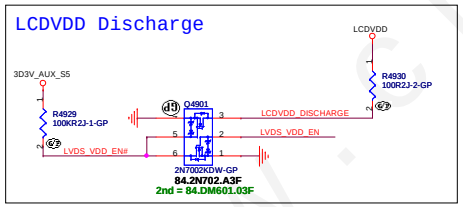

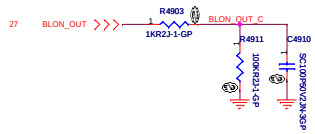

For EMI request
Close to LVDS connector

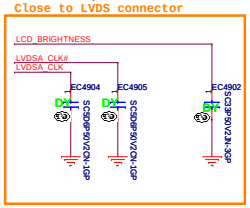

Panel BL brightness/Power En/BL En

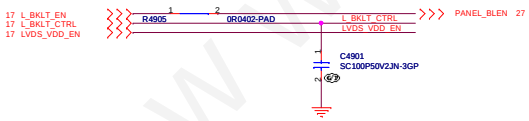

www.chinafix.com

<Core Design>
緯創資通 Wistron Corporation
21F, 88, Sec.1, Hsin Tai Wu Rd., Hsichih, Taipei Hsien 221, Taiwan, R.O.C.
Title: LCD Connector
Size: A2
Document Number: LA480
Rev: SD
Date: Friday, January 06, 2012
Sheet 49 of 103

CRT connector

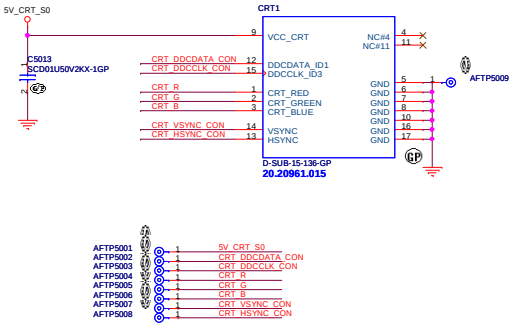

CRT DDCDATA & DDCCLK level shift

Pull High 5V Design on CRT Board

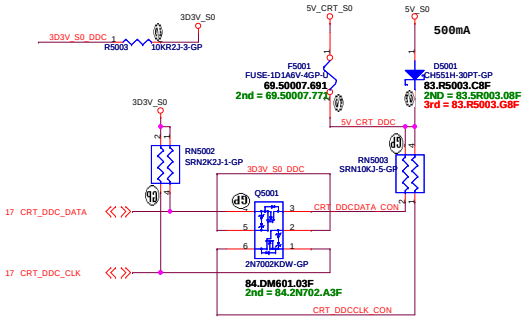

CRT Hsync & Vsync level shift

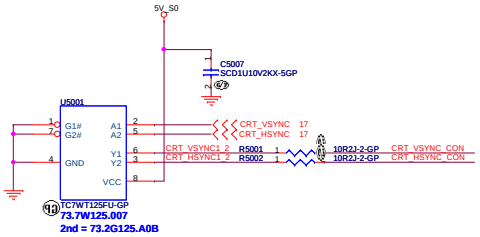

CRT RGB

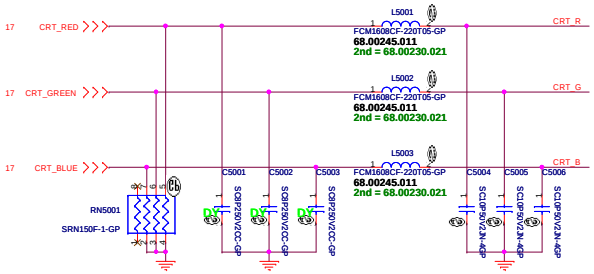

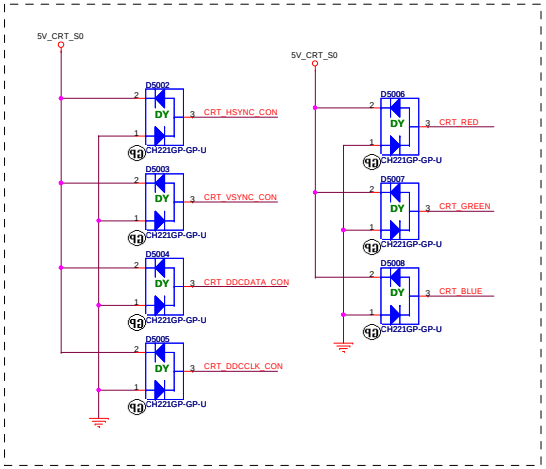

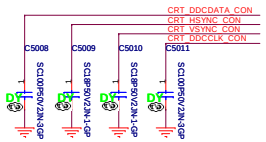

www.chinafix.com

<Core Design>

緯創資通 Wistron Corporation
21F, 88, Sec.1, Hsin Tai Wu Rd., Hsichih,
Taipei Hsien 221, Taiwan, R.O.C.

Title: CRT Connector
Size: A2
Document Number: LA480
Rev: SD
Date: Friday, January 06, 2012
Sheet 50 of 103

SSID = VIDEO

HDMI Passive Level Shifter

Close to HDMI Connector

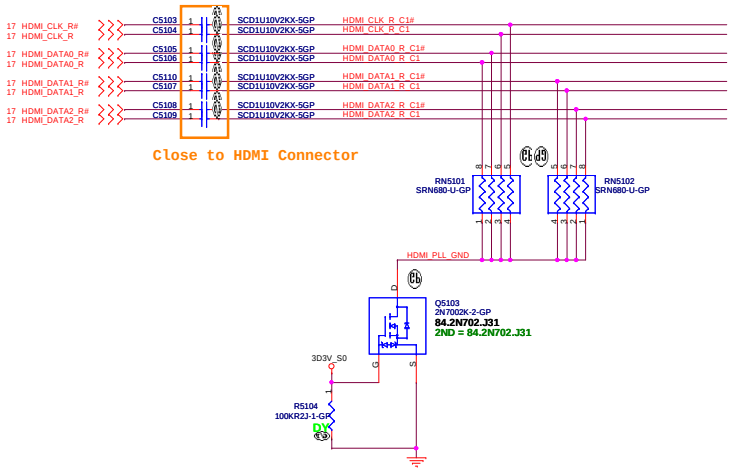

HDMI CONNECTOR

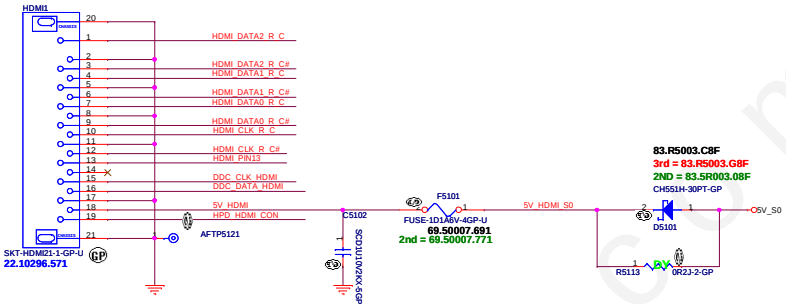

EMI's request

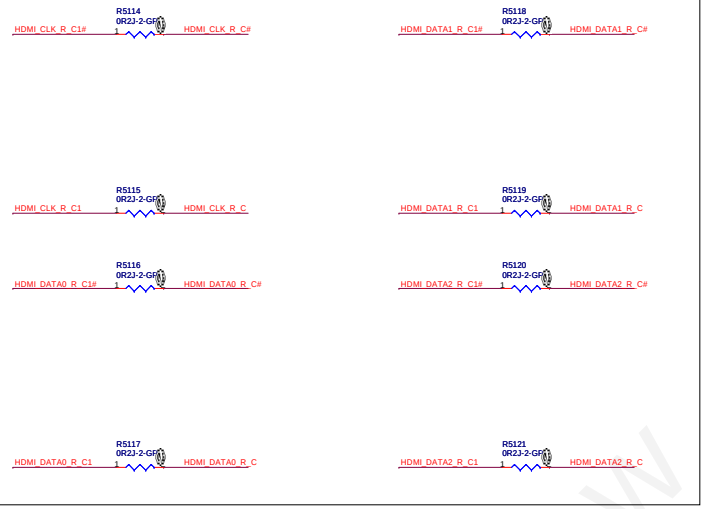

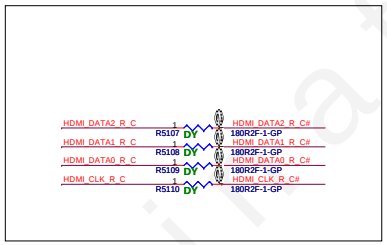

ESD Request

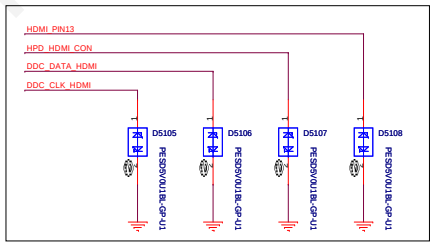

HDMI DDC Passive Level Shifter

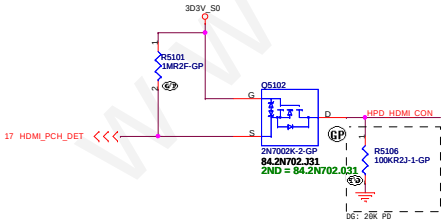

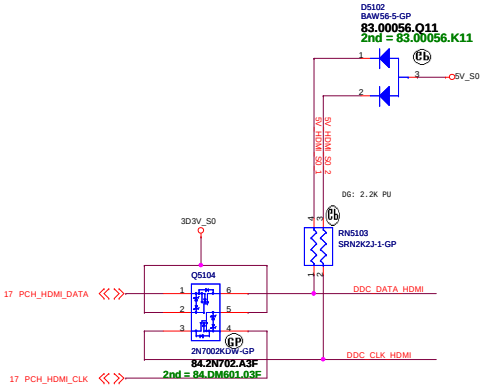

www.chinafix.com

<Core Design>

緯創資通 Wistron Corporation
21F, 88, Sec.1, Hsin Tai Wu Rd., Hsichih, Taipei Hsien 221, Taiwan, R.O.C.

Title: HDMI Level Shifter/Connector

Size: A2 | Document Number: LA480 | Rev: SD

Date: Friday, January 06, 2012 | Sheet 51 of 103

BLANK

www.chinafix.com

<Core Design>

緯創資通 Wistron Corporation
21F, 88, Sec.1, Hsin Tai Wu Rd., Hsichih,
Taipei Hsien 221, Taiwan, R.O.C.

Title	eDP	
Size A4	Document Number LA480	Rev SD
Date: Friday, January 06, 2012	Sheet 52 of 103	

BLANK

www.chinafix.com

<Core Design>

緯創資通 Wistron Corporation
21F, 88, Sec.1, Hsin Tai Wu Rd., Hsichih,
Taipei Hsien 221, Taiwan, R.O.C.

Title	S-VIDEO	
Size A4	Document Number LA480	Rev SD
Date: Friday, January 06, 2012	Sheet 53 of 103	

BLANK

www.chinafix.com

<Core Design>

緯創資通 Wistron Corporation
21F, 88, Sec.1, Hsin Tai Wu Rd., Hsichih,
Taipei Hsien 221, Taiwan, R.O.C.

Title	***Reserved***	
Size A4	Document Number **LA480**	Rev **SD**
Date: Friday, January 06, 2012	Sheet 54 of 103	

SSID = User.Interface

ITP Connector

H_CPURST# use pull-up Resistor close
ITP connector 500 mil (max),
others place near CPU side.

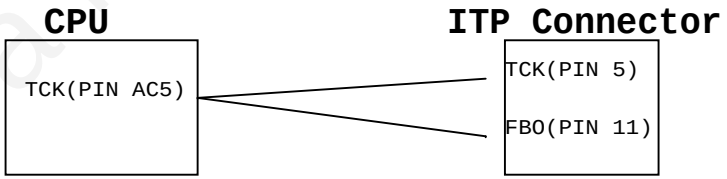

www.chinafix.com

<Core Design>

緯創資通 Wistron Corporation
21F, 88, Sec.1, Hsin Tai Wu Rd., Hsichih,
Taipei Hsien 221, Taiwan, R.O.C.

Title	ITP	
Size A4	Document Number LA480	Rev SD
Date: Friday, January 06, 2012	Sheet 55 of 103	

SATA HDD Connector

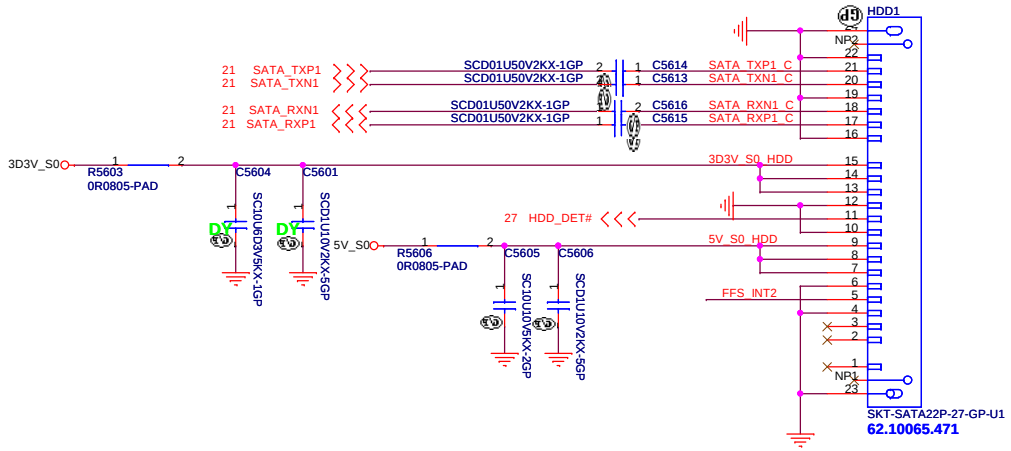

ODD Connector

SATA_RX- and SATA_RX+ Trace Length match within 20 mil

Mars:
Exchange ODD and ESATA differential pair each other.

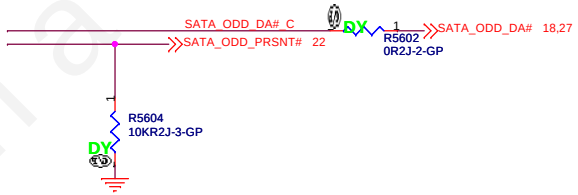

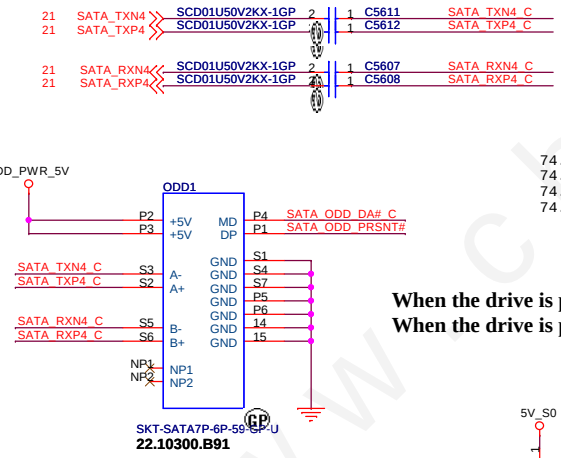

74.02069.079 TI TPS2069DGNR MSOP 8P
74.07534.D79 UPI UP7534PRA8-15 MSOP 8P
74.00547.C79 GMT G547F1P81U MSOP 8P (OBS)
74.07534.A79 UPI UP7534ARA8-15 MSOP8P

SATA Zero Power ODD

Current limit
Active High
typ =>2A

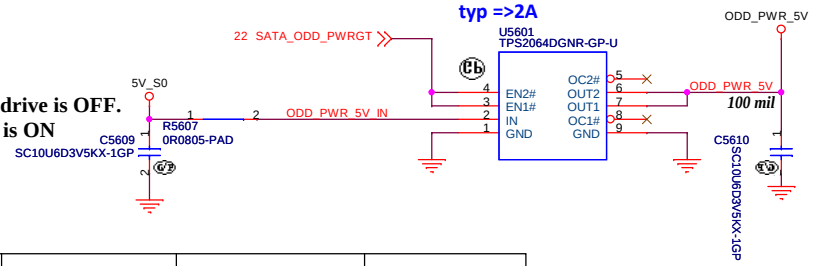

When the drive is powered on, the FET to the MD/DA pin drive is OFF.
When the drive is powered off, the FET to the MD/DA pin is ON

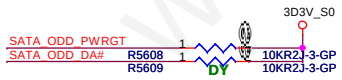

SUPPORT ZERO SATA ODD

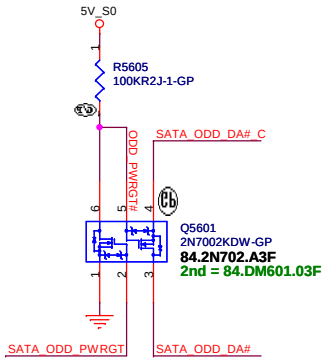

TI	74.02069.079	TPS2069DGNR	High Active
DIODES		AP2171WG-7	High Active
UPI	74.07534.A7F	OBS	High Active

<Core Design>

Wistron Corporation
21F, 88, Sec.1, Hsin Tai Wu Rd., Hsichih, Taipei Hsien 221, Taiwan, R.O.C.

Title: HDD/ODD
Size: A3 | Document Number: LA480 | Rev: SD
Date: Friday, January 06, 2012 | Sheet 56 of 103

www.chinafix.com

BLANK

www.chinafix.com

<Core Design>

緯創資通 Wistron Corporation
21F, 88, Sec.1, Hsin Tai Wu Rd., Hsichih,
Taipei Hsien 221, Taiwan, R.O.C.

Title	E-SATA+USB	
Size A4	Document Number LA480	Rev SD
Date: Friday, January 06, 2012	Sheet 57 of 103	

Int. Digital MIC for V series

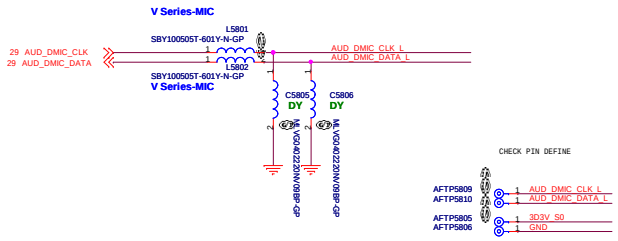

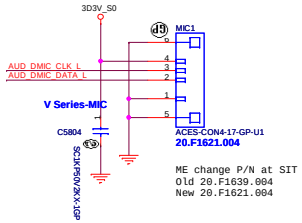

ME change P/N at SIT
Old 20.F1639.004
New 20.F1621.004

Int. Mono Analog MIC for B series

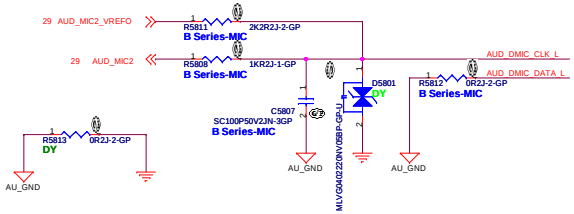

INTERNAL STEREO SPEAKERS

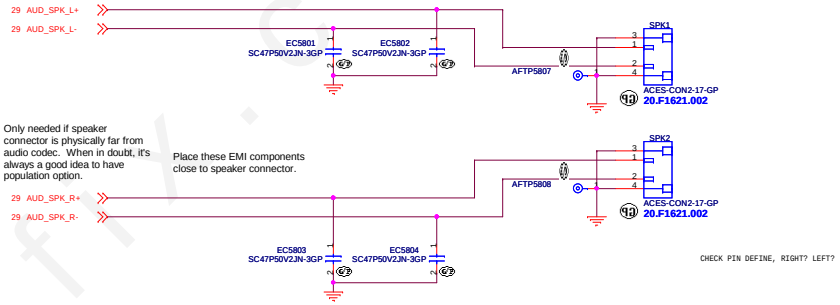

Only needed if speaker connector is physically far from audio codec. When in doubt, it's always a good idea to have population option.

Place these EMI components close to speaker connector.

CHECK PIN DEFINE, RIGHT? LEFT?

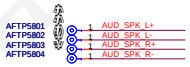

Table 58.1 - Bi-direction ESD multi-source

Supplier	Description	Lenovo P/N	Wistron P/N
ROHM	RSB5.6SMT2R	N/A	83.RSB56.BAF
ON SEMI	ESD5B5.0ST1G	N/A	83.ESD5B.0AF
NXP	PESD5V0S1BB	N/A	83.0005V.0AF

www.chinafix.com

FOR CO-LAY

GIGA Lan Transformer

TVS
83.00005.BAE
DIODE ARR SRV05-4.TCT SOT23-6

83.09904.AAE
DIODE ESD AZC099-04S SOT23-6L

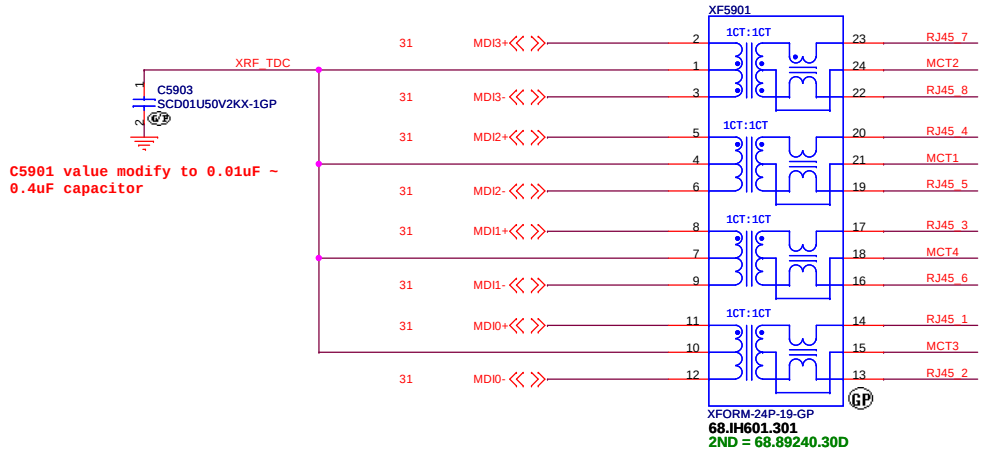

1st
68.IH601.301(Taimag) for 1000
68.HH035.301(Taimag) for 10/100
2nd
68.2413S.30A(Lankom) for 1000
68.H6441.301(Lankom) for 10/100

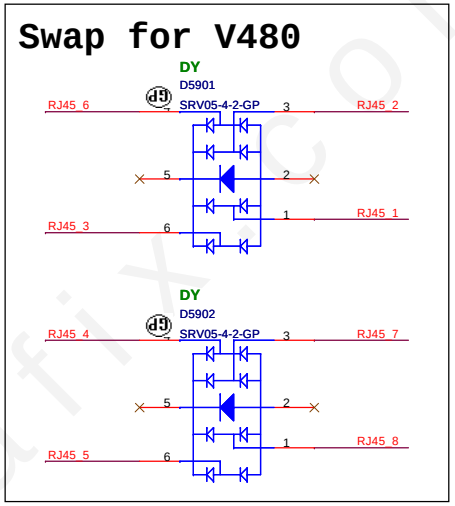

LAN Connector

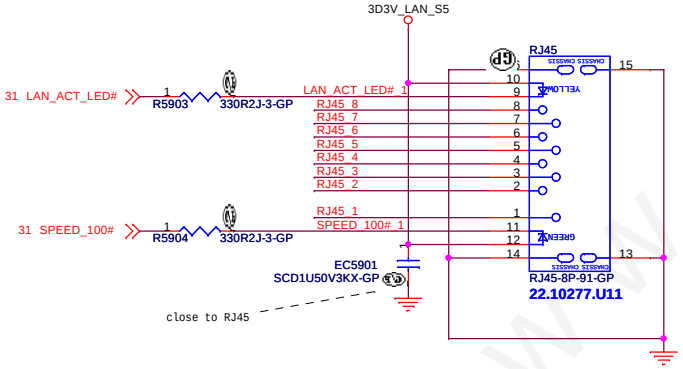

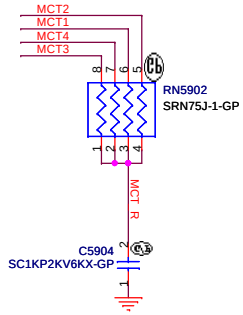

www.chinafix.com

<Core Design>

緯創資通 Wistron Corporation
21F, 88, Sec.1, Hsin Tai Wu Rd., Hsichih,
Taipei Hsien 221, Taiwan, R.O.C.

Title: RJ45 / Transformer

Size	Document Number	Rev
A3	LA480	SD

Date: Friday, January 06, 2012 Sheet 59 of 103

SSID = Flash.ROM

SPI FLASH ROM (8M byte) for PCH

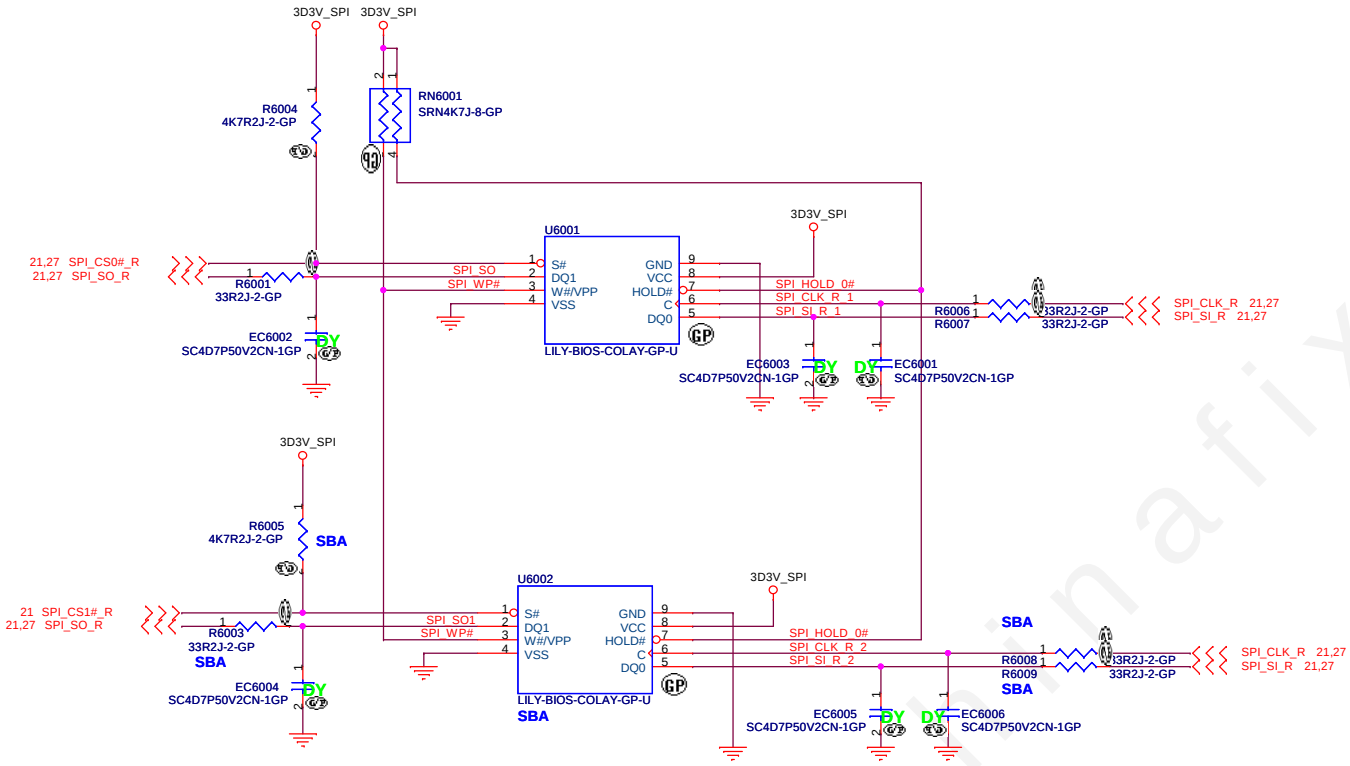

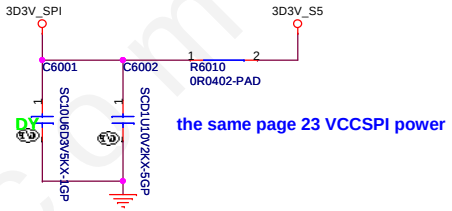

4MB			
S08	Marcronix	MX25L3206EM2I-12G	72.25320.C01
	Winbond	W25Q032BVSSIG	72.25Q32.A01
	Numonyx	N25Q032A13ESE40	72.25032.H01
8MB			
S08	Marcronix	MX25L6406EM2I-12G	72.25640.D01
	Winbond	W25Q064CVSSIG	72.25Q64.B01
	Numonyx	N25Q064A13ESE40	72.25Q64.D01
16MB			
WSON	Marcronix	MX25L12836EZNI-10G	72.25128.X01
		MX25L12835EZNI-10G	72.25128.Y01
	Winbond	W25Q128BVEIG	72.25128.I01
	Numonyx	N25Q128A13EF840	72.25128.B03

SSID = RBATT

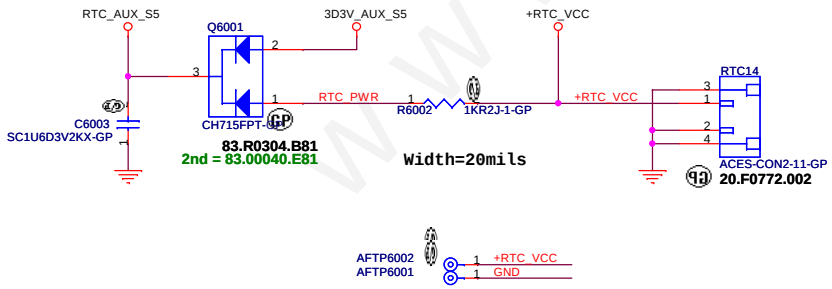

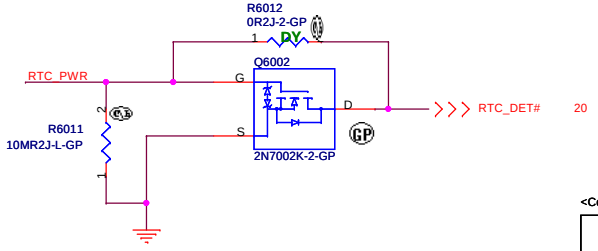

www.chinafix.com

<Core Design>

緯創資通 Wistron Corporation
21F, 88, Sec.1, Hsin Tai Wu Rd., Hsichih,
Taipei Hsien 221, Taiwan, R.O.C.

Title: **Flash/RTC**

Size: A3 | Document Number: **LA480** | Rev: **SD**

Date: Friday, January 06, 2012 | Sheet 60 of 103

USB Board CONN.

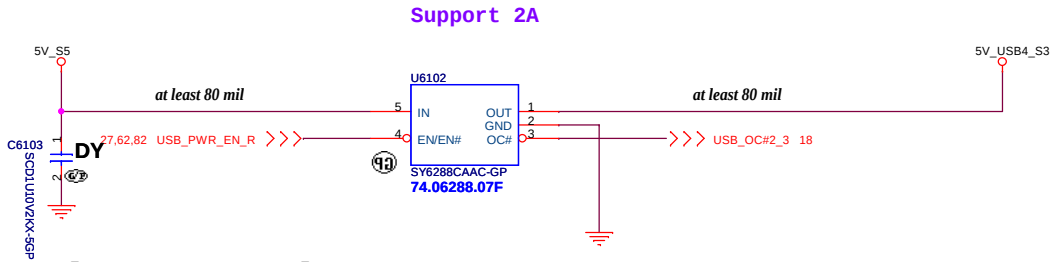

Place U6102 close to USBCN1

www.chinafix.com

<Core Design>

緯創資通 Wistron Corporation
21F, 88, Sec.1, Hsin Tai Wu Rd., Hsichih,
Taipei Hsien 221, Taiwan, R.O.C.

Title: USB Connector

Size	Document Number	Rev
A3	LA480	SD

Date: Friday, January 06, 2012 Sheet 61 of 103

USB3.0 Port1

USB3.0 Port2

USB3.0 Port3

USB3.0 Port4

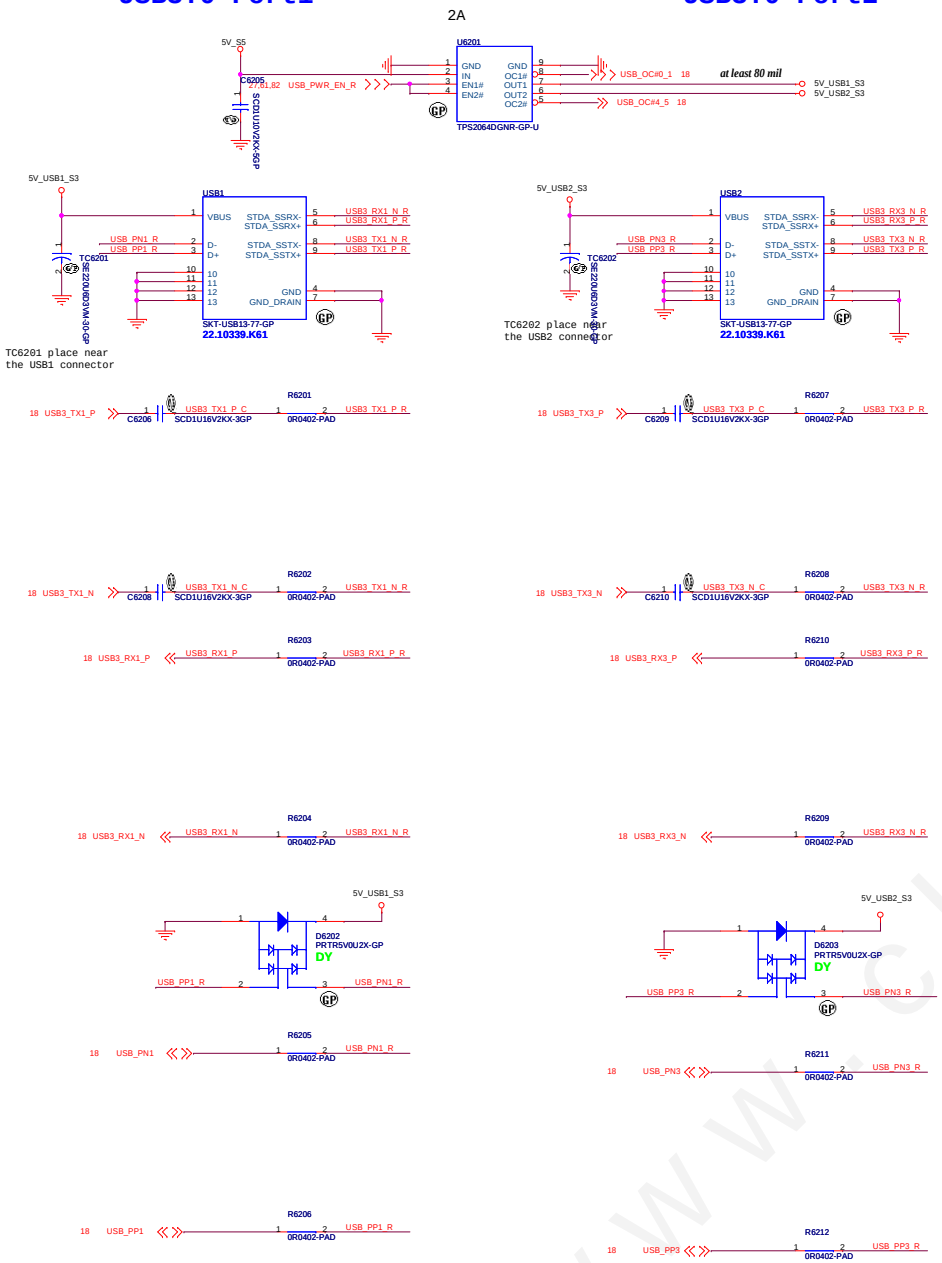

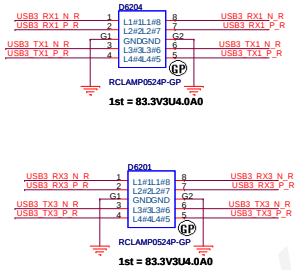

www.chinafix.com

<Core Design>

緯創資通 **Wistron Corporation**
21F, 88, Sec.1, Hsin Tai Wu Rd., Hsichih,
Taipei Hsien 221, Taiwan, R.O.C.

Title: *USB 3.0 Port*2*

Size	Document Number	Rev
A2	LA480	SD

Date: Friday, January 06, 2012 Sheet 62 of 103

SSID = User.Interface

Bluetooth conn.

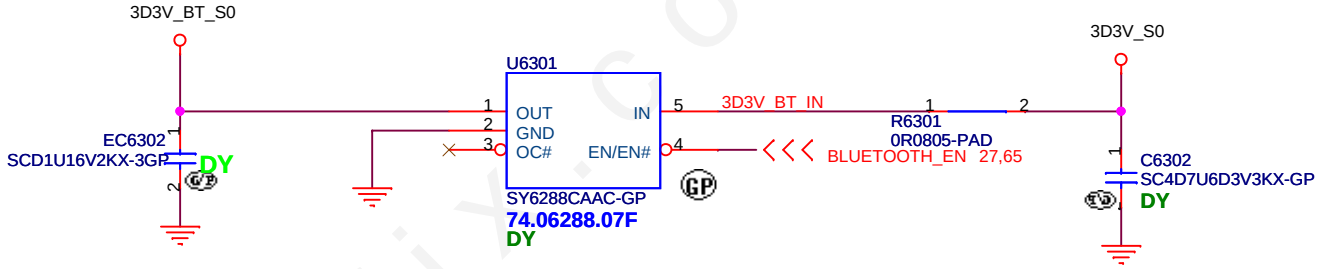

SILERGY	74.06288.07F	SY6288CAAC	High Active
DIODES	74.02171.07F	AP2171WG-7	High Active
UPI	74.07534.A7F	OBS	High Active
GMT	74.05240.A7F	OBS	High Active

BT Module pin definition is same as LA470

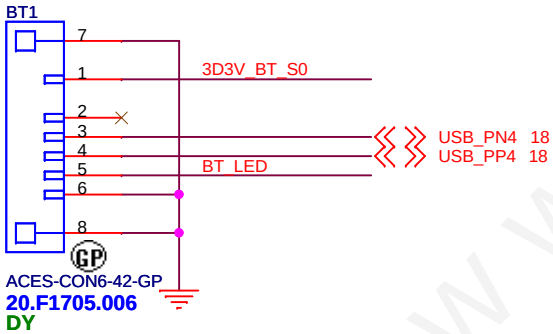

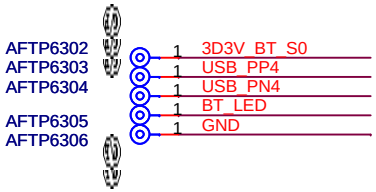

<Core Design>

緯創資通 Wistron Corporation
21F, 88, Sec.1, Hsin Tai Wu Rd., Hsichih,
Taipei Hsien 221, Taiwan, R.O.C.

Title: **Bluetooth**

Size	Document Number	Rev
A4	LA480	SD

Date: Friday, January 06, 2012 Sheet 63 of 103

www.chinafix.com

Finger Printer Connector

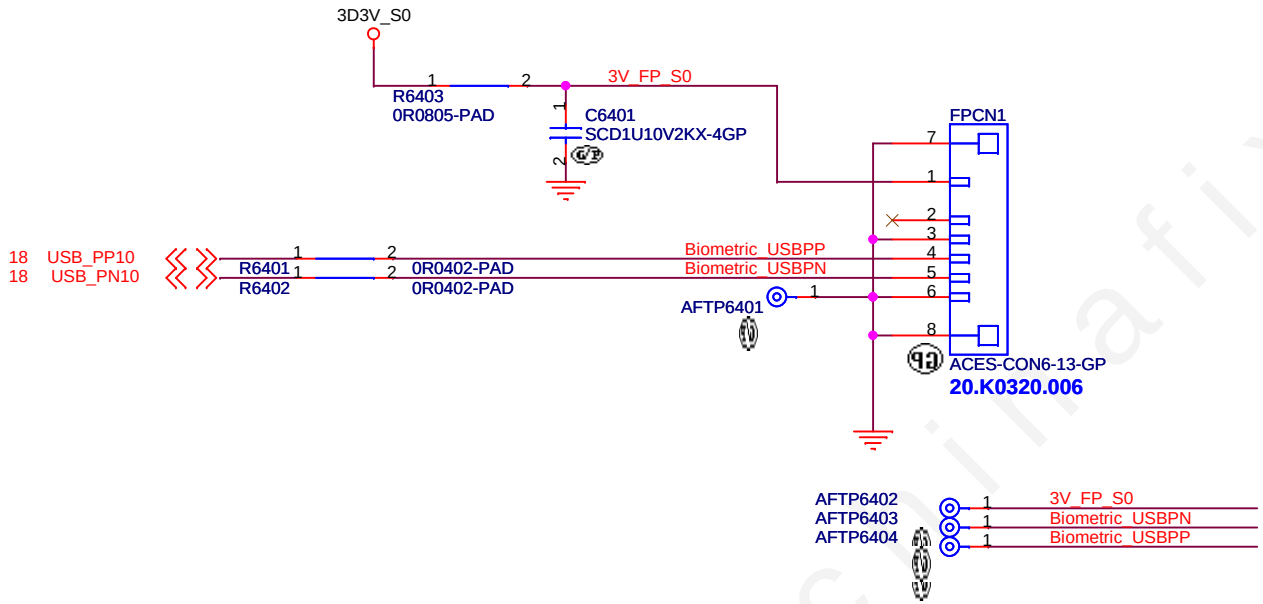

www.chinafix.com

<Core Design>

緯創資通 Wistron Corporation
21F, 88, Sec.1, Hsin Tai Wu Rd., Hsichih,
Taipei Hsien 221, Taiwan, R.O.C.

Title	Finger Printer Connector	
Size A4	Document Number LA480	Rev SD
Date: Friday, January 06, 2012	Sheet 64 of 103	

SSID = Wireless

Mini Card Connector(802.11a/b/g/n)

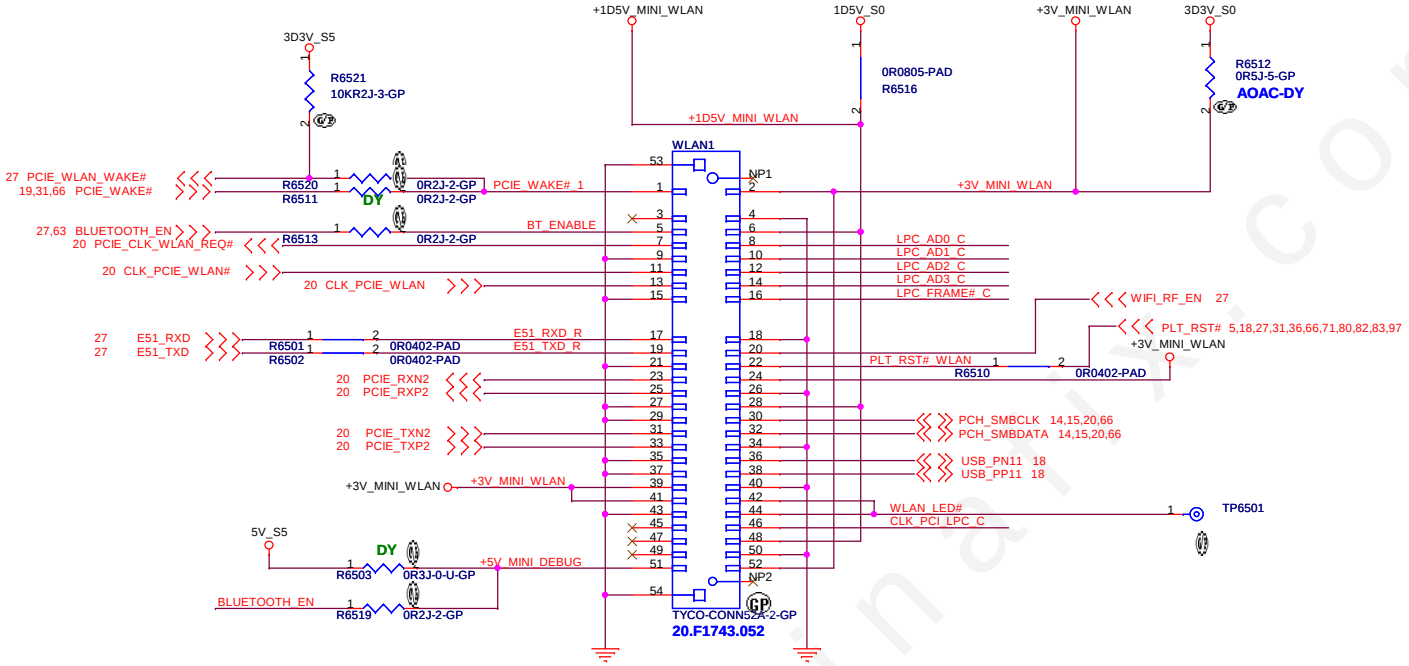

Place near MINI Card CONN

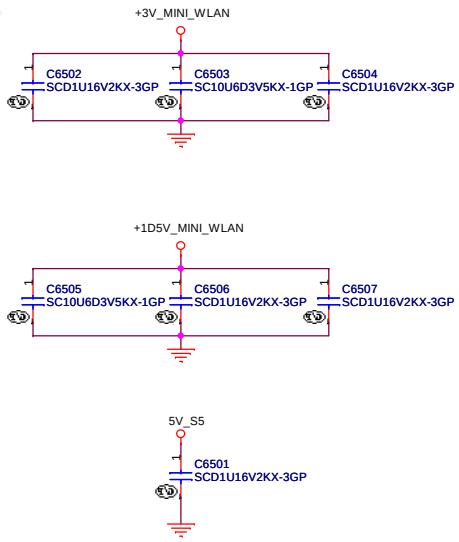

Reserve for AOAC

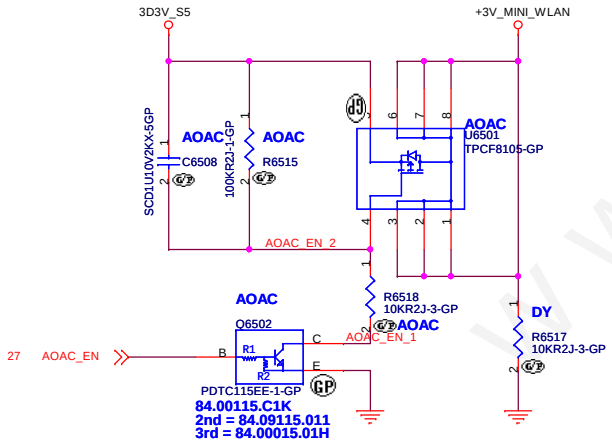

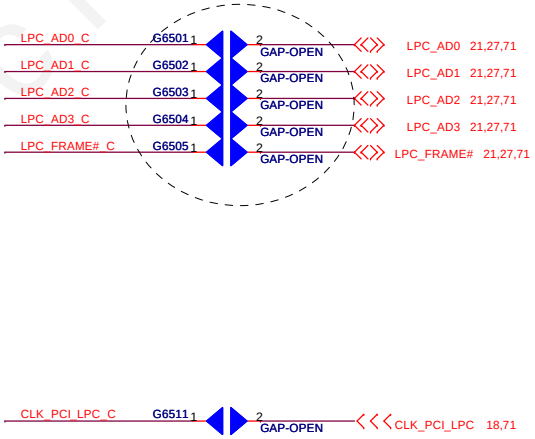

G6506~G6511
placememt close close WLAN1
in bottom side

<Core Design>

緯創資通	Wistron Corporation 21F, 88, Sec.1, Hsin Tai Wu Rd., Hsichih, Taipei Hsien 221, Taiwan, R.O.C.
Title	MINICARD(WLAN)/ITP CONN
Size A3	Document Number LA480
Rev	SD
Date: Friday, January 06, 2012	Sheet 65 of 103

www.chinafix.com

SSID = Wireless

mSATA for V Series Only

Mini Card Connector(Full Card)

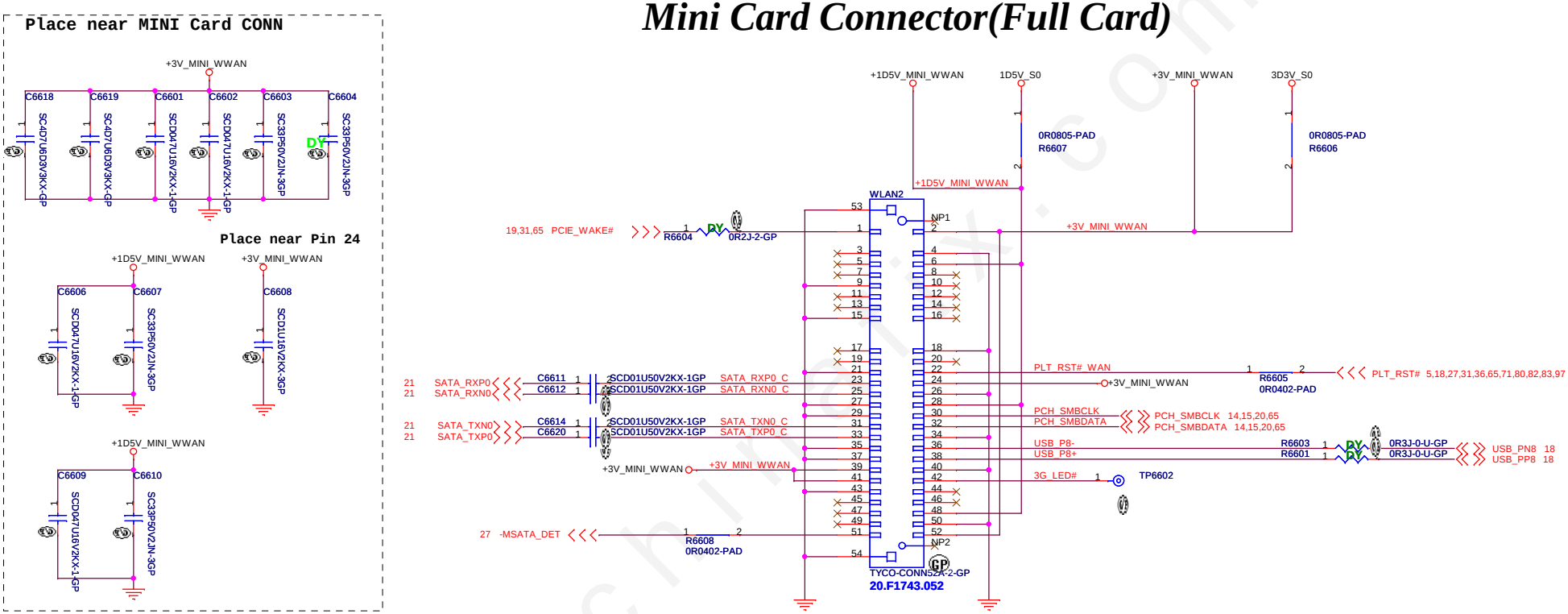

www.chinafix.com

<Core Design>

緯創資通 **Wistron Corporation**
21F, 88, Sec.1, Hsin Tai Wu Rd., Hsichih,
Taipei Hsien 221, Taiwan, R.O.C.

Title: **WWAN Connector**

Size	Document Number	Rev
A3	LA480	SD

Date: Friday, January 06, 2012 Sheet 66 of 103

BLANK

www.chinafix.com

<Core Design>

緯創資通 Wistron Corporation
21F, 88, Sec.1, Hsin Tai Wu Rd., Hsichih,
Taipei Hsien 221, Taiwan, R.O.C.

Title	***Reserved***	
Size A4	Document Number **LA480**	Rev **SD**
Date: Friday, January 06, 2012	Sheet 67 of 103	

SSID = User.Interface

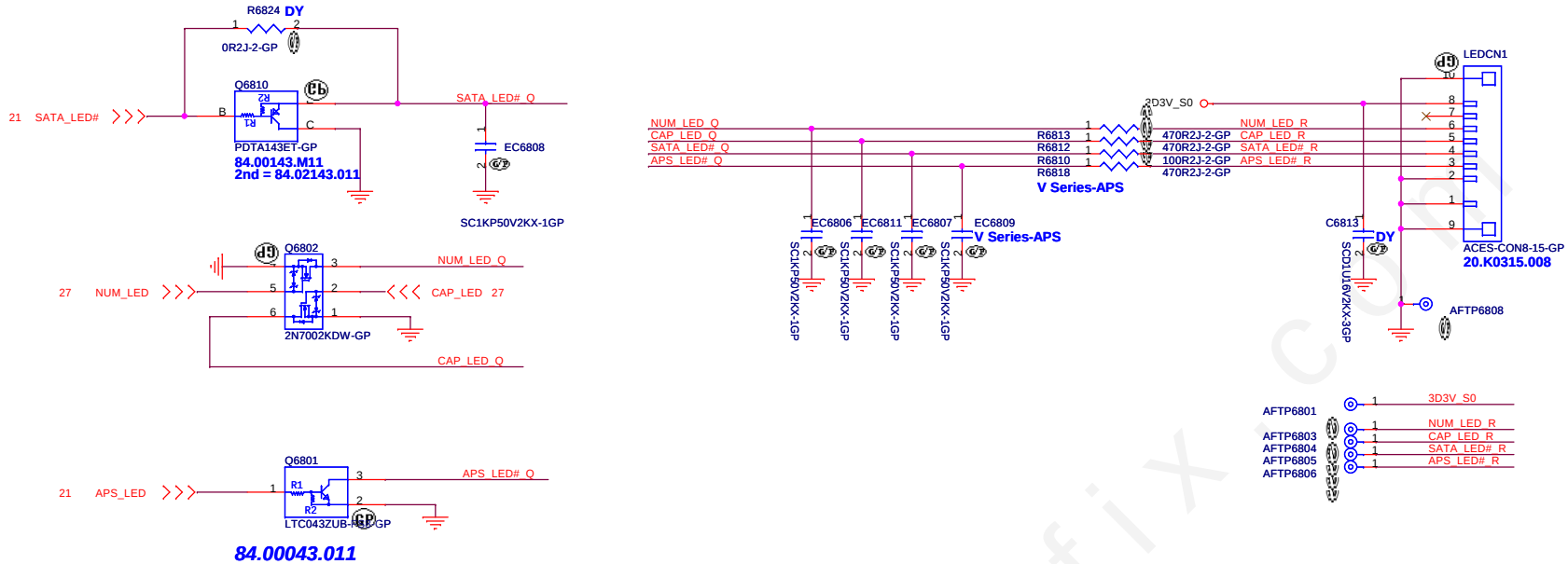

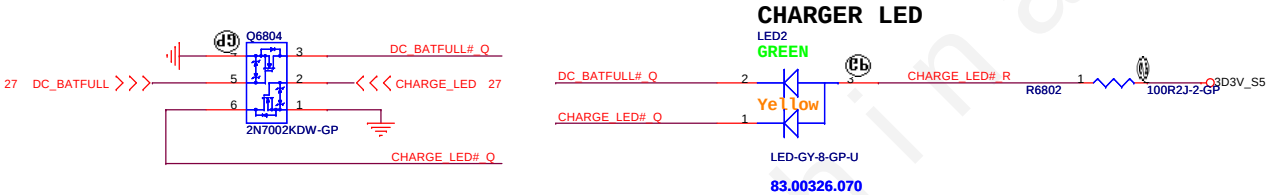

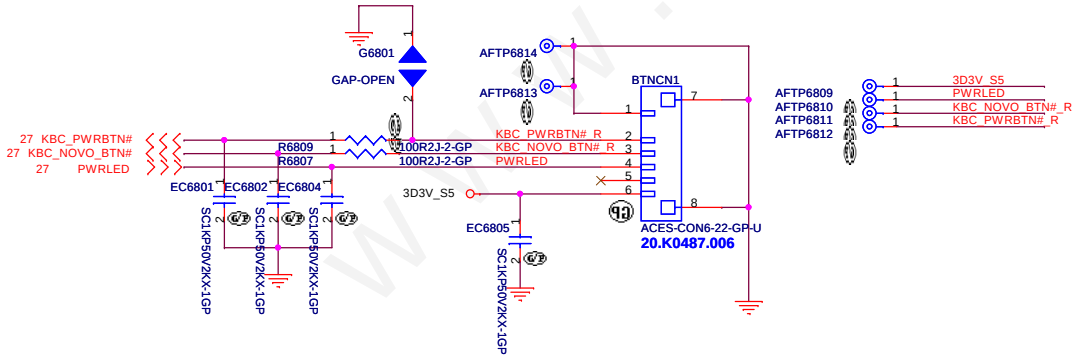

www.chinafix.com

<Core Design>

緯創資通 Wistron Corporation
21F, 88, Sec.1, Hsin Tai Wu Rd., Hsichih,
Taipei Hsien 221, Taiwan, R.O.C.

Title: LED Bard/Power Button

Size	Document Number	Rev
A3	LA480	SD

Date: Friday, January 06, 2012 Sheet 68 of 103

SSID = KBC

Internal KeyBoard Connector

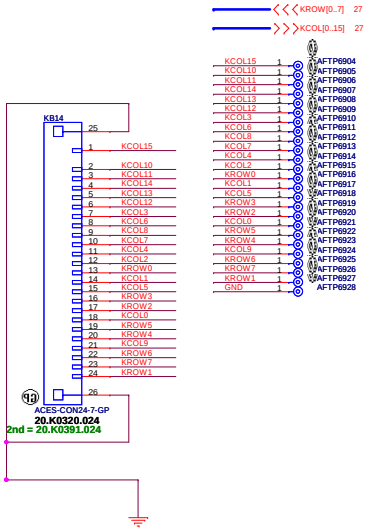

KB14 for 14" VB480 & VB485
KB15 for 15" VB580 & VB585

SSID = Touch.Pad

Normal Pad for B Series 5V
ClickPad for V Series 3.3V

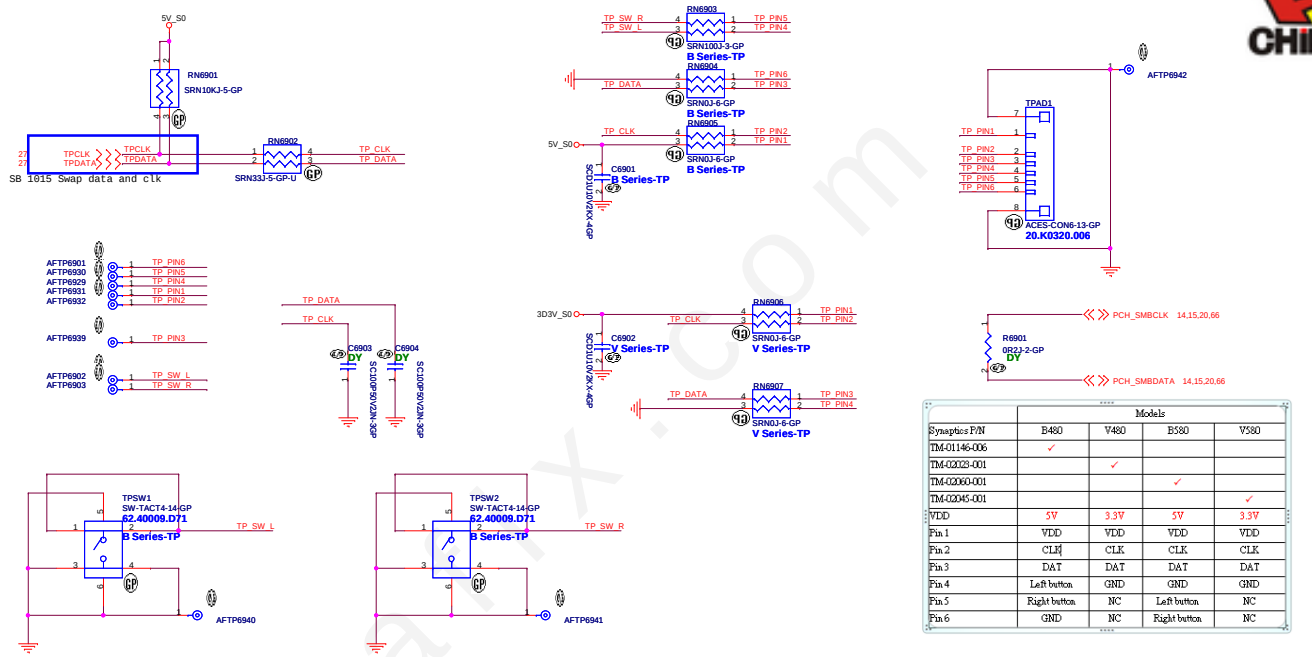

Synaptics P/N	Models			
	B480	V480	B580	V580
TM-01146-006	✓			
TM-02023-001		✓		
TM-02060-001			✓	
TM-02045-001				✓
VDD	5V	3.3V	5V	3.3V
Pin 1	VDD	VDD	VDD	VDD
Pin 2	CLK	CLK	CLK	CLK
Pin 3	DAT	DAT	DAT	DAT
Pin 4	Left button	GND	GND	GND
Pin 5	Right button	NC	Left button	NC
Pin 6	GND	NC	Right button	NC

* Membrane Pin Out Top View :

PIN #	7	11	13	18	14	10	17	15	16	4	23	22	19	20	21	24	12	1	8	9	5	6	3	2
As-sign	D 1	D 2	D 3	D 4	D 5	D 6	D 7	D 8	D 9	D 10	D 11	D 12	D 13	D 14	D 15	D 16	S 1	S 2	S 3	S 4	S 5	S 6	S 7	S 8

www.chinafix.com

<Core Design>

緯創資通 **Wistron Corporation**
21F, 88, Sec.1, Hsin Tai Wu Rd., Hsichih, Taipei Hsien 221, Taiwan, R.O.C.

Title: **TOUCH PAD CONNECTOR**

Size: A2 | Document Number: **LA480** | Rev: **SD**

Date: Friday, January 06, 2012 | Sheet 69 of 103

www.chinafix.com

<Core Design>

緯創資通 **Wistron Corporation**
21F, 88, Sec.1, Hsin Tai Wu Rd., Hsichih,
Taipei Hsien 221, Taiwan, R.O.C.

Title

Hall Sensor

Size	Document Number	Rev
A4	**LA480**	**SD**

Date: Friday, January 06, 2012 Sheet 70 of 103

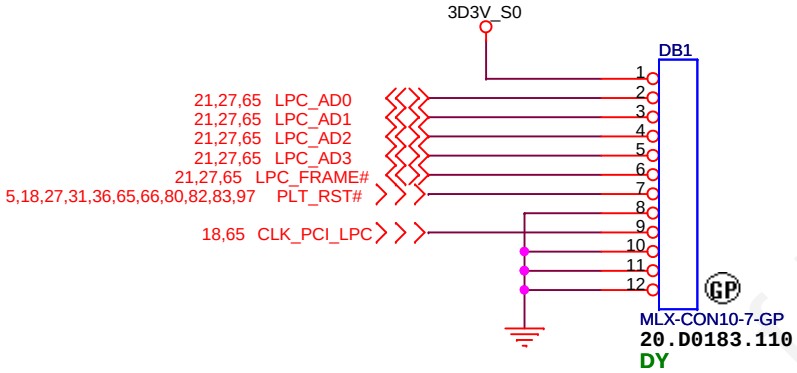

www.chinafix.com

<Core Design>

緯創資通	**Wistron Corporation** 21F, 88, Sec.1, Hsin Tai Wu Rd., Hsichih, Taipei Hsien 221, Taiwan, R.O.C.
Title	***Dubug connector***
Size A4	Document Number **LA480**
Rev	**SD**
Date: Friday, January 06, 2012	Sheet 71 of 103

BLANK

www.chinafix.com

<Core Design>

緯創資通 Wistron Corporation
21F, 88, Sec.1, Hsin Tai Wu Rd., Hsichih,
Taipei Hsien 221, Taiwan, R.O.C.

Title	***Reserved***	
Size A4	Document Number **LA480**	Rev **SD**
Date: Friday, January 06, 2012	Sheet 72 of 103	

BLANK

www.chinafix.com

<Core Design>

緯創資通 Wistron Corporation
21F, 88, Sec.1, Hsin Tai Wu Rd., Hsichih,
Taipei Hsien 221, Taiwan, R.O.C.

Title	***Reserved***	
Size A4	Document Number **LA480**	Rev **SD**
Date: Friday, January 06, 2012	Sheet 73 of 103	

www.chinafix.com

<Core Design>

緯創資通 **Wistron Corporation**
21F, 88, Sec.1, Hsin Tai Wu Rd., Hsichih,
Taipei Hsien 221, Taiwan, R.O.C.

Title	***CARD Reader CONN***	
Size: A2	Document Number: **LA480**	Rev: **SD**
Date: Friday, January 06, 2012	Sheet 74 of 103	

BLANK

www.chinafix.com

<Core Design>

緯創資通 Wistron Corporation
21F, 88, Sec.1, Hsin Tai Wu Rd., Hsichih,
Taipei Hsien 221, Taiwan, R.O.C.

Title	New Card	
Size A4	Document Number LA480	Rev SD
Date: Friday, January 06, 2012	Sheet 75 of 103	

BLANK

www.chinafix.com

<Core Design>

緯創資通 Wistron Corporation
21F, 88, Sec.1, Hsin Tai Wu Rd., Hsichih,
Taipei Hsien 221, Taiwan, R.O.C.

Title	***Reserved***	
Size A4	Document Number **LA480**	Rev **SD**
Date: Friday, January 06, 2012	Sheet 76 of 103	

www.chinafix.com

<Core Design>

緯創資通 **Wistron Corporation**
21F, 88, Sec.1, Hsin Tai Wu Rd., Hsichih,
Taipei Hsien 221, Taiwan, R.O.C.

Title

Reserved

Size	Document Number	Rev
A4	**LA480**	**SD**

Date: Friday, January 06, 2012 Sheet 77 of 103

BLANK

www.chinafix.com

<Core Design>

緯創資通 Wistron Corporation
21F, 88, Sec.1, Hsin Tai Wu Rd., Hsichih,
Taipei Hsien 221, Taiwan, R.O.C.

Title	***Reserved***	
Size A4	Document Number **LA480**	Rev **SD**
Date: Friday, January 06, 2012	Sheet 78 of 103	

G-Sensor
V Series Only

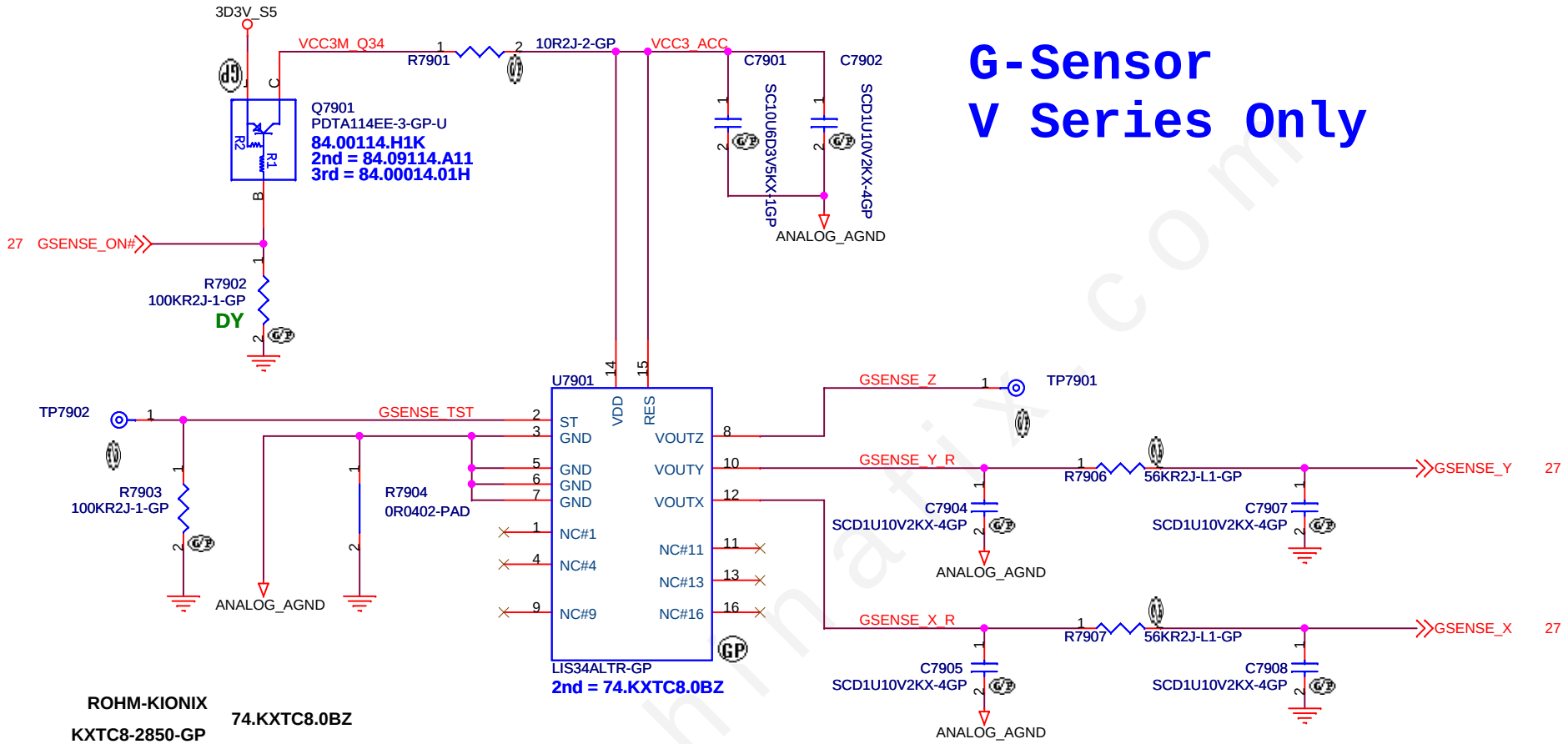

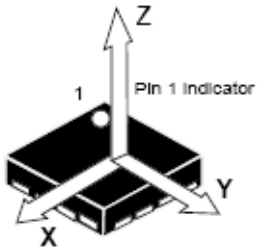

Layout Comment :

(1) Place C483, C484, Q46, R528, R530, C479, C476, R509, R508 close to U55.

(2) Avoid routing under DCDC switching area.

<Core Design>

緯創資通	**Wistron Corporation** 21F, 88, Sec.1, Hsin Tai Wu Rd., Hsichih, Taipei Hsien 221, Taiwan, R.O.C.
Title	**G-Sensor**
Size A4	Document Number **LA480** Rev **SD**
Date: Friday, January 06, 2012	Sheet 79 of 103

www.chinafix.com

RFID

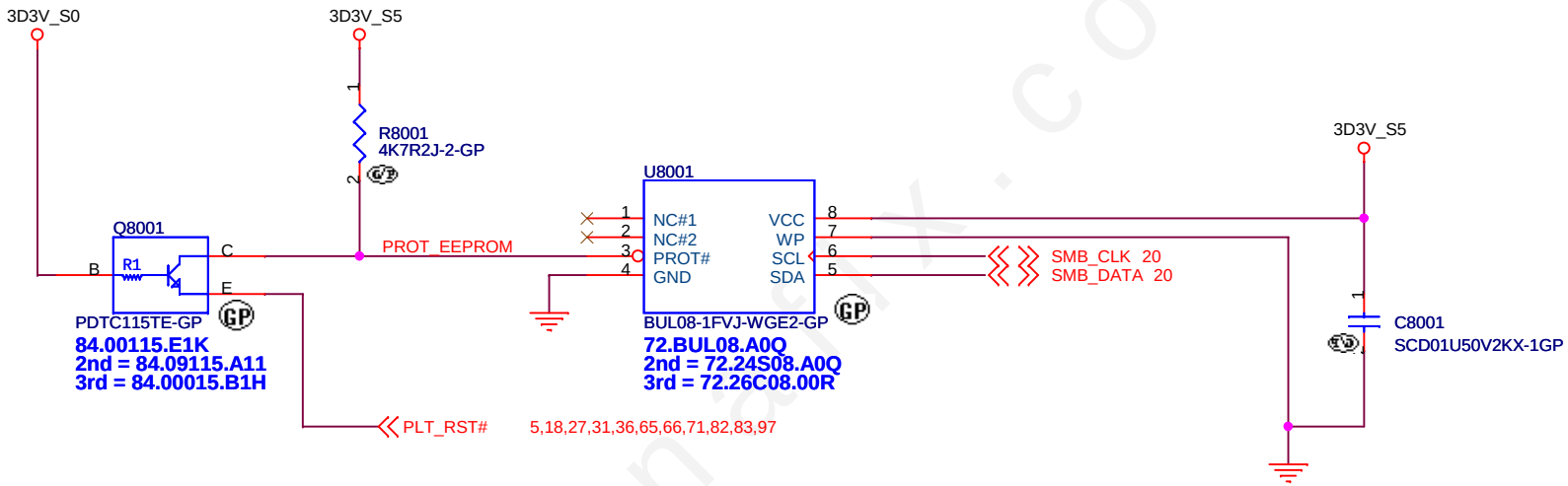

Table 80.1- Transistor multi-source

Supplier	Description	Lenovo P/N	Wistron P/N
NXP	PDTC115TE	N/A	84.00115.E1K
ROHM	LTC015TEB	N/A	84.00015.B1H
Panasonic	DRC9115T0L	N/A	84.09115.A11

Table 80.2- EEPROM multi-source

Supplier	Description	Lenovo P/N	Wistron P/N
ROHM	BUL08-1FVJ-WGE2	N/A	72.BUL08.A0Q
NXP	PCA24S08ADP	N/A	72.24S08.A0Q
SANYO	LE26CAP08TT-TLM-H	N/A	72.26C08.00R

<Core Design>

緯創資通 **Wistron Corporation**
21F, 88, Sec.1, Hsin Tai Wu Rd., Hsichih,
Taipei Hsien 221, Taiwan, R.O.C.

Title: **RF ID**

Size: A4 | Document Number: **LA480** | Rev: **SD**

Date: Friday, January 06, 2012 | Sheet 80 of 103

www.chinafix.com

BLANK

www.chinafix.com

<Core Design>

緯創資通 Wistron Corporation
21F, 88, Sec.1, Hsin Tai Wu Rd., Hsichih,
Taipei Hsien 221, Taiwan, R.O.C.

Title	***Reserved***	
Size A4	Document Number **LA480**	Rev **SD**
Date: Friday, January 06, 2012	Sheet 81 of 103	

R8201 and R8203 Dual layout with TR8201

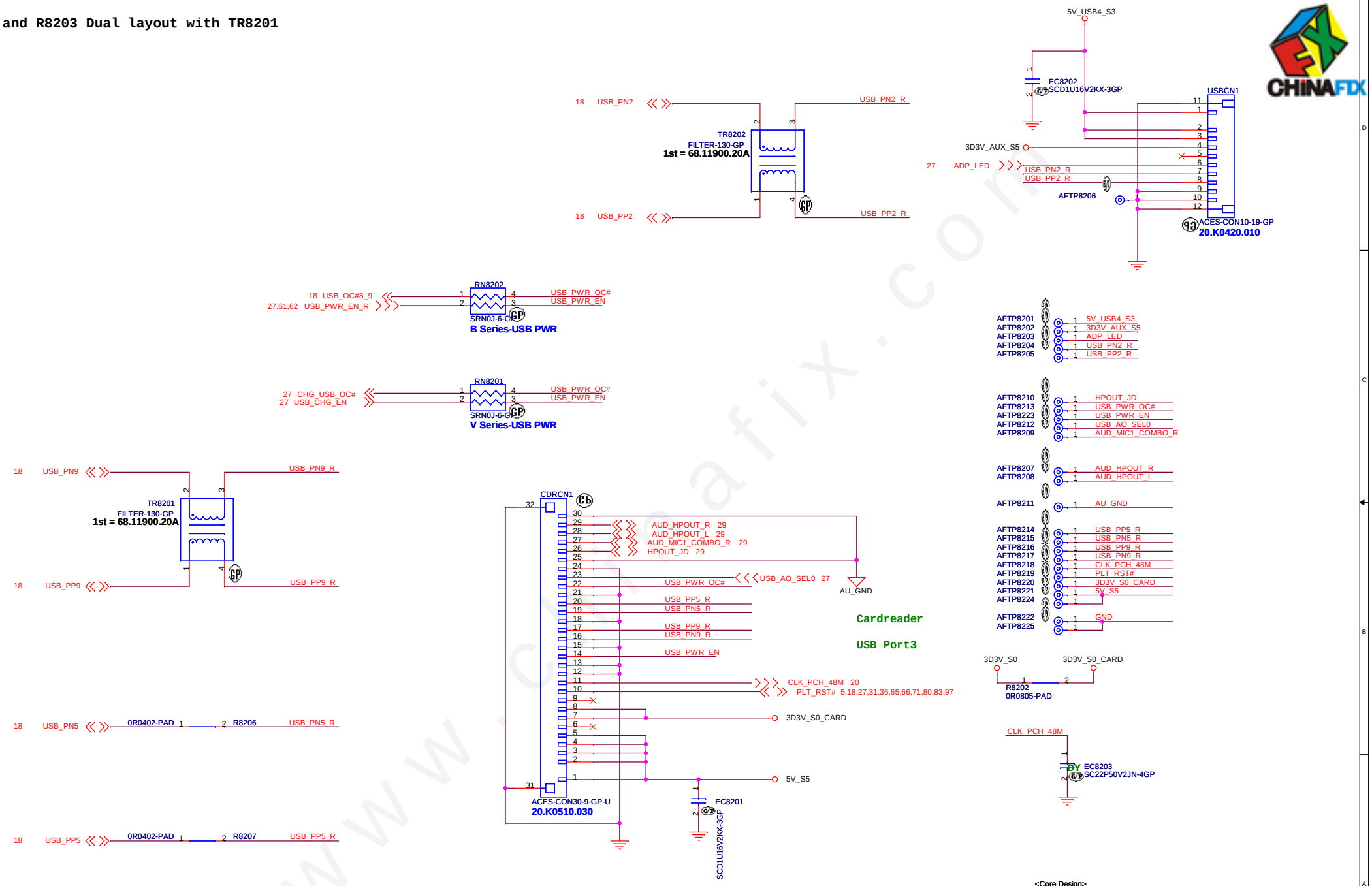

www.chinafix.com

<Core Design>

緯創資通 **Wistron Corporation**
21F, 88, Sec.1, Hsin Tai Wu Rd., Hsichih,
Taipei Hsien 221, Taiwan, R.O.C.

Title: ***IO Board Connector***

Size	Document Number	Rev
A3	LA480	SD

Date: Friday, January 06, 2012 Sheet 82 of 103

PCI Express PEX_IOVVD/Q Combined (DG-05587-001_v03_p.72_Table 10)

Capacitor	Type	Footprint	Population	Location
1.0uF	X6S	0402	4	Under GPU
4.7uF	X6S	0603	2	Near GPU
10uF	X5R	0805	4	Midway Between GPU and Power Supply
22uF	X5R	0805	4	Midway Between GPU and Power Supply

X6S (+/-22%、-55~105℃)
X5R (+/-15%、-55~85℃)

SPEC. (DG-05587-001_v03_p.70)
PEX_CLK_REQ_N is an open-drain bi-directional signal;
by default it should have a 10 kΩ pull-up to 3.3V.
This signal is an active low signal.

SPEC. (DG-05587-001_v03_p.70)
For PCI ECPRESS connection,
please use 0.22uF,20%,0402,X5R
or better AC couplimg capacitors.

PCI Express PEX_SVDD/PLL_HVDD Connected to NV3V3 (DG-05587-001_v03_p.72_Table 12)

Capacitor	Type	Footprint	Population	Location
0.1uF	X5R	0402	1	Near GPU
4.7uF	X5R	0603	2	Near GPU

X5R (+/-15%、-55~85℃)

SPEC. (DG-05587-001_v03_p.70)
PEX_TSTCLK_OUT should be
terminated with a 200Ω resistor.

PCI Express PEX_PLLVDD (DG-05587-001_v03_p.72_Table 11)

Capacitor	Type	Footprint	Population	Location
100nF	X6S	0402	1	Under GPU
1.0uF	X5R	0603	1	Near GPU
4.7uF	X5R	0805	1	Near GPU

X6S (+/-22%、-55~105℃)
X5R (+/-15%、-55~85℃)

SPEC. (DG-05587-001_v03_p.214)
By default, pull-down the TESTMODE pin to GND with a 10kΩ resistor.
For XOR tree testing, TESTMODE should be pulled up to 3v3 with a 10 kΩ resistor.

SPEC. (DG-05587-001_v03_p.70)
PEX_TERMP is used for internal calibration;
pull-down this signal with 2.49 kΩ,1% resistor.

Stuff 0 ohm(63.00000.00L) for N13P-GS/N13M-GS,
Stuff bead(68.00082.001) for N13P-GL/N13M-GE

www.chinafix.com

Wistron Corporation
21F,88,Sec.1,Hsin Tai Wu Rd.,Hsichih,
Taipei Hsien 221, Taiwan, R.O.C

Title: N13P_GPU (1/5): PEG
Size: A2 | Document Number: LA48 | Rev: SD
Date: Friday, January 06, 2012 | Sheet 83 of 103

LVDS Interface

SPEC. (DG-05587-001_v03_p.160)
Pull down IFPxy IOVDD with 10kΩ resistor.
Pull down IFPxy PLLVDD with 10kΩ resistor.
The other IO pins can be NC, this includes unused data lines.

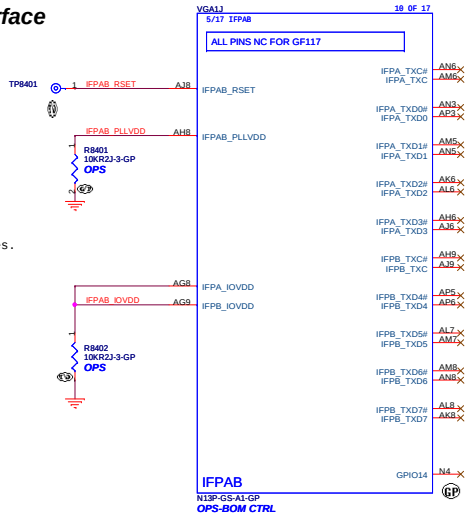

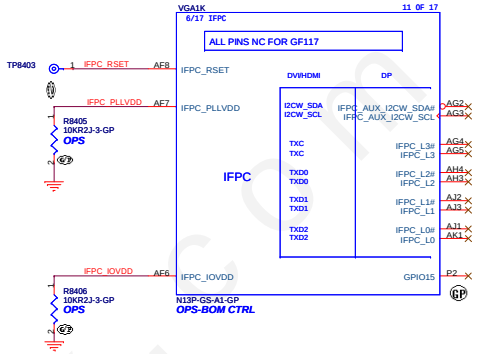

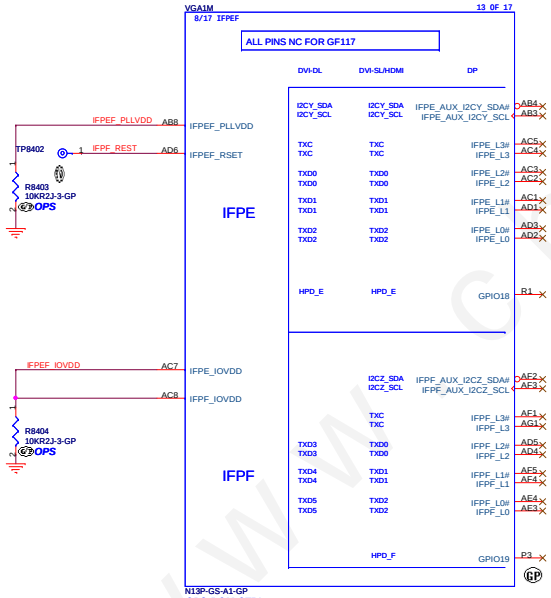

HDMI Interface

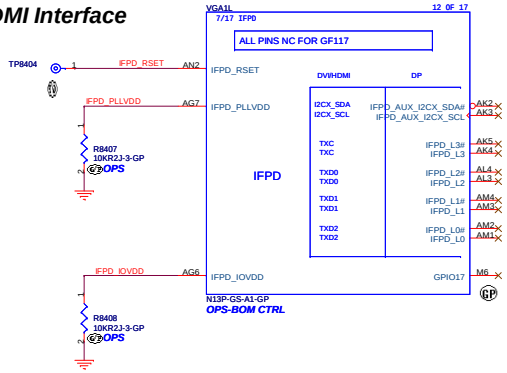

www.chinafix.com

<Core Design>

緯創資通	Wistron Corporation 21F, 88, Sec.1, Hsin Tai Wu Rd., Hsichih, Taipei Hsien 221, Taiwan, R.O.C.
Title	N13P_GPU (2/5): DIGITALOUT
Size A2	Document Number LA48 — Rev SD
Date: Friday, January 06, 2012	Sheet 84 of 103

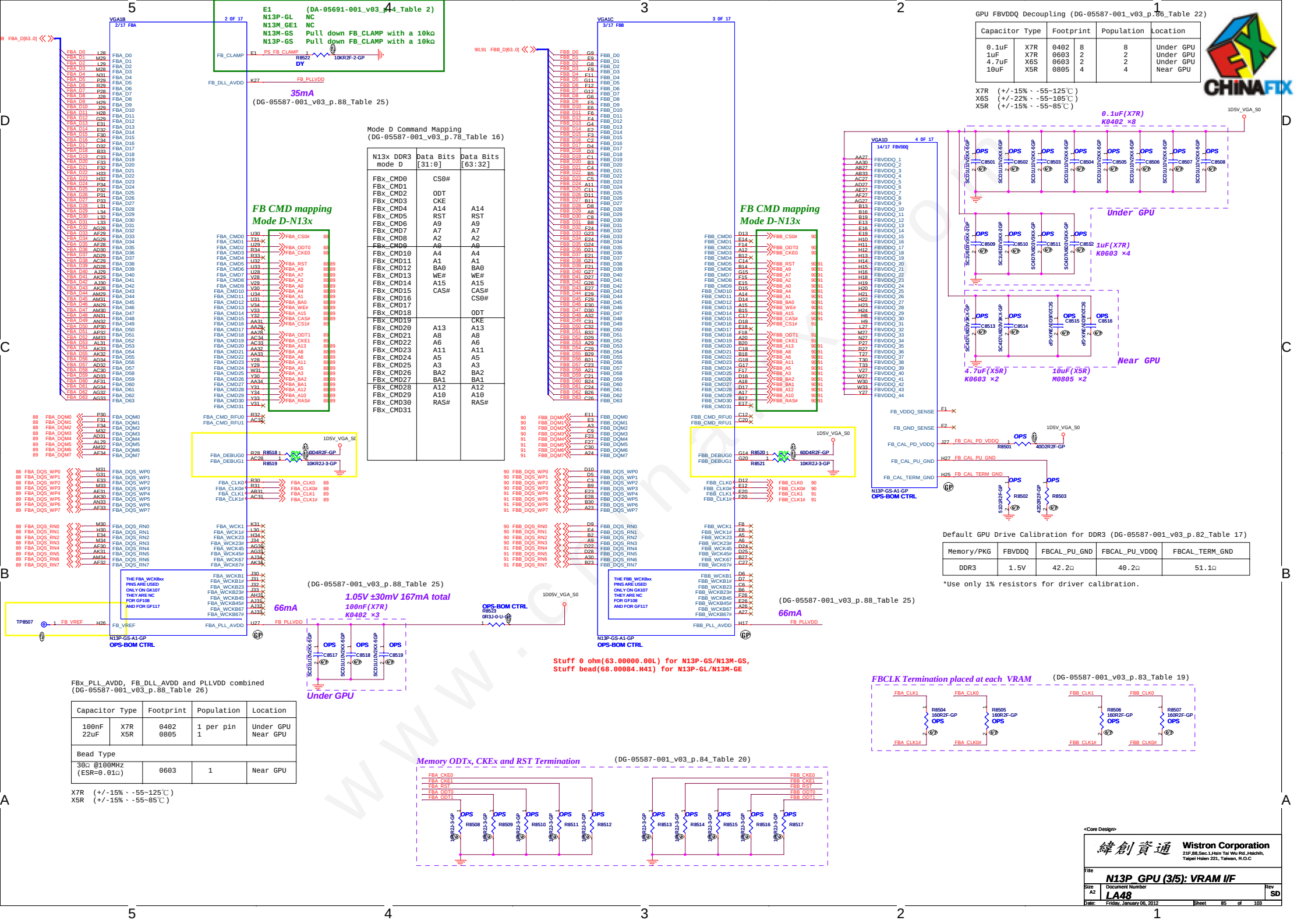

GPU FBVDDQ Decoupling (DG-05587-001_v03_p.86_Table 22)

Capacitor	Type	Footprint	Population		Location
0.1uF	X7R	0402	8	8	Under GPU
1uF	X7R	0603	2	2	Under GPU
4.7uF	X6S	0603	2	2	Under GPU
10uF	X5R	0805	4	4	Near GPU

X7R (+/-15%、-55~125℃)
X6S (+/-22%、-55~105℃)
X5R (+/-15%、-55~85℃)

Default GPU Drive Calibration for DDR3 (DG-05587-001_v03_p.82_Table 17)

Memory/PKG	FBVDDQ	FBCAL_PU_GND	FBCAL_PU_VDDQ	FBCAL_TERM_GND
DDR3	1.5V	42.2Ω	40.2Ω	51.1Ω

*Use only 1% resistors for driver calibration.

FBx_PLL_AVDD, FB_DLL_AVDD and PLLVDD combined
(DG-05587-001_v03_p.88_Table 26)

Capacitor	Type	Footprint	Population	Location
100nF 22uF	X7R X5R	0402 0805	1 per pin 1	Under GPU Near GPU
Bead Type				
30Ω @100MHz (ESR=0.01Ω)		0603	1	Near GPU

X7R (+/-15%、-55~125℃)
X5R (+/-15%、-55~85℃)

www.chinafix.com

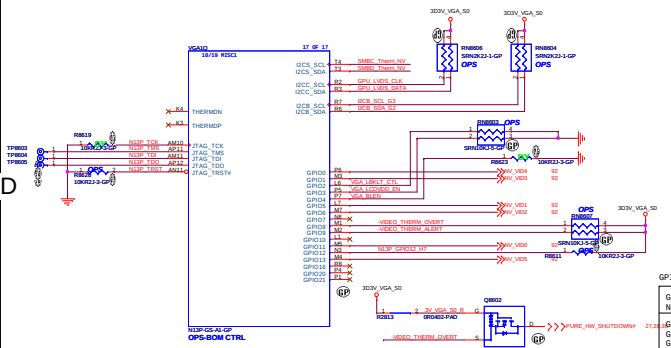

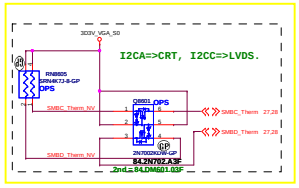

GPIO Description (DG-05587-001_v03_p.82_Tale 98)

GPIO pin Name	Normal Function	I/O	Function Description
GPIO0	GPU_VID4	O	GPU Core VDD VID4
GPIO1	GPU_VID3	O	GPU Core VDD VID3
GPIO2	LCD_BL_PWM	O	Panel Backlight PWM Brightness Control
GPIO3	LCD_VCC	O	Panel Power Enable
GPIO4	LCD_BLEN	O	panel Backlight Enale
GPIO5	GPU_VID1	O	GPU Core VDD VID1
GPIO6	GPU_VID2	O	GPU Core VDD VID2
GPIO7	3D Vision	O	3D Vision Left/Right signal
GPIO8	OVERT	I/O	Active Low Thermal Catastrophic Over Temperature
GPIO9	ALERT	I/O	Active Low Thermal Alert
GPIO10	MEM_VREF_CTL	O	Memory VREF Control
GPIO11	GPU_VID0	O	GPU Core VDD VID0
GPIO12	PWR_LEVEL	I	AC Power Detect Input. High = AC, Low = Battery
GPIO13	GPU_VID5	O	GPU Core VDD VID5
GPIO14	HPD_AB	I	Hot Plog Detect for IFPAB
GPIO15	HPD_C	I	Hot Plog Detect for IFPC
GPIO16	MEM_VDD_CTL	O	Memory VDD VID
GPIO17	HPD_D	I	Hot Plog Detect for IFPD
GPIO18	HPD_E	I	Hot Plog Detect for IFPE
GPIO19	HPD_F	I	Hot Plog Detect for IFPF
GPIO20	Reserved		
GPIO21	Reserved		

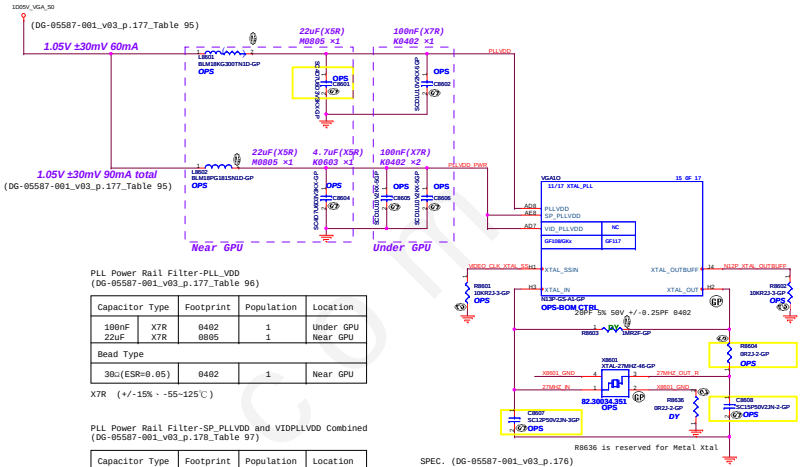

PLL Power Rail Filter-PLL_VDD
(DG-05587-001_v03_p.177_Table 96)

Capacitor Type		Footprint	Population	Location
100nF	X7R	0402	1	Under GPU
22uF	X7R	0805	1	Near GPU
Bead Type				
30Ω(ESR=0.05)		0402	1	Near GPU

X7R (+/-15%、-55~125℃)

PLL Power Rail Filter-SP_PLLVDD and VIDPLLVDD Combined
(DG-05587-001_v03_p.178_Table 97)

Capacitor Type		Footprint	Population	Location
100nF	X7R	0402	2	Under GPU
4.7uF	X7R	0402	1	Near GPU
22uF	X7R	0805	1	Near GPU
Bead Type				
180Ω(ESR=0.2)		0603	1	Near GPU

X7R (+/-15%、-55~125℃)

R8636 is reserved for Metal Xtal

SPEC. (DG-05587-001_v03_p.176)
XTALOUTBUFF signal should be pull down using a 10kΩ resistor.
XTALSSIN signal should be pull down using a 10kΩ resistor.
REmember to place components as close ti the GPU as possible.

SPEC. (DG-05587-001_v03_p.162)
Adding a pull down to the DACA_VDD with a 10kΩ resistor to GND.
All other DAC I/O pins (including DACA_VREF, DACA_REST)
can be left floating.

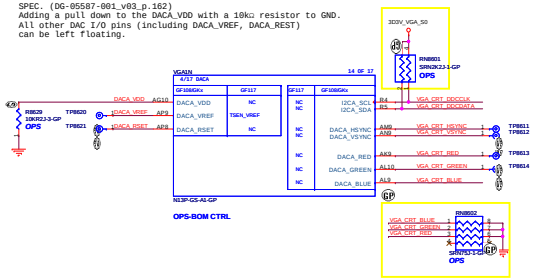

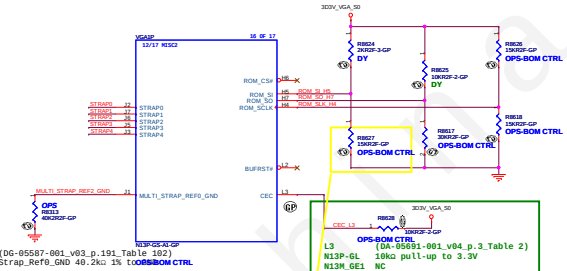

SPEC. (DG-05587-001_v03_p.191_Table 102)
Multi_Strap_Ref0_GND 40.2kΩ 1% to GND

L3	(DA-05691-001_v04_p.3_Table 2)
N13P-GL	10kΩ pull-up to 3.3V
N13M_GE1	NC
N13M-GS	NC
N13P-GS	NC

TABLE VIDEO MEMORY

	HYNIX 128Mx16 0110	SAMSUNG 128Mx16 0111	HYNIX 64Mx16 0010	Samsung 64Mx16 0011
900MHz	72.52G63.A0U 1-007155	72.42164.D0U 1-007156	72.51G63.H0U 1-007157	72.41164.Q0U 1-007356
ROM_SI PD R8627	34.8Kohm 64.34825.6DL	45.3Kohm 64.45325.6DL	15Kohm 64.15025.6DL	20Kohm 64.20025.6DL

The GB4-128 package is available in a 29 mm × 29mm footprint.
128-bit memory interfaces respectively.

Recommended NVVDD Voltage Regulator Phase Coount

GPU SKU	Phase Count Target
N13M-GE1	Single phase
N13M-GS	Two phase
N13P-GL	Two phase
N13P-GS	Two phase

29 x 29 PACKAGE
V: N13P-GS/GL (25~30W)
B: N13M-GS/GE (15~20W)

128Mx16:

hynix - H5TQ2G63BFR-11C
Samsung - K4W2G1646C-HC11

64Mx16:

Hynix - H5TQ1G63DFR-11C
Samsung - K4W1G1646G-BC11

	TABLE NVIDIA	N12P-GE DEV ID: 0xDF5 0101	N12P-GV DEV ID: 0x0DF7(ES)	N12M-GE DEV ID: 0xA7A 1010
STRAP1	R8632	DY	DY	35Kohm 64.34825.6DL
	R8633	35Kohm 64.34825.6DL	35Kohm 64.34825.6DL	DY
STRAP2	R8634	DY	45Kohm 64.45325.6DL	15Kohm 64.15025.6DL
	R8635	30Kohm 64.30025.6DL	DY	DY

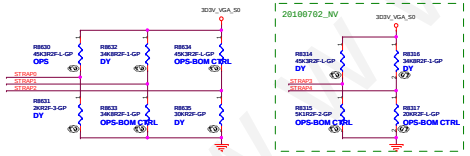

www.chinafix.com

<Core Design>
緯創資通 Wistron Corporation
21F,88,Sec.1,Hsin Tai Wu Rd.,Hsichih,
Taipei Hsien 221, Taiwan, R.O.C
Title: N13P_GPU (4/5): GPIO/STRAP
Size: A1 | Document Number: LA48 | Rev: SD
Date: Friday, January 06, 2012 | Sheet 86 of 103

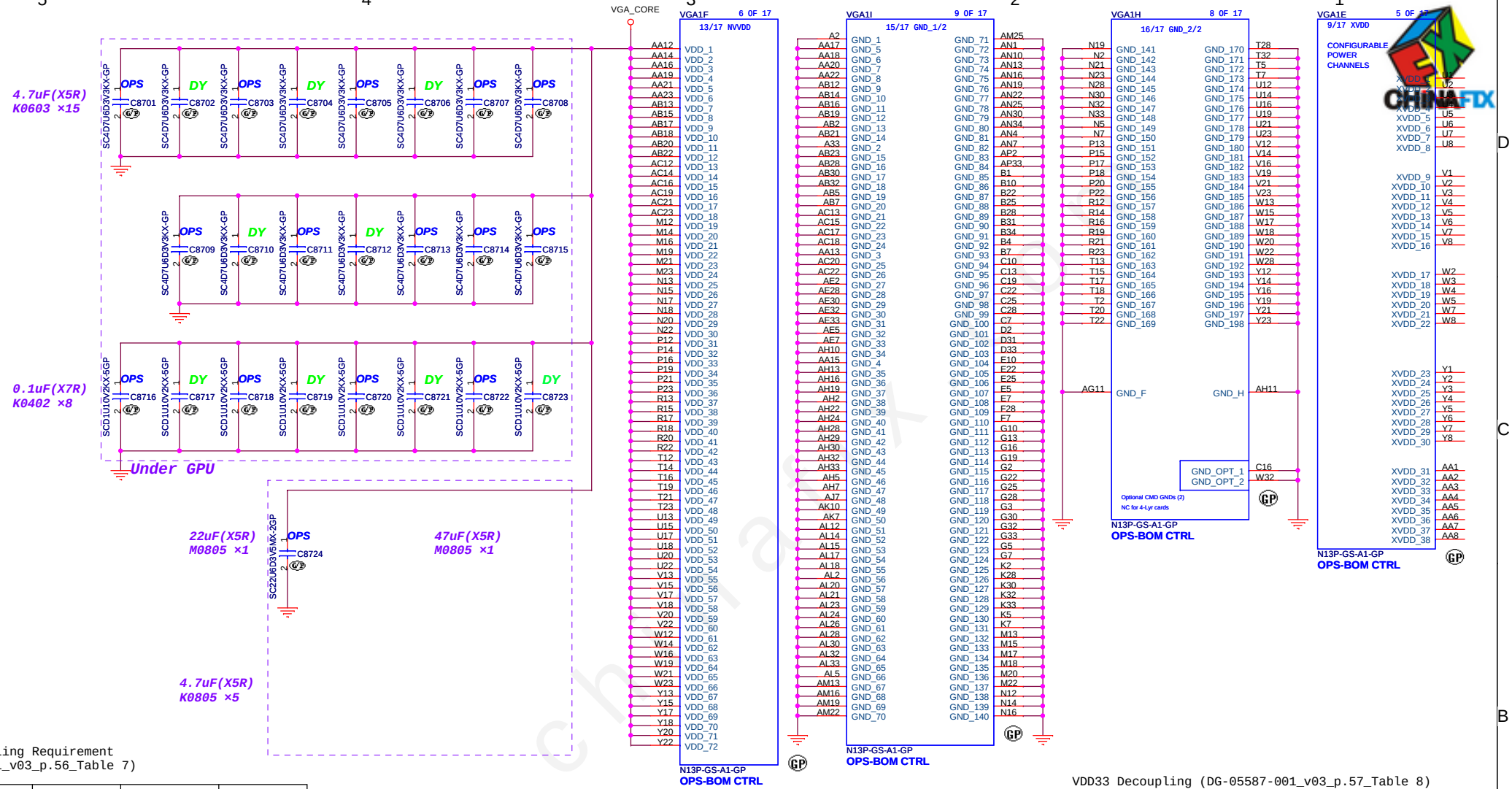

NVVDD Decoupling Requirement
(DG-05587-001_v03_p.56_Table 7)

Capacitor Type		Footprint		Population	Location
4.7uF	X6S	0603	15	10	Under GPU
0.1uF	X7R	0402	8	4	Under GPU
47uF	X5R	0805	1	1	Near GPU
22uF	X5R	0805	1	1	Near GPU
4.7uF	X5R	0805	5	5	Near GPU

X7R (+/-15%、-55~125℃)
X6S (+/-22%、-55~105℃)
X5R (+/-15%、-55~85℃)

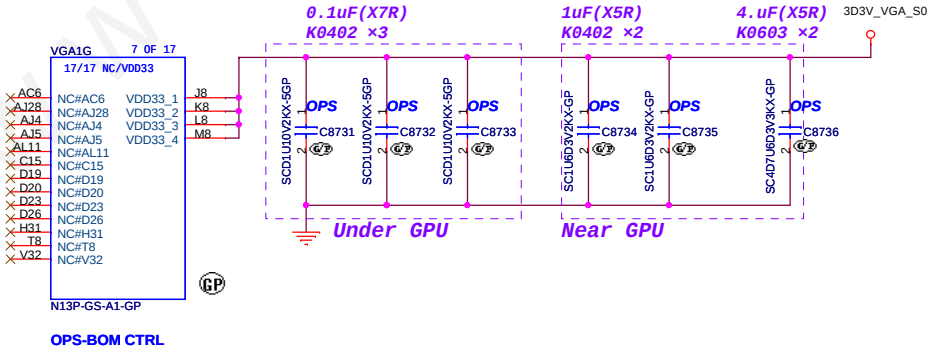

VDD33 Decoupling (DG-05587-001_v03_p.57_Table 8)

Capacitor Type		Footprint		Population	Location
0.1uF	X7R	0402	3	3	Under GPU
1uF	X5R	0402	2	2	Near GPU
4.7uF	X5R	0603	1	1	Near GPU

X7R (+/-15%、-55~125℃)
X5R (+/-15%、-55~85℃)

www.chinafix

<Core Design>

緯創資通 Wistron Corporation
21F,88,Sec.1,Hsin Tai Wu Rd.,Hsichih,
Taipei Hsien 221, Taiwan, R.O.C

Title: **N13P_GPU (5/5): PWR/GND**

Size: A3 | Document Number: **LA48** | Rev: SD

Date: Friday, January 06, 2012 | Sheet 87 of 103

VIDEO FRAME BUFFER PORT A

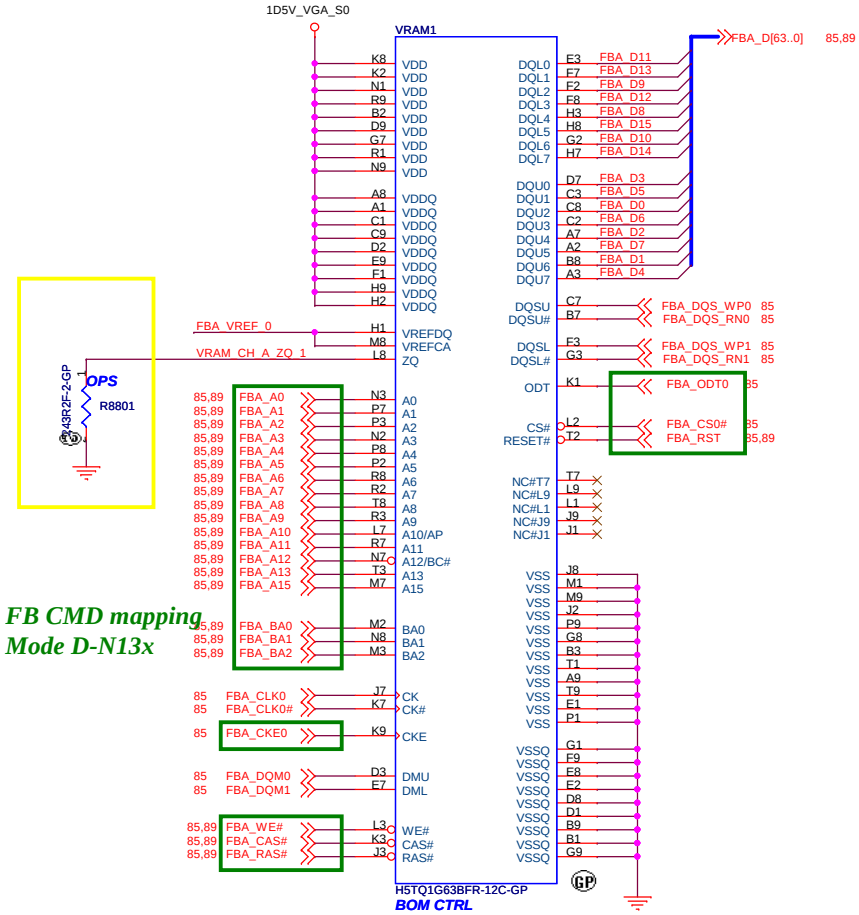

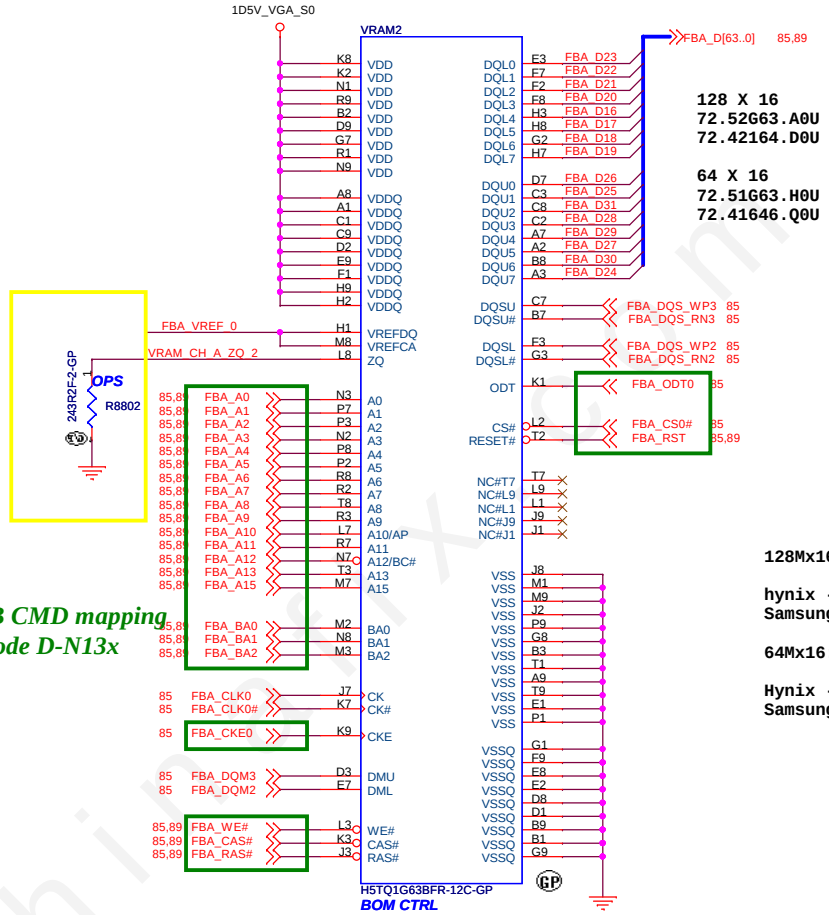

128 X 16
72.52G63.A0U
72.42164.D0U IC VRAM K4W2G1646C-HC11 FBGA96

64 X 16
72.51G63.H0U IC VRAM H5TQ1G63DFR-11C FBGA 96BALLS
72.41646.Q0U IC VRAM K4W1G1646G-BC11 FBGA 96BALLS

128Mx16:

hynix - H5TQ2G63BFR-11C
Samsung - K4W2G1646C-HC11

64Mx16:

Hynix - H5TQ1G63DFR-11C
Samsung - K4W1G1646G-BC11

Combined Memory FBVDD/Q Decoupling DDR3×16 with Clamshell Layout
(DG-05587-001_v03_p.87_Table 23)

Capacitor	Type	Footprint	Population	Location
0.1uF	X7R	0402	4	Close to VRAM
1uF	X7R	0603	8	Close to VRAM

X7R (+/-15%、-55~125℃)
*Per clamshell pair

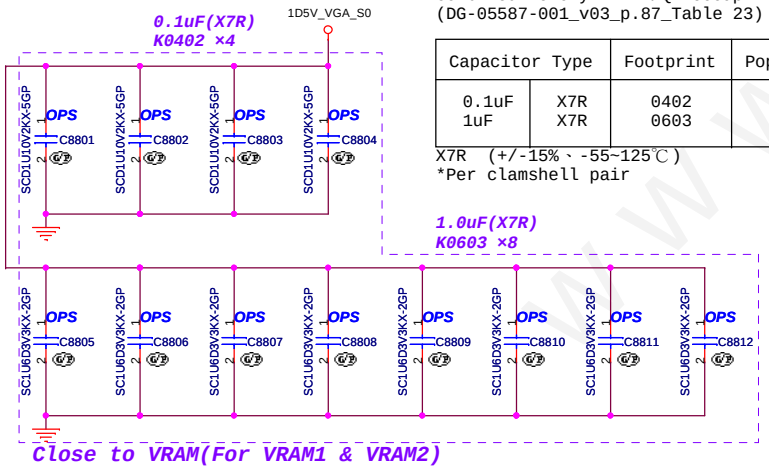

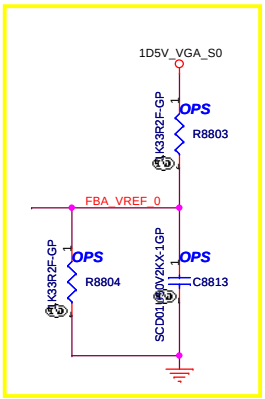

www.chinafix.com

<Core Design>
緯創資通 Wistron Corporation
21F, 88, Sec.1, Hsin Tai Wu Rd., Hsichih,
Taipei Hsien 221, Taiwan, R.O.C.

Title: CHANNEL-A_VRAM1,2 (1/4)
Size: A3 | Document Number: LA48 | Rev: SD
Date: Friday, January 06, 2012 | Sheet 88 of 103

VIDEO FRAME BUFFER PORT A

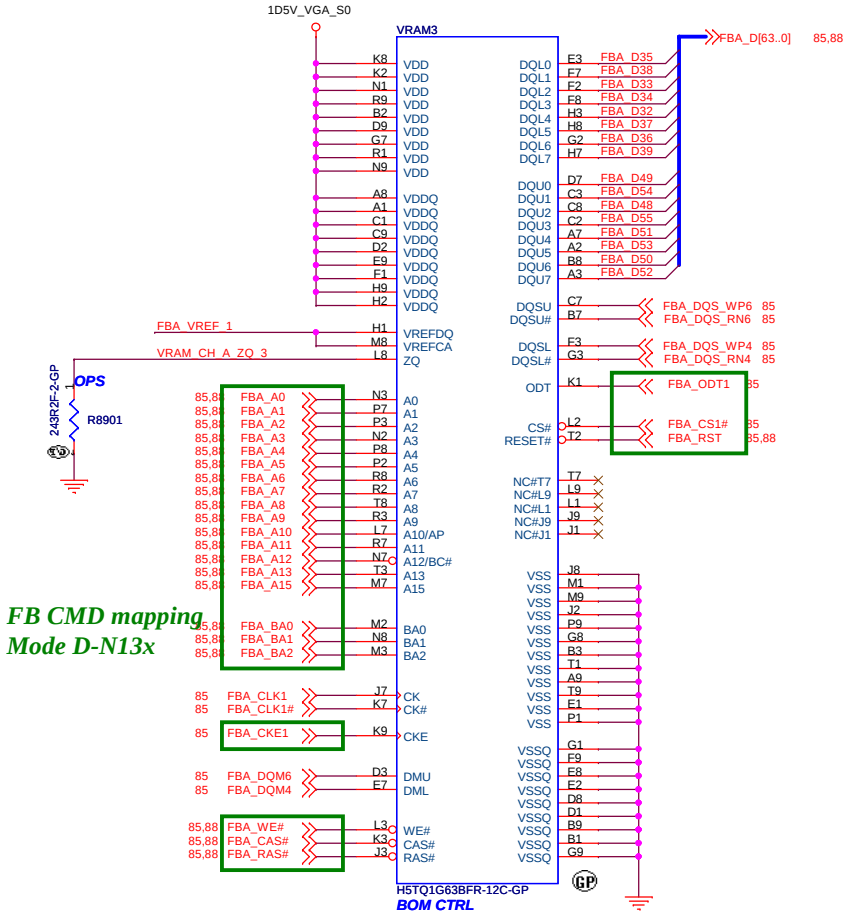

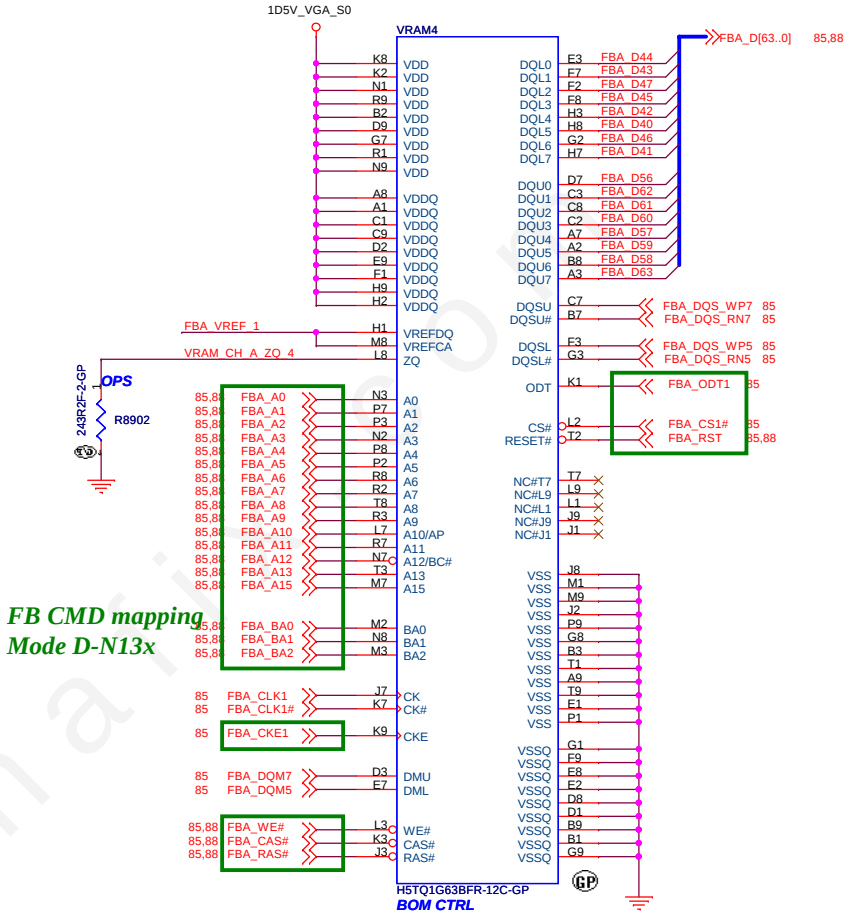

Combined Memory FBVDD/Q Decoupling DDR3×16 with Clamshell Layout
(DG-05587-001_v03_p.87_Table 23)

Capacitor	Type	Footprint	Population	Location
0.1uF	X7R	0402	4	Close to VRAM
1uF	X7R	0603	8	Close to VRAM

X7R (+/-15%、-55~125℃)
*Per clamshell pair

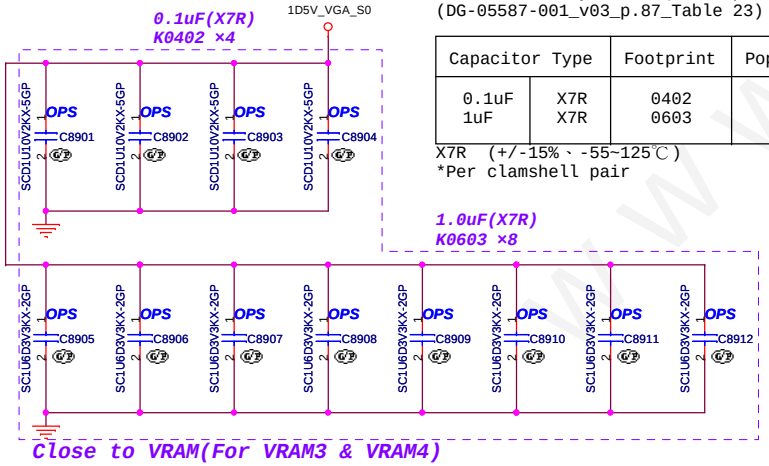

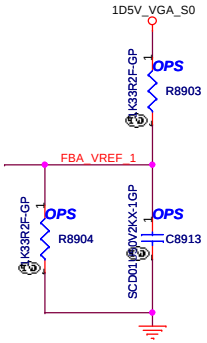

www.chinafix.com

<Core Design>
緯創資通 Wistron Corporation
21F, 88, Sec.1, Hsin Tai Wu Rd., Hsichih,
Taipei Hsien 221, Taiwan, R.O.C.

Title: CHANNEL-A_VRAM3,4 (2/4)

Size: A3 | Document Number: LA48 | Rev: SD

Date: Friday, January 06, 2012 | Sheet 89 of 103

VIDEO FRAME BUFFER PORT C

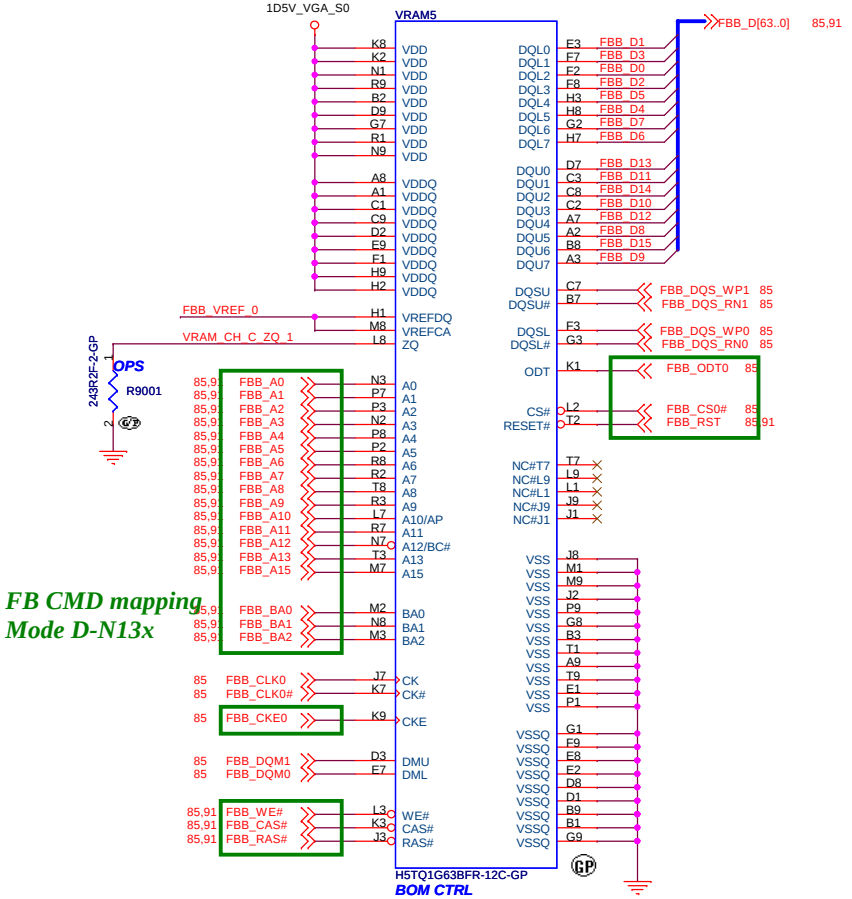

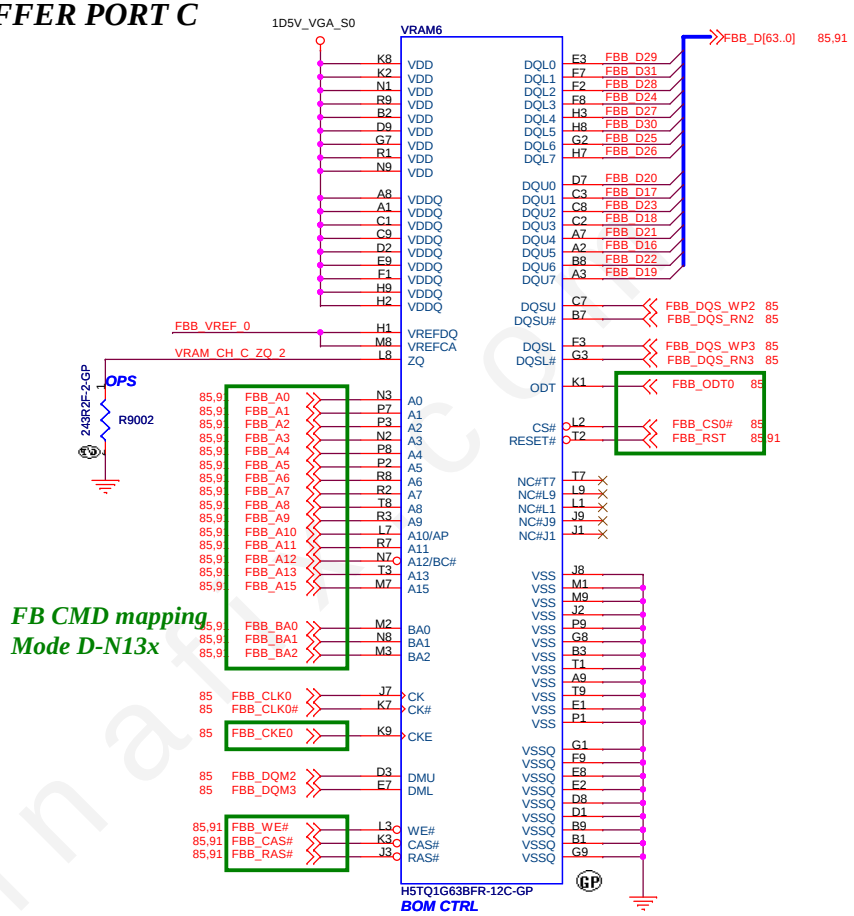

Combined Memory FBVDD/Q Decoupling DDR3×16 with Clamshell Layout
(DG-05587-001_v03_p.87_Table 23)

Capacitor	Type	Footprint	Population	Location
0.1uF	X7R	0402	4	Close to VRAM
1uF	X7R	0603	8	Close to VRAM

X7R (+/-15%、-55~125℃)
*Per clamshell pair

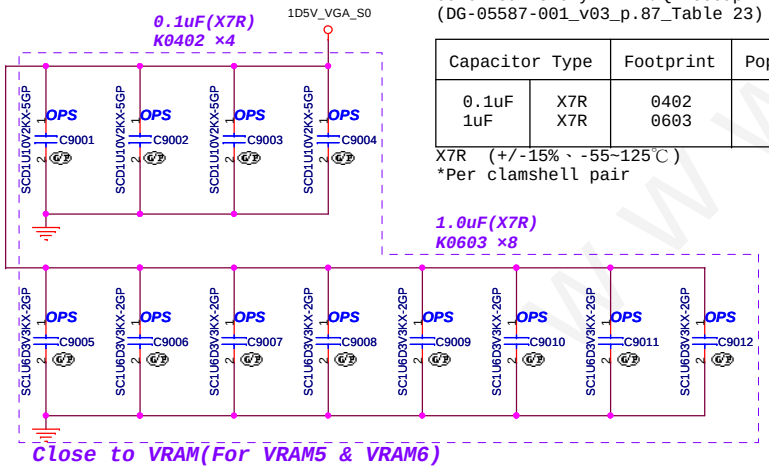

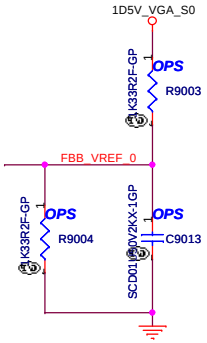

<Core Design>

緯創資通 Wistron Corporation
21F, 88, Sec.1, Hsin Tai Wu Rd., Hsichih,
Taipei Hsien 221, Taiwan, R.O.C.

Title: CHANNEL-C_VRAM5,6 (3/4)

Size: A3 | Document Number: LA48 | Rev: SD

Date: Friday, January 06, 2012 | Sheet 90 of 103

www.chinafix.com

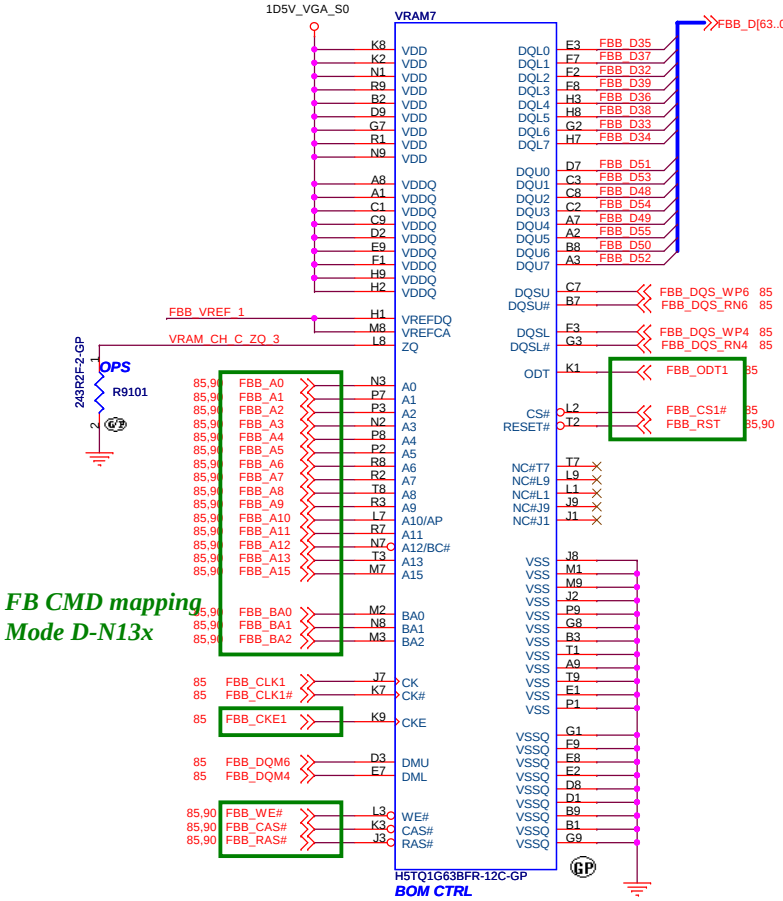

VIDEO FRAME BUFFER PORT C

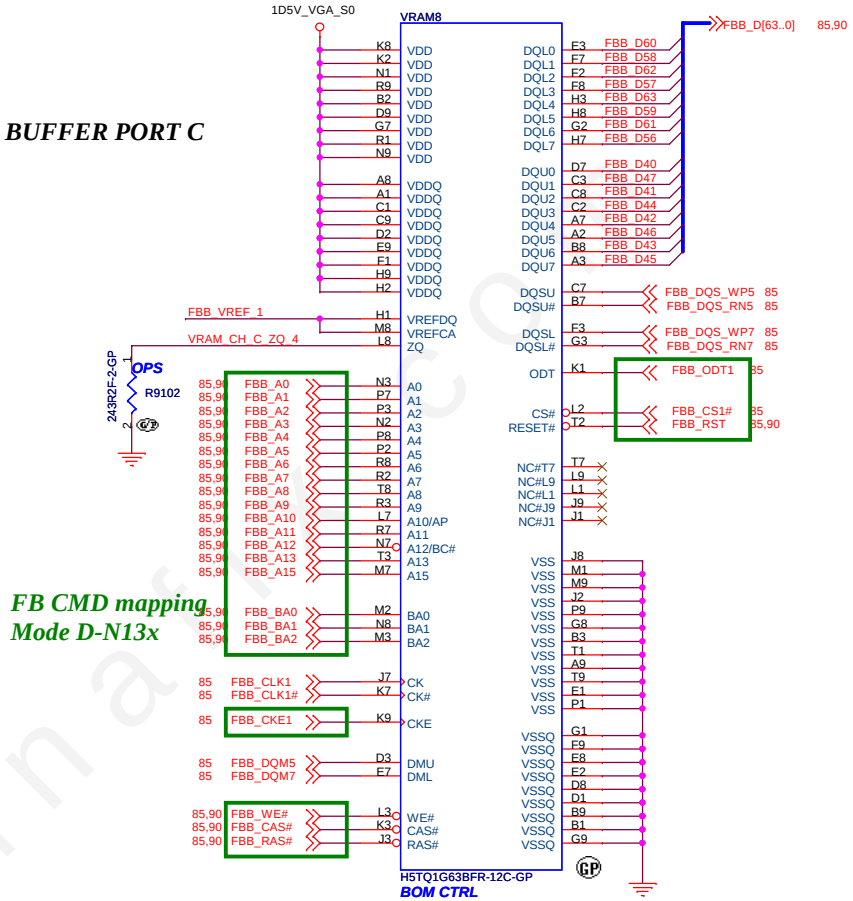

Combined Memory FBVDD/Q Decoupling DDR3×16 with Clamshell Layout
(DG-05587-001_v03_p.87_Table 23)

Capacitor	Type	Footprint	Population	Location
0.1uF	X7R	0402	4	Close to VRAM
1uF	X7R	0603	8	Close to VRAM

X7R (+/-15%、-55~125℃)
*Per clamshell pair

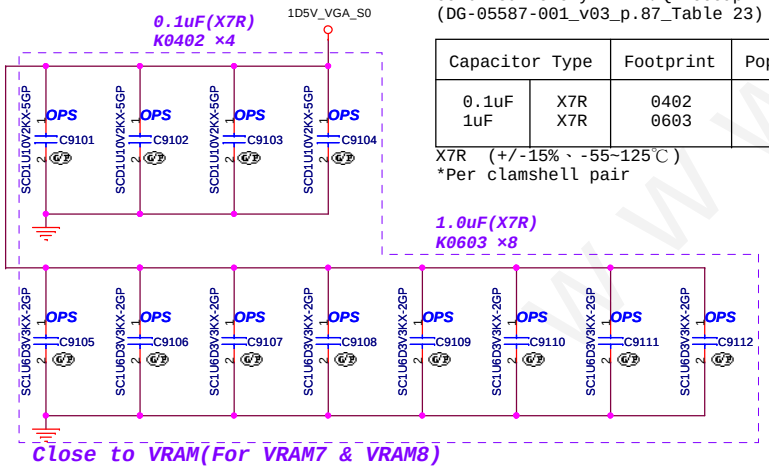

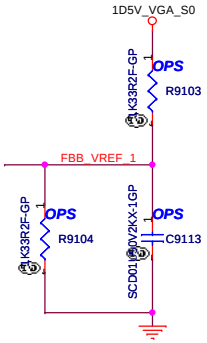

www.chinafdx.com

<Core Design>

Wistron Corporation
21F, 88, Sec.1, Hsin Tai Wu Rd., Hsichih,
Taipei Hsien 221, Taiwan, R.O.C.

Title: CHANNEL-C_VRAM7,8 (4/4)

Size: A3 | Document Number: LA48 | Rev: SD

Date: Friday, January 06, 2012 | Sheet 91 of 103

SSID = PWR.Plane.Regulator_GFX

	Main source	2nd source
PU9202	84.03606.037 FDMS3606S-GP-U	
PU9206	84.03606.037 FDMS3606S-GP-U	

BOM control

		N13P-GS 71.0N13P.00U	N13P-GL 71.0N13P.B0U	N13M-GS 71.0N13M.E0U	N13M-GE1 71.0N13M.C0U
NVVDD Boot Voltage		0.9V VID[6:0]=0110000	0.975V VID[6:0]=0101010	0.9V VID[6:0]=0110000	0.875V VID[6:0]0110010
NV_VID1	PR9215	DY	63.10334.1DL	DY	63.10334.1DL
	PR9230	63.10334.1DL	DY	63.10334.1DL	DY
NV_VID3	PR9217	DY	63.10334.1DL	DY	DY
	PR9232	63.10334.1DL	DY	63.10334.1DL	63.10334.1DL
NV_VID4	PR9218	63.10334.1DL	DY	63.10334.1DL	63.10334.1DL
	PR9233	DY	63.10334.1DL	DY	DY

Panasonic. 0.36uH 10*11.5*4
DCR=1.1mohm
Idc=17A, Isat=24A

Q1: Id=11A, Qg=10~14nC,
Rdson=7.5~9.8 mohm
Q2: Id=23A, Qg=27~38nC,
Rdson=1.7~2.1 mohm

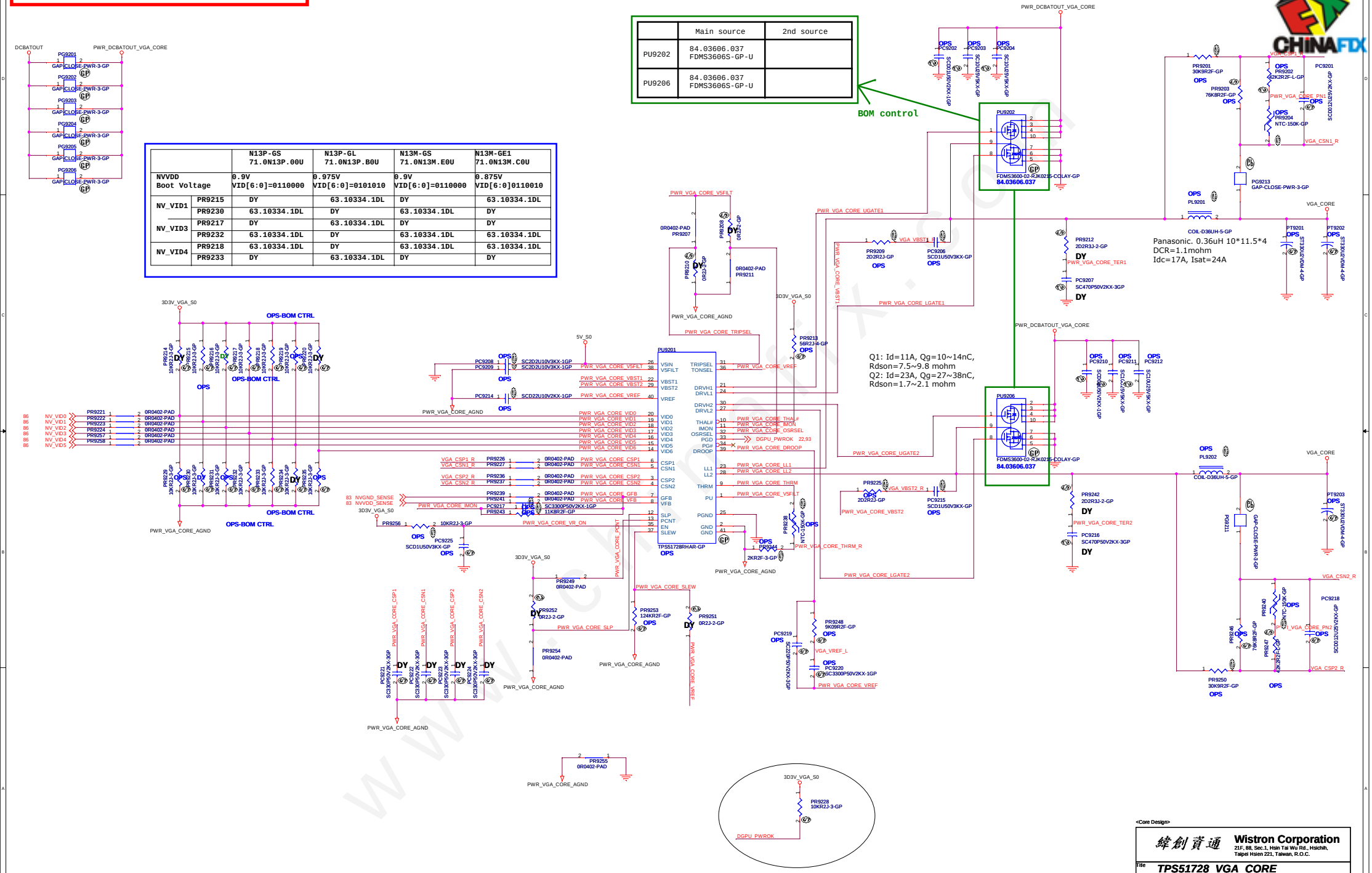

<Core Design>

緯創資通 **Wistron Corporation**
21F, 88, Sec.1, Hsin Tai Wu Rd., Hsichih,
Taipei Hsien 221, Taiwan, R.O.C.

Title	TPS51728_VGA_CORE		
Size	Document Number <Doc>		Rev SD
Date: Friday, January 06, 2012	Sheet 92 of 103		

+3VS to 3.3V_DELAY Transfer

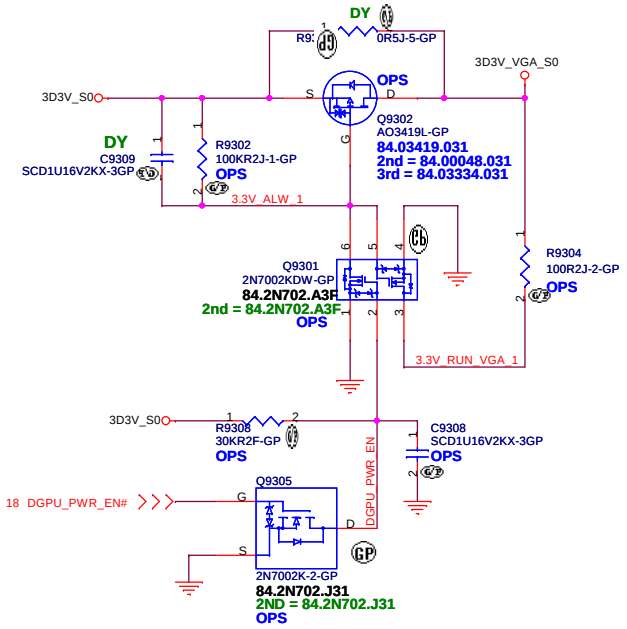

1D5V_VGA_S0

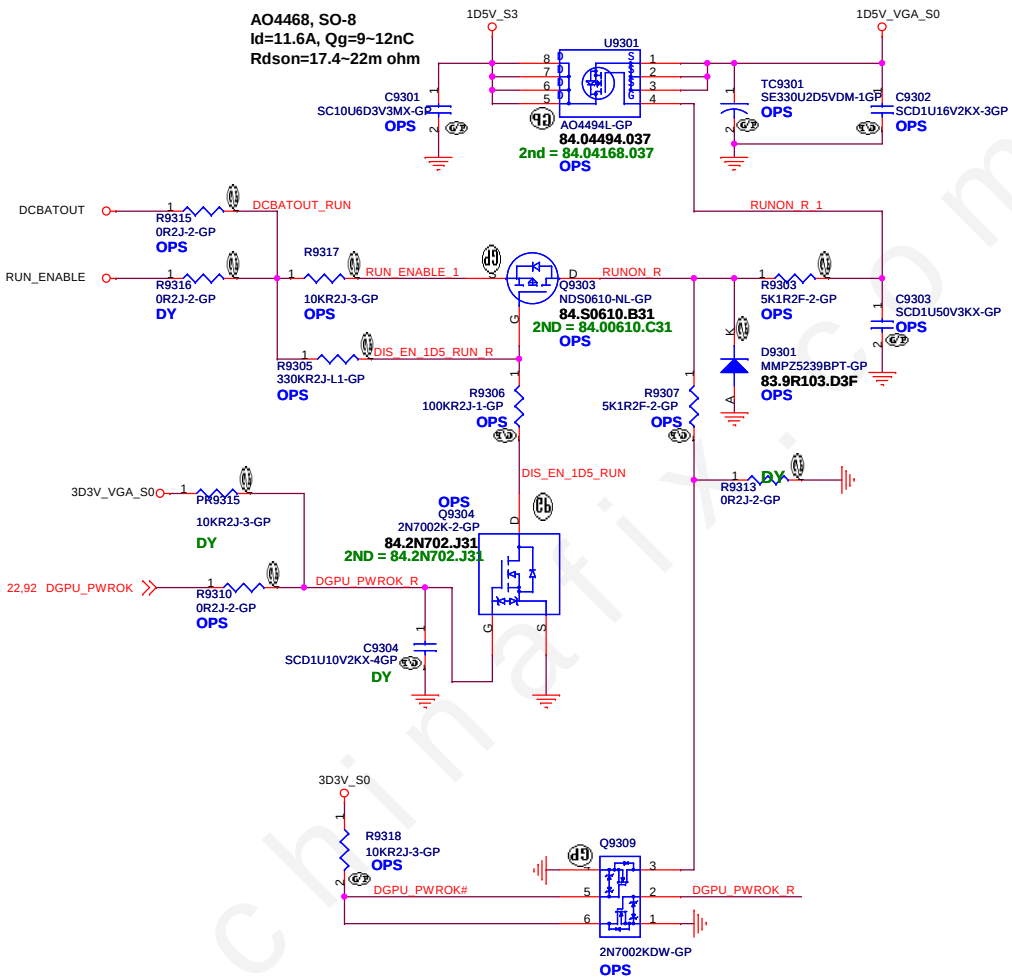

1.05V to 1.05V_VGA_S0 Transfer

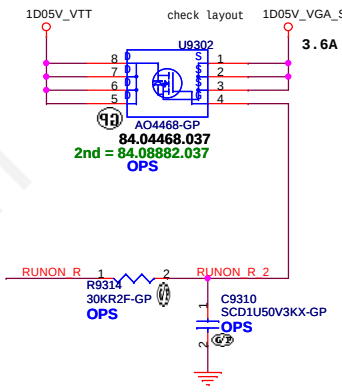

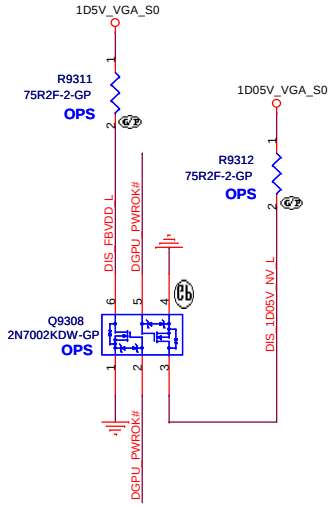

www.chinafix.com

<Core Design>

緯創資通	Wistron Corporation 21F, 88, Sec.1, Hsin Tai Wu Rd., Hsichih, Taipei Hsien 221, Taiwan, R.O.C.	
Title	DISCRETE VGA POWER	
Size A3	Document Number LA480	Rev SD
Date: Friday, January 06, 2012	Sheet 93 of 103	

BLANK

www.chinafix.com

<Core Design>

緯創資通
Wistron Corporation
21F,88,Sec.1,Hsin Tai Wu Rd.,Hsichih,
Taipei Hsien 221, Taiwan, R.O.C

Title	<Title>	
Size A4	Document Number LA480	Rev SD
Date: Friday, January 06, 2012	Sheet 94 of 103	

BLANK

www.chinafix.com

<Core Design>

緯創資通 Wistron Corporation
21F, 88, Sec.1, Hsin Tai Wu Rd., Hsichih,
Taipei Hsien 221, Taiwan, R.O.C.

Title	***Reserved***	
Size A4	Document Number **LA480**	Rev **SD**
Date: Friday, January 06, 2012	Sheet 95 of 103	

BLANK

www.chinafix.com

<Core Design>

緯創資通 Wistron Corporation
21F, 88, Sec.1, Hsin Tai Wu Rd., Hsichih,
Taipei Hsien 221, Taiwan, R.O.C.

Title	TOUCH PANEL	
Size A4	Document Number LA480	Rev SD
Date: Friday, January 06, 2012	Sheet 96 of 103	

CPU Plate

H14 HOLET157B276R134-GP ZZ.SCREW.091
H15 HOLET157B276R134-GP ZZ.SCREW.091
H16 HOLET157B276R134-GP ZZ.SCREW.091
H17 HOLET157B276R134-GP ZZ.SCREW.091

VGA Std-Off

H1 STF237R128H42-1-GP 34.4GD01.001
H2 STF237R128H42-1-GP 34.4GD01.001
H21 STF237R128H42-1-GP 34.4GD01.001

MINI PCIE

H18 STF256R89H178-GP 34.4B417.001

DCBATOUT: EC9729 SCD1U25V2KX-GP, EC9727 SCD1U25V2KX-GP, EC9728 SCD1U25V2KX-GP
VCCSA: EC9730 SC1KP50V2KX-1GP, EC9731 SCD1U25V2KX-GP, EC9732 SCD1U25V2KX-GP, EC9733 SCD1U25V2KX-GP

XDP_DBRESET# 5,19
H_CPUPWRGD 5,22
PLT_RST# 5,18,27,31,36,65,66,71,80,82,83

14" Structure boss

H3 HOLE256R115-GP ZZ.00PAD.D11
H4 HOLE256R115-GP ZZ.00PAD.D11
H5 HOLE315X315R91-S1-GP ZZ.00PAD.581
H7 HOLE355X355R111-S1-GP ZZ.00PAD.571
H8 HOLE335R115-GP ZZ.00PAD.D01
H10 HOLE237R95-GP ZZ.00PAD.921
H11 HOLE237R95-GP ZZ.00PAD.921
H12 HOLE335R115-GP ZZ.00PAD.D01
H13 HOLE237R95-GP ZZ.00PAD.921
H19 HOLE315R95-GP ZZ.00PAD.911

DCBATOUT: EC9705, EC9706, EC9707, EC9708, EC9709, EC9710, EC9711, EC9712, EC9713, EC9714 SCD1U25V2KX-GP
3D3V_S0_CAMERA: EC9715 SCD1U25V2KX-GP
3D3V_AUX_S5: EC9716 SCD1U25V2KX-GP
3D3V_AUX_KBC: EC9717 SCD1U25V2KX-GP
3D3V_VGA_S0: EC9718 SCD1U25V2KX-GP
ODD_PWR_5V: EC9719 SCD1U25V2KX-GP
VCC_CORE: EC9720, EC9721 SCD1U25V2KX-GP
5V_S5: EC9722, EC9723, EC9724 SCD1U25V2KX-GP

3D3V_S0: R9704 100R2J-2-GP → 3D3V_RUNPWR → Q9704 2N7002A-7-GP (PS_S3CNTRL)
5V_S0: R9705 100R2J-2-GP → 5V_RUNPWR → Q9705 2N7002A-7-GP (PS_S3CNTRL)

5V_USB2_S3: EC9725 SCD1U25V2KX-GP
5V_USB1_S3: EC9726 SCD1U25V2KX-GP
1D05V_VTT: R9701 100R2J-2-GP → VTT_RUNPWR → Q9701 2N7002A-7-GP (36,37 PS_S3CNTRL)

VCC_CORE: R9706 100R2J-2-GP → CORE_RUNPWR → Q9706 2N7002A-7-GP (PS_S3CNTRL)
VCC_GFXCORE: R9707 100R2J-2-GP → GFX_RUNPWR → Q9707 2N7002A-7-GP (PS_S3CNTRL)
VCCSA: R9709 100R2J-2-GP → 1D05V_RUNPWR → Q9709 2N7002A-7-GP (PS_S3CNTRL)
1D8V_S0: R9702 100R2J-2-GP → 1D8V_RUNPWR → Q9702 2N7002A-7-GP (PS_S3CNTRL)

AD+: EC9702, EC9703, EC9704 SCD1U25V2KX-GP

For Discharge

3D3V_S5: R9710 100KR2J-1-GP → Q9710 2N7002A-7-GP (19,27,46 PM_SLP_S4#)
1D5V_S3: R9711 100R2J-2-GP → 1D5V_RUNPWR → Q9711 2N7002A-7-GP (PM_SLP_S4#)

<Core Design>

緯創資通 Wistron Corporation
21F, 88, Sec.1, Hsin Tai Wu Rd., Hsichih, Taipei Hsien 221, Taiwan, R.O.C.

Title: UNUSED PARTS/EMI Capacitors
Size: A3 | Document Number: LA480 | Rev: SD
Date: Friday, January 06, 2012 | Sheet 97 of 103

www.chinafix.com

(Blanking)

www.chinafix.com

<Core Design>

緯創資通 Wistron Corporation
21F, 88, Sec.1, Hsin Tai Wu Rd., Hsichih,
Taipei Hsien 221, Taiwan, R.O.C.

Title	*Change History*	
Size A4	Document Number LA480	Rev SD
Date: Friday, January 06, 2012	Sheet 98 of 103	

Intel-Power Sequence

(S5-to-S0-to-S5)

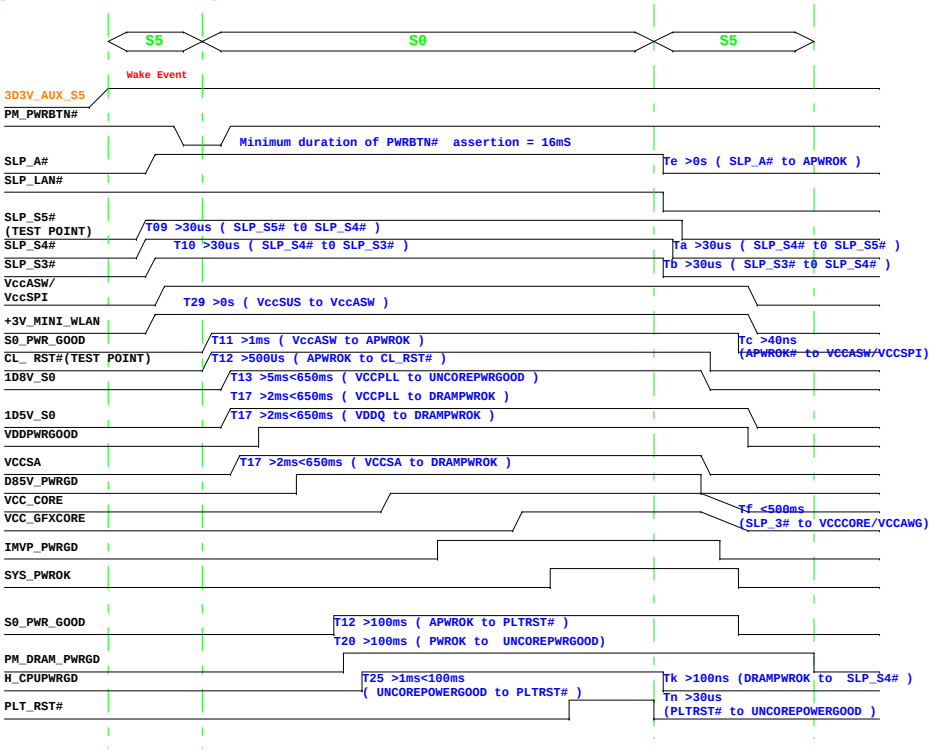

Intel PCH Pin Name	Main board PCH Pin Name
VccSUS (5V/3V)	3D3V_AUX_S5
PWRBTN#	PM_PWRBTN#
SLP_A#	SLP_A#
SLP_LAN#	SLP_LAN#
SLP_S5#	PM_SLP_S5#
SLP_S4#	PM_SLP_S4#
SLP_S3#	PM_SLP_S3#
VccASW/ VccSPI	VccASW/ VccSPI
Vcc_WLAN	+3V_MINI_WLAN
PWROK/APWROK	S0_PWR_GOOD
CL_ RST#	CL_ RST#
VCCPLL	1D8V_S0
VDDQ	1D5V_S0
VR_VDDQPWRGOOD	VDDPWRGOOD
VCCSA	VCCSA
IMVP7_VR_EN	D85V_PWRGD
VccCore	VCC_CORE
VccAXG	VCC_GFXCORE
IMVP7_PWRGD	IMVP_PWRGD
SYS_PWROK	SYS_PWROK
PWROK	S0_PWR_GOOD
DRAMPWROK	PM_DRAM_PWRGD
UNCOREPWRGOOD	H_CPUPWRGD
PLTRST#	PLT_RST#

(S3-to-S0-to-S3)

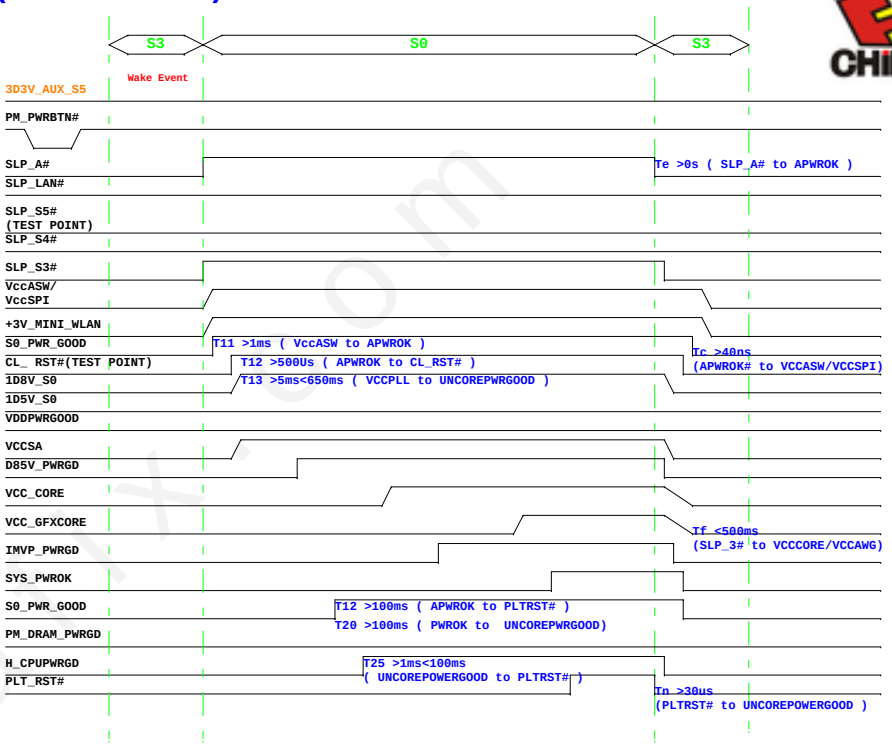

www.chinafix.com

<Core Design>

Wistron Corporation
21F, 88, Sec.1, Hsin Tai Wu Rd., Hsichih,
Taipei Hsien 221, Taiwan, R.O.C.

Title: Change History

Size: A2 | Document Number: LA480 | Rev: SD

Date: Friday, January 06, 2012 | Sheet 99 of 103

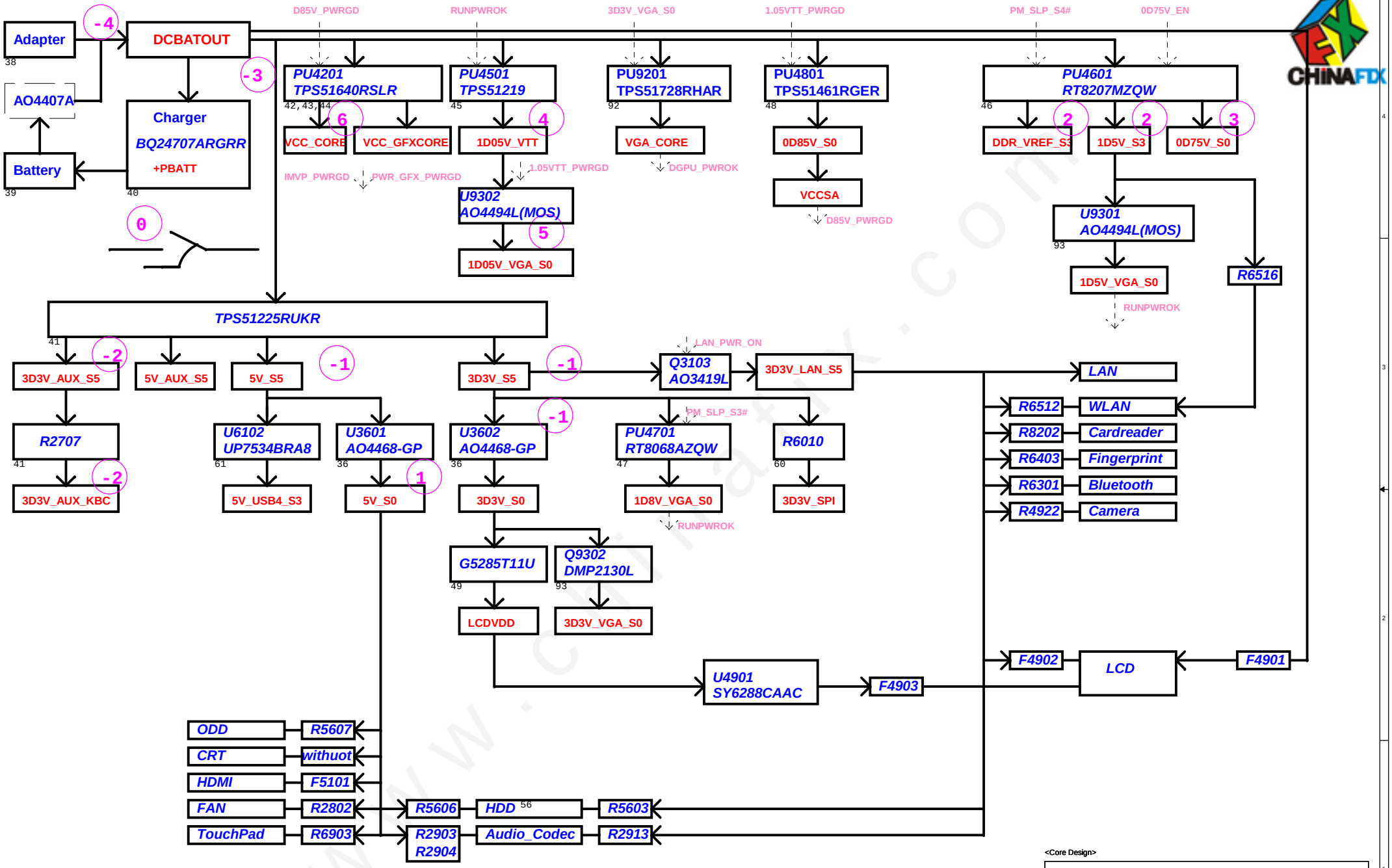

www.chinafix.com

<Core Design>

緯創資通	**Wistron Corporation** 21F, 88, Sec.1, Hsin Tai Wu Rd., Hsichih, Taipei Hsien 221, Taiwan, R.O.C.
Title	***Power Block Diagram***
Size A3	Document Number **LA480** Rev **SD**
Date: Friday, January 06, 2012	Sheet 100 of 103

PCH SMBus Block Diagram

KBC SMBus Block Diagram

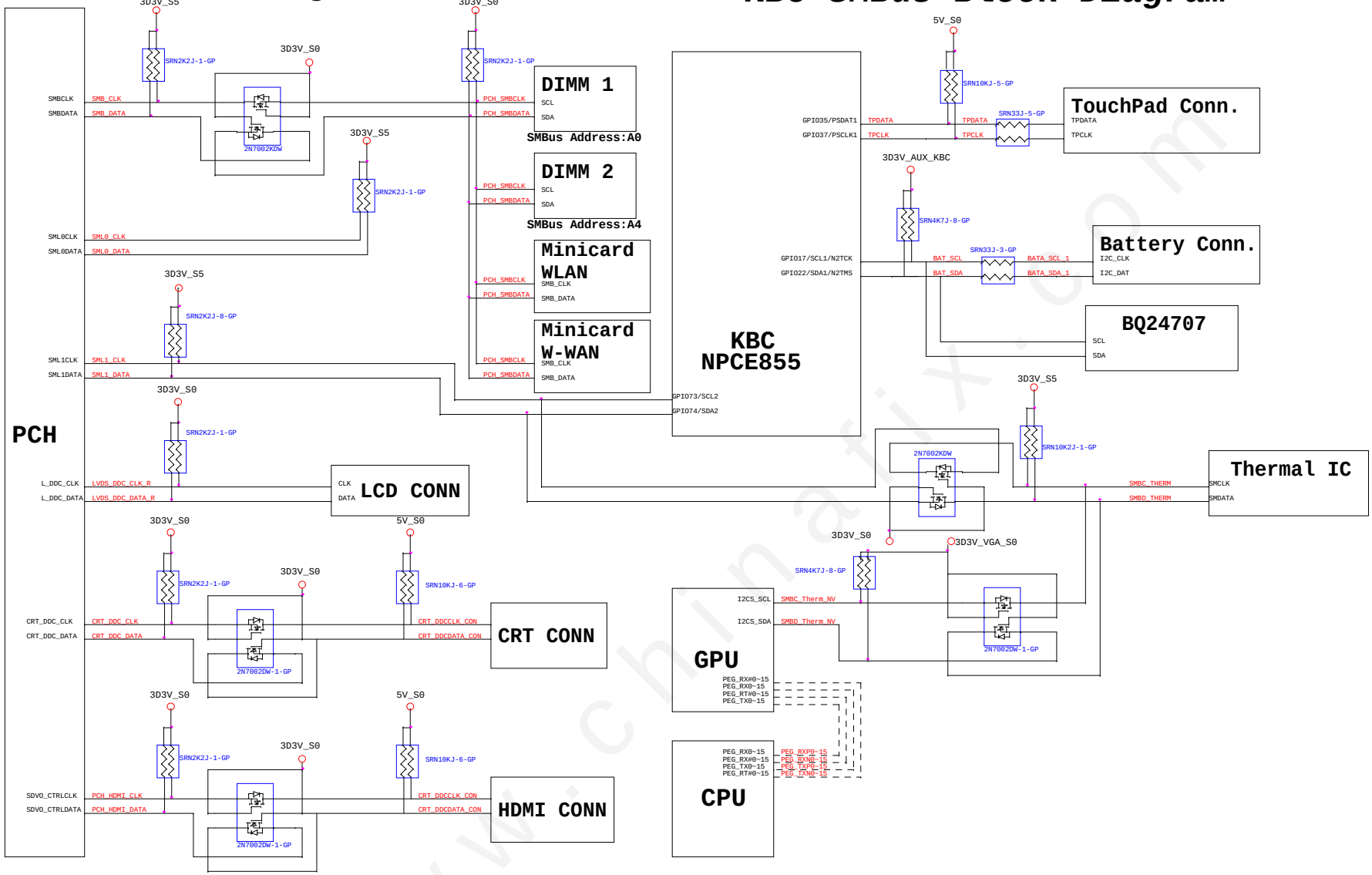

www.chinafix.com

<Core Design>

Wistron Corporation
21F, 88, Sec.1, Hsin Tai Wu Rd., Hsichih,
Taipei Hsien 221, Taiwan, R.O.C.

Title: SMBUS Block Diagram

Size	Document Number	Rev
A2	LA480	SD

Date: Friday, January 06, 2012 Sheet 101 of 103

Thermal Block Diagram

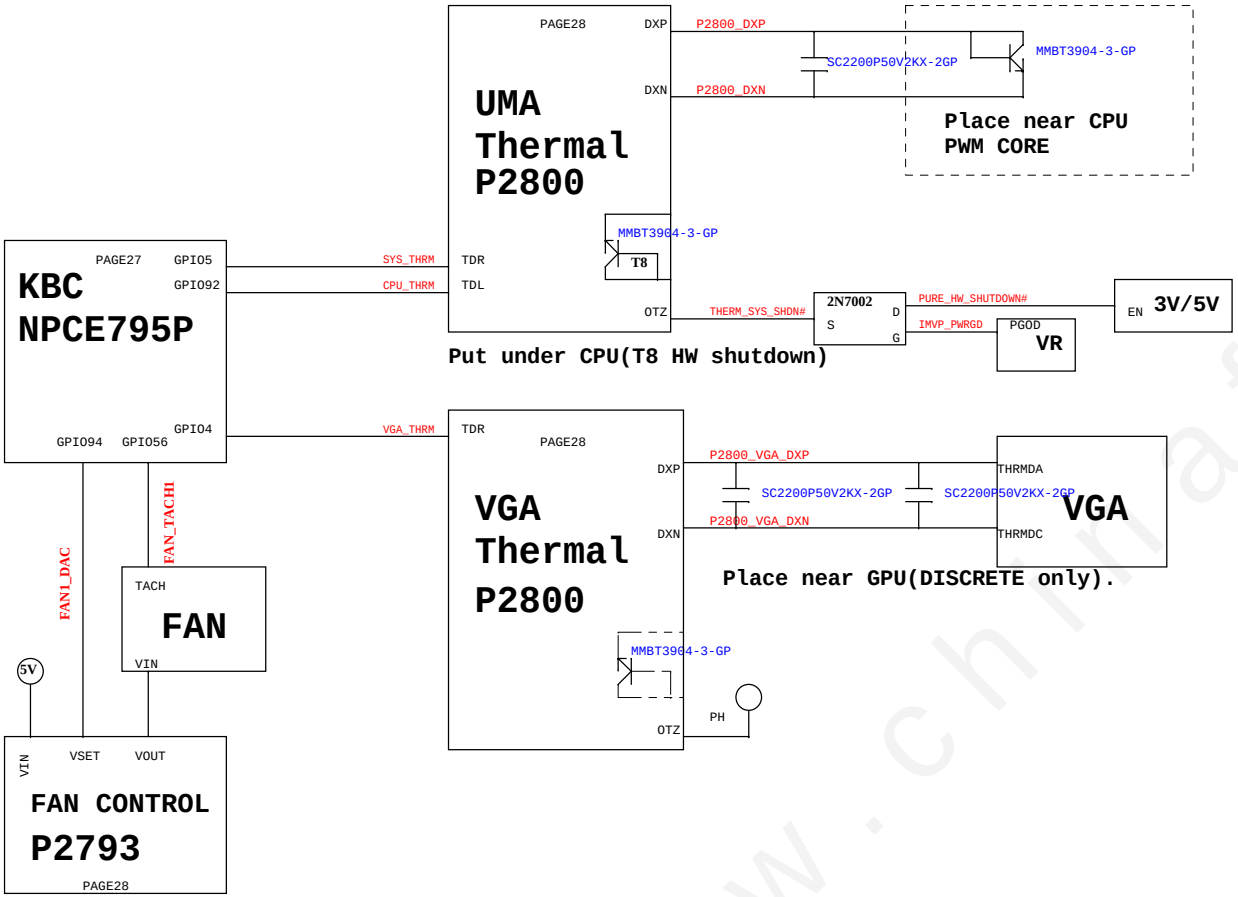

Audio Block Diagram

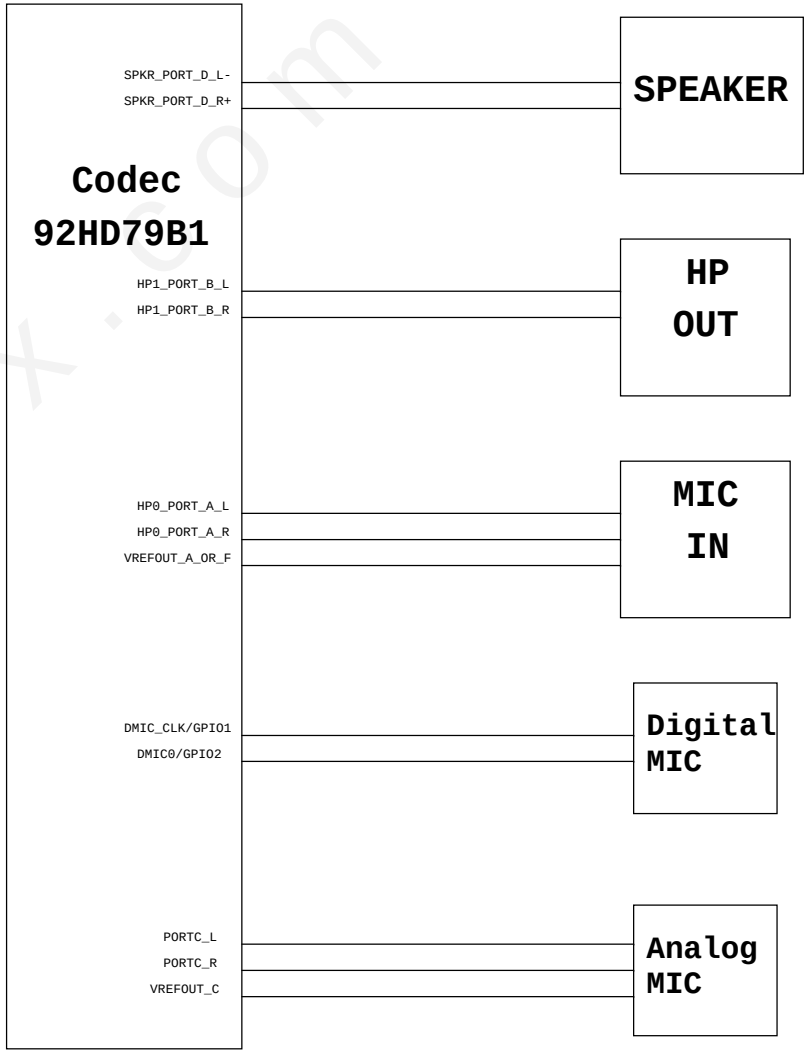

www.chinafix.com

<Core Design>

緯創資通	Wistron Corporation 21F, 88, Sec.1, Hsin Tai Wu Rd., Hsichih, Taipei Hsien 221, Taiwan, R.O.C.	
Title	Thermal/Audio Block Diagram	
Size: Custom	Document Number: LA480	Rev: SD
Date: Friday, January 06, 2012	Sheet 102 of 103	

(Blanking)

www.chinafix.com

<Core Design>

緯創資通 Wistron Corporation
21F, 88, Sec.1, Hsin Tai Wu Rd., Hsichih,
Taipei Hsien 221, Taiwan, R.O.C.

Title: *Change History*

Size	Document Number	Rev
A4	LA480	SD

Date: Friday, January 06, 2012 Sheet 103 of 103