QL6 BLOCK DIAGRAM

01

PCB STACK UP

8L

- LAYER 1 : TOP
- LAYER 2 : SGND
- LAYER 3 : IN1
- LAYER 4 : SGND
- LAYER 5 : SVCC
- LAYER 6 : IN2
- LAYER 7 : SGND
- LAYER 8 : BOT

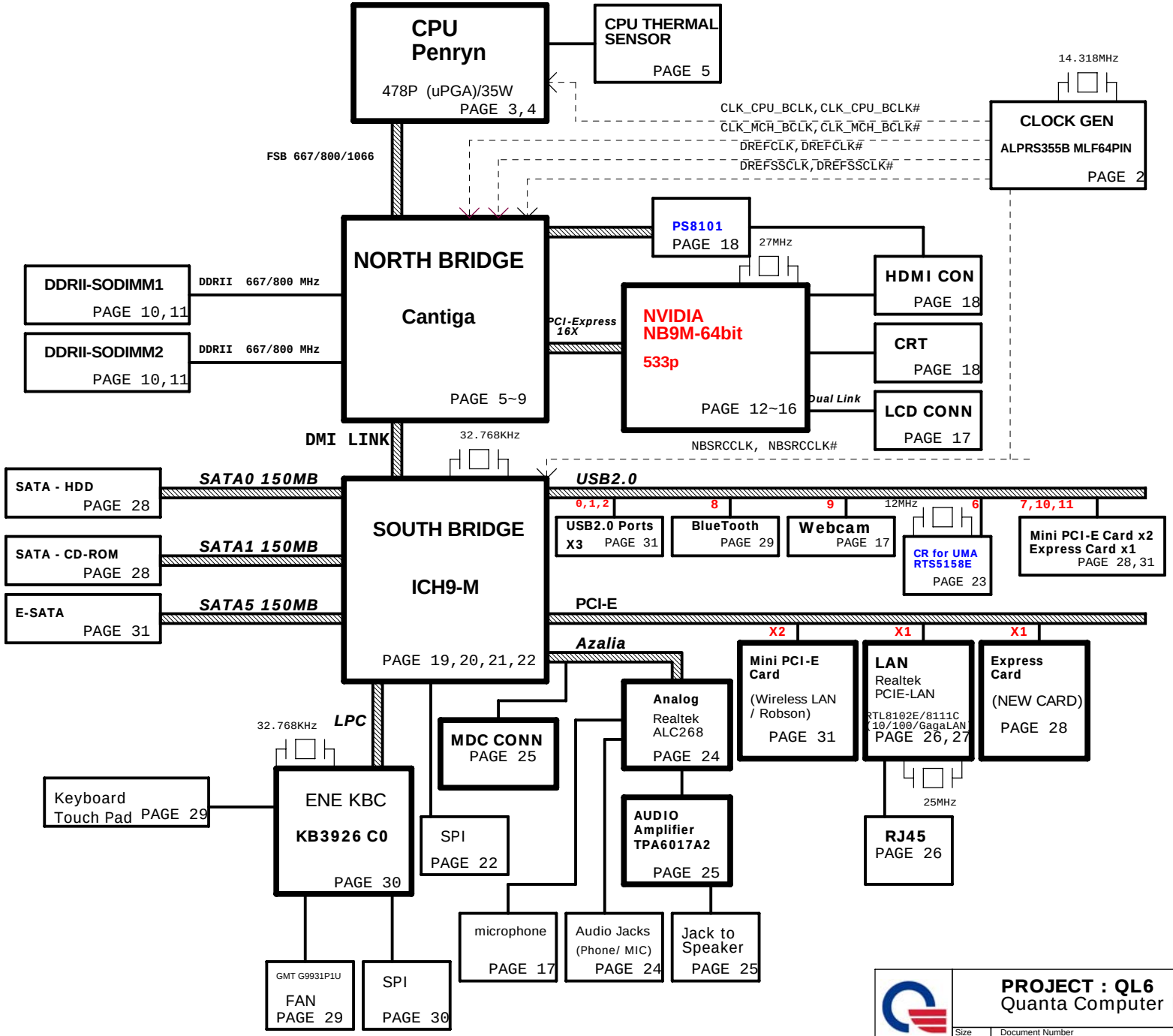

SYSTEM CHARGER(ISL6251AHAZ-T)	PAGE 32
SYSTEM POWER ISL6237IRZ-T	PAGE 33
DDR II SMDDR_VTERM 1.8V/1.8VSUS(TPS51116REGR)	PAGE 37
VCCP +1.5V AND GMCH 1.05V(RT8204)	PAGE 34
VGACORE(1.025V)Oz8118	PAGE 36
CPU CORE ISL6266A	PAGE 35

NB5

PROJECT : QL6
Quanta Computer Inc.

Size	Document Number	Rev
Custom	Block Diagram	4A

Date: Thursday, June 05, 2008 | Sheet 1 of 40

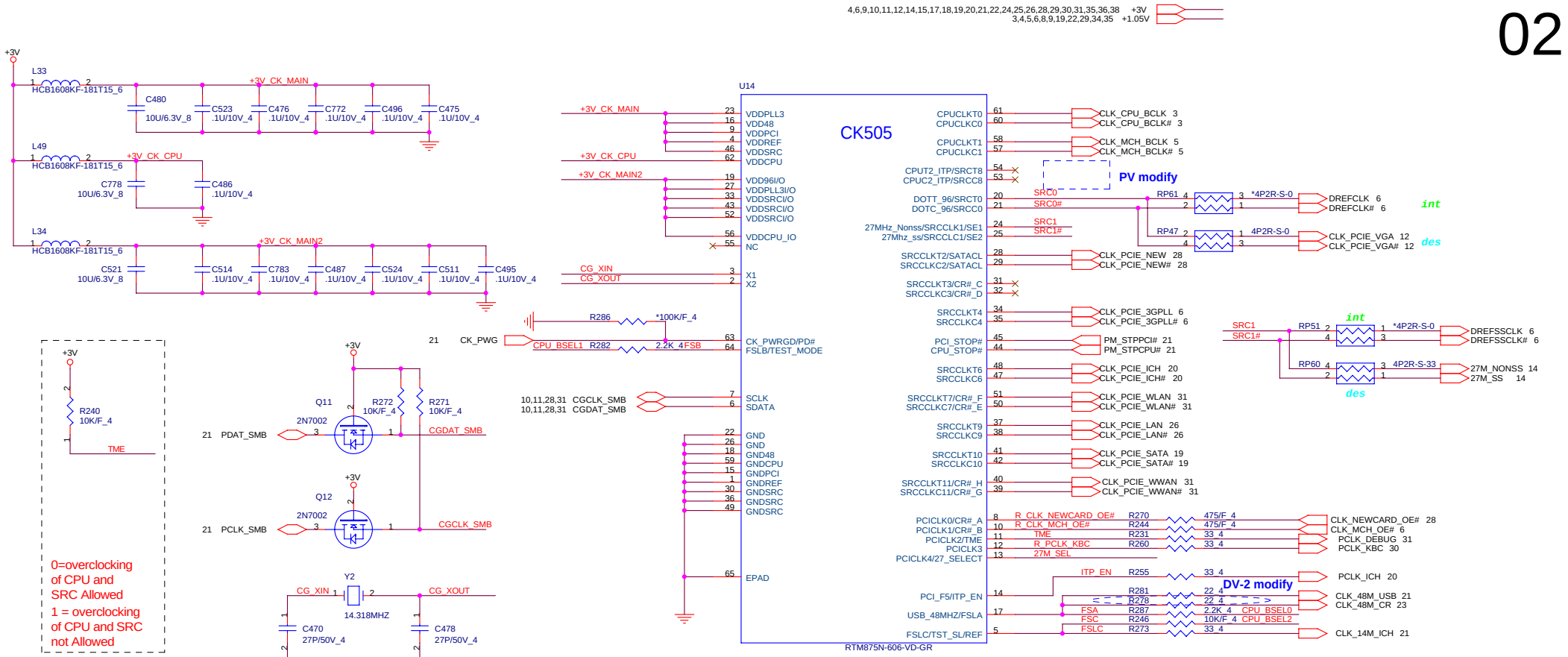

CK505 QFN64

ICS	ICS9LPRS355BKLF	ALPRS355000
Silego	SLG8SP513VTR	AL8SP513000
Realtek	RTM875N-606-VD-GR	AL000875000

27M_SEL PIN13	PIN20	PIN21	PIN24	PIN25
0=UMA	DOT96T	DOT96C	SRCT1/LCDT_100	SRCT1/LCDT_100
1 = External VGA	SRCT0	SRCC0	27Mout-NSS	27Mout-SS

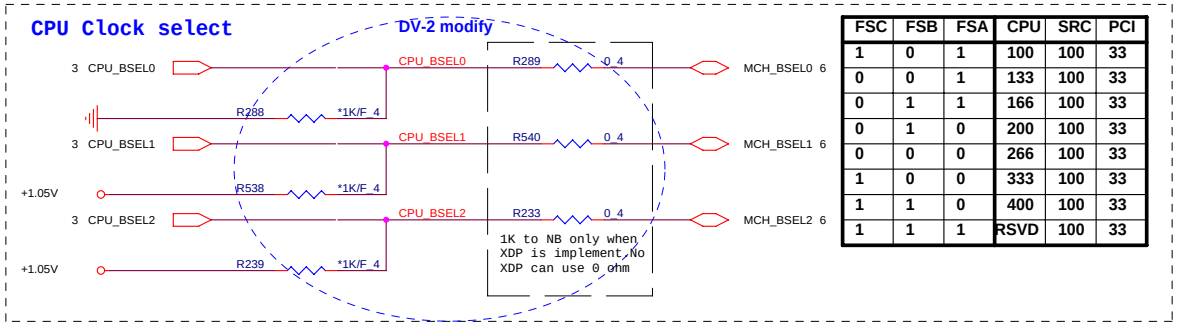

FSC	FSB	FSA	CPU	SRC	PCI
1	0	1	100	100	33
0	0	1	133	100	33
0	1	1	166	100	33
0	1	0	200	100	33
0	0	0	266	100	33
1	0	0	333	100	33
1	1	0	400	100	33
1	1	1	RSVD	100	33

for EMI

PROJECT : QL6
Quanta Computer Inc.

NB5

Size	Document Number	Rev
Custom	Clock Generator	4A

Date: Thursday, June 05, 2008 Sheet 2 of 40

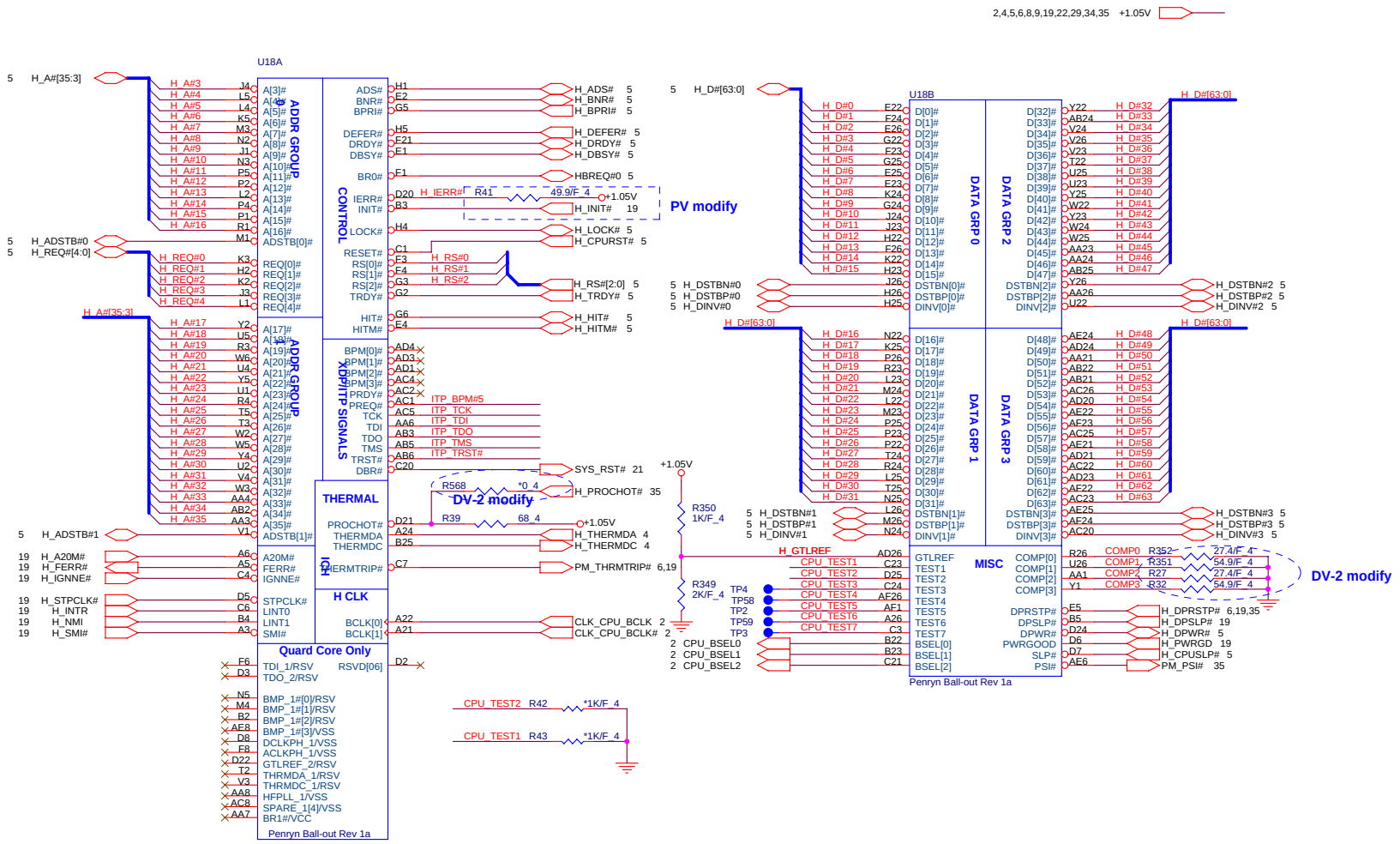

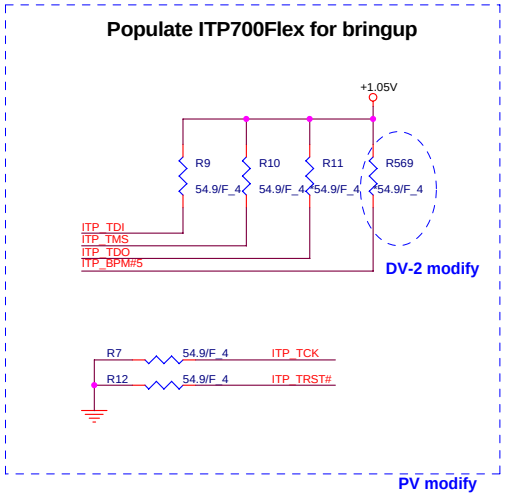

NB5

PROJECT : QL6
Quanta Computer Inc.

Size	Document Number	Rev
Custom	**Penryn 1/2**	4A

Date: Thursday, June 05, 2008 | Sheet 3 of 40

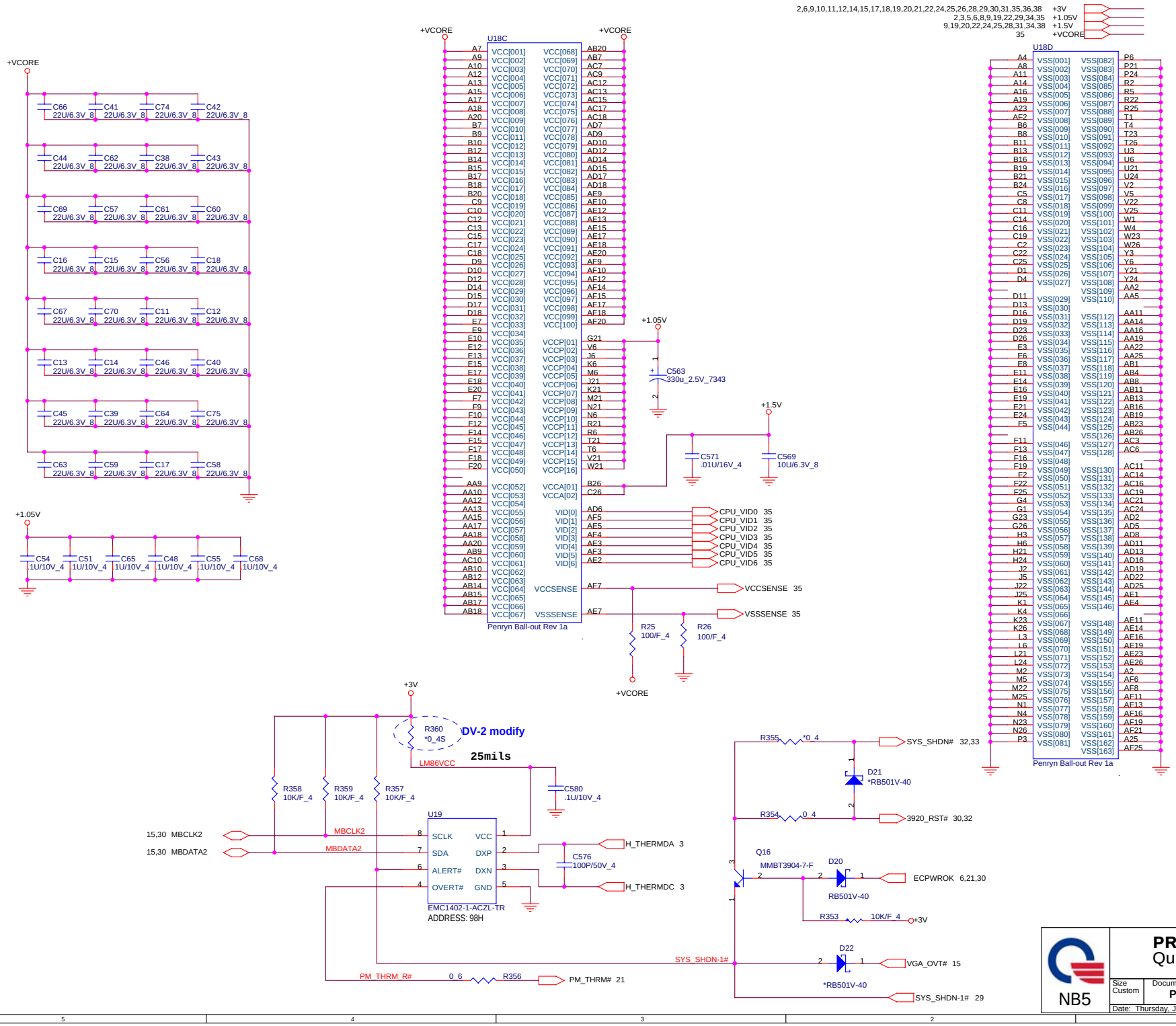

NB5

PROJECT : QL6
Quanta Computer Inc.

Size	Document Number	Rev
Custom	**Penryn & TH Monitor 2/2**	4A

Date: Thursday, June 05, 2008 | Sheet 4 of 40

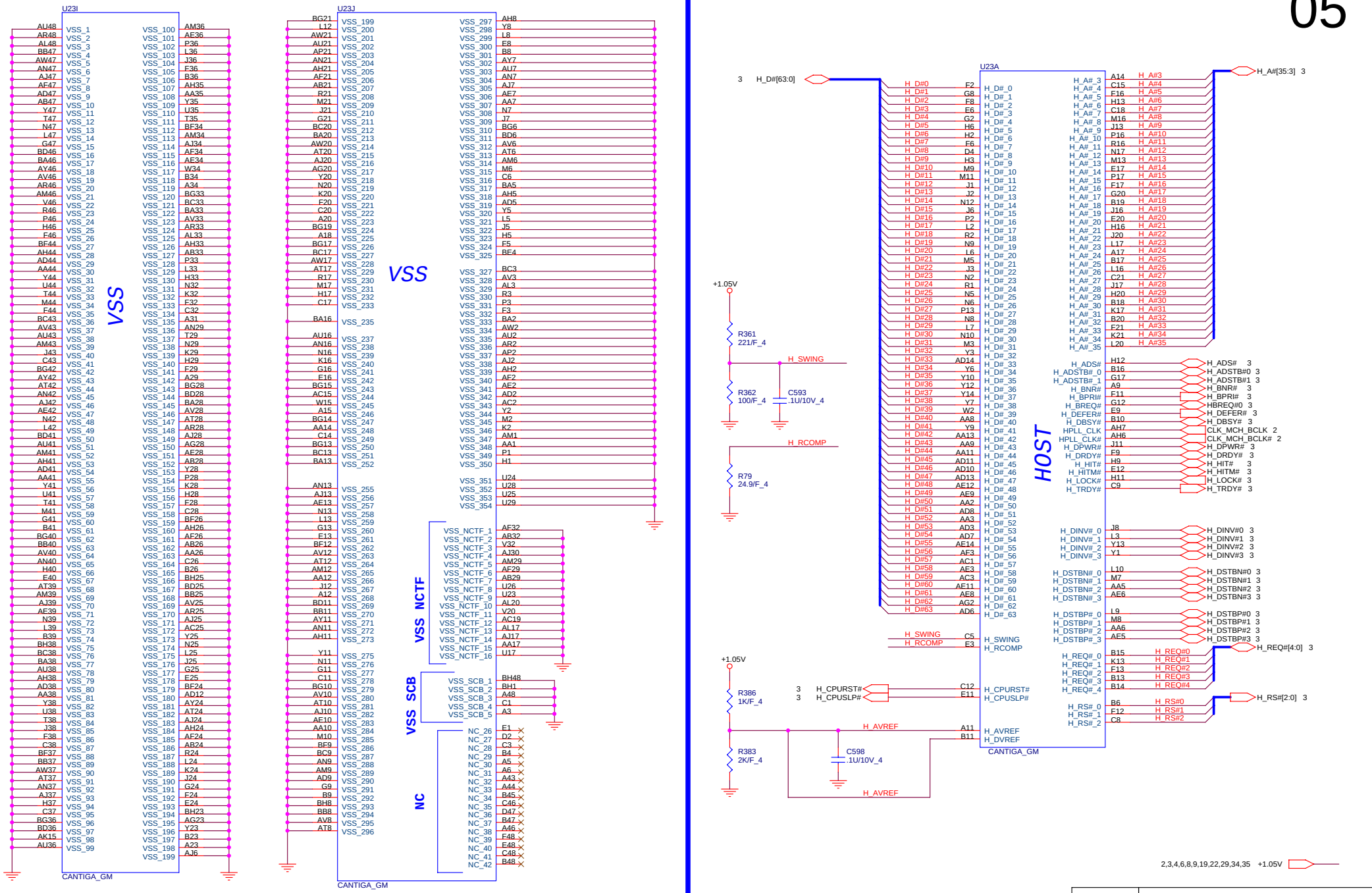
05
U23I
VSS
CANTIGA_GM
U23J
VSS
VSS_NCTF
VSS_SCB
NC
CANTIGA_GM
U23A
HOST
CANTIGA_GM
H_D#[63:0]
H_A#[35:3]
H_REQ#[4:0]
H_RS#[2:0]
+1.05V
R361 221/F_4
R362 100/F_4
C593 .1U/10V_4
R79 24.9/F_4
R386 1K/F_4
R383 2K/F_4
C598 .1U/10V_4
H_SWING
H_RCOMP
H_CPURST#
H_CPUSLP#
H_AVREF
H_DVREF
H_ADS#
H_ADSTB#_0
H_ADSTB#_1
H_BNR#
H_BPRI#
H_BREQ#
H_DEFER#
H_DBSY#
HPLL_CLK
HPLL_CLK#
H_DPWR#
H_DRDY#
H_HIT#
H_HITM#
H_LOCK#
H_TRDY#
CLK_MCH_BCLK
CLK_MCH_BCLK#
H_DINV#_0
H_DINV#_1
H_DINV#_2
H_DINV#_3
H_DSTBN#_0
H_DSTBN#_1
H_DSTBN#_2
H_DSTBN#_3
H_DSTBP#_0
H_DSTBP#_1
H_DSTBP#_2
H_DSTBP#_3
H_REQ#_0
H_REQ#_1
H_REQ#_2
H_REQ#_3
H_REQ#_4
H_RS#_0
H_RS#_1
H_RS#_2
2,3,4,6,8,9,19,22,29,34,35 +1.05V
NB5
PROJECT : QL6
Quanta Computer Inc.
Size Custom
Document Number
Cantiga Host & VSS 1/5
Rev 4A
Date: Thursday, June 05, 2008
Sheet 5 of 40

MCH_CFG_5 DMIx2 selection

Low: DMIx2
High: DMIx4 (Default)
MCH_CFG_16 FSB Dynamic ODT

Low: Dynamic ODT disabled
High: Dynamic ODT enabled (Default)
MCH_CFG_9 PCI Express Graphic Lane

Low: Reverse Lane
High: Normal operation(Default)
MCH_CFG_19 DMI Lane Reversal

MCH_CFG_6 iTPM Host Interface

Low: iTPM Host Interface enabled
High: iTPM Host Interface disabled (Default)
MCH_CFG_7 Intel (R) Management Engine Crypto

Low: Intel (R) Management Engine Crypto
TLS cipher suite with no confidentiality
High: Intel (R) Management Engine Crypto
TLS cipher suite with no confidentiality (Default)
MCH_CFG_10 PCIe Lookback Enable

Low: Enabled
High: Disabled (Default)
MCH_CFG_12/13 XOR/ALLZ/CLOCK Un-gating

MCH_CFG_13	MCH_CFG_12	Configuration
0	0	Reserved
1	0	XOR Mode enabled
0	1	All-Z Mode enabled
1	1	Normal operation (Default)

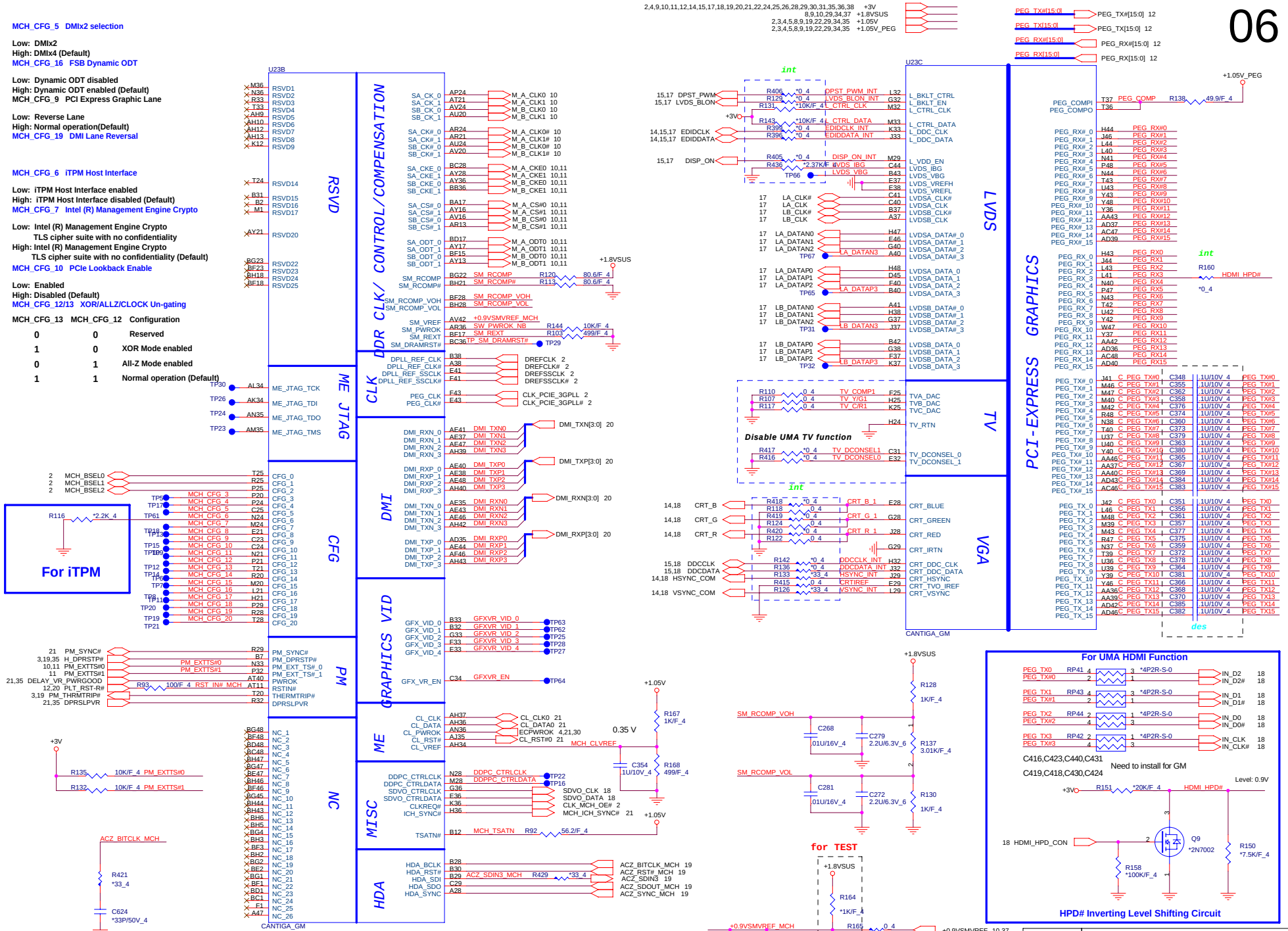

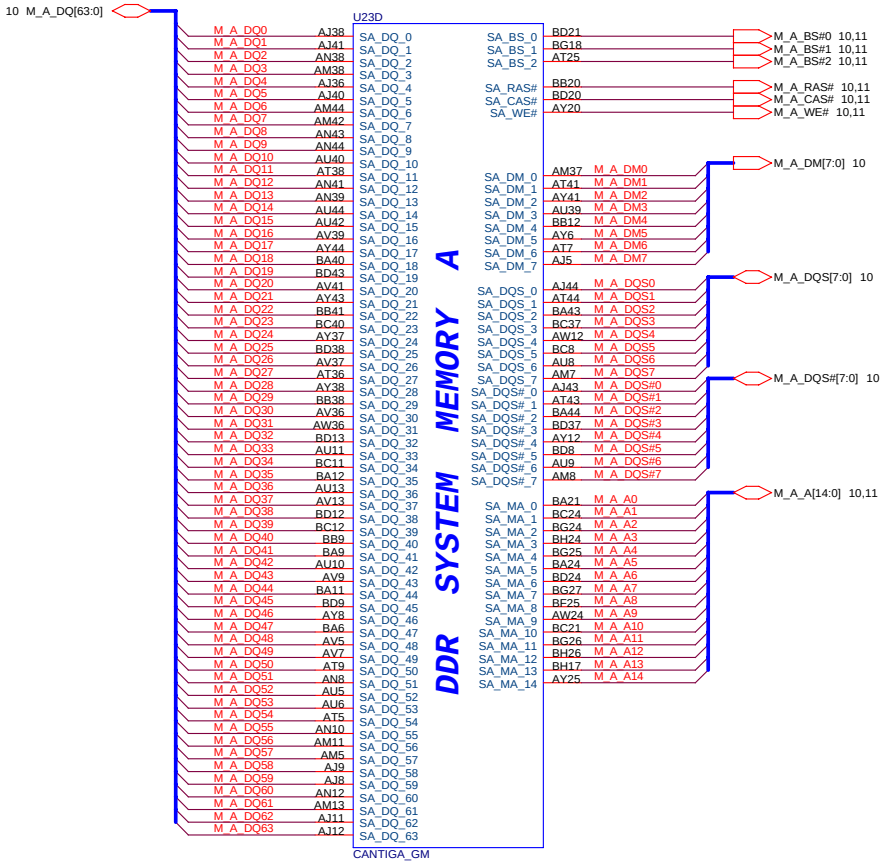

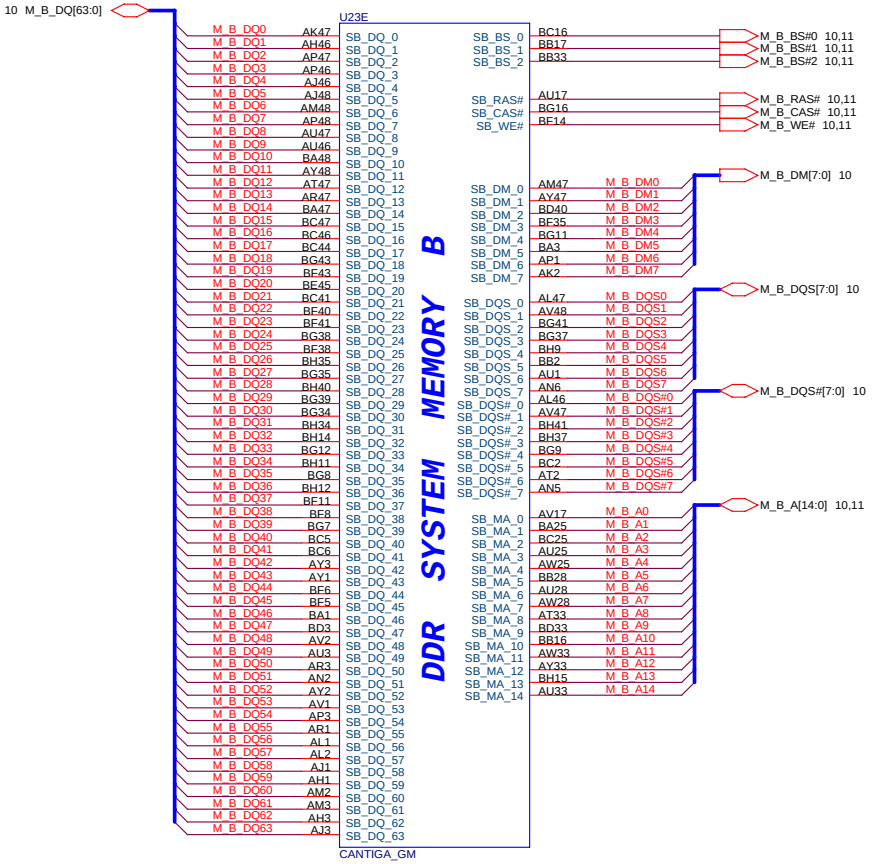

PROJECT : QL6
Quanta Computer Inc.

NB5

Size	Document Number	Rev
Custom	**Cantiga DDR2 3/5**	4A

Date: Thursday, June 05, 2008 | Sheet 7 of 40

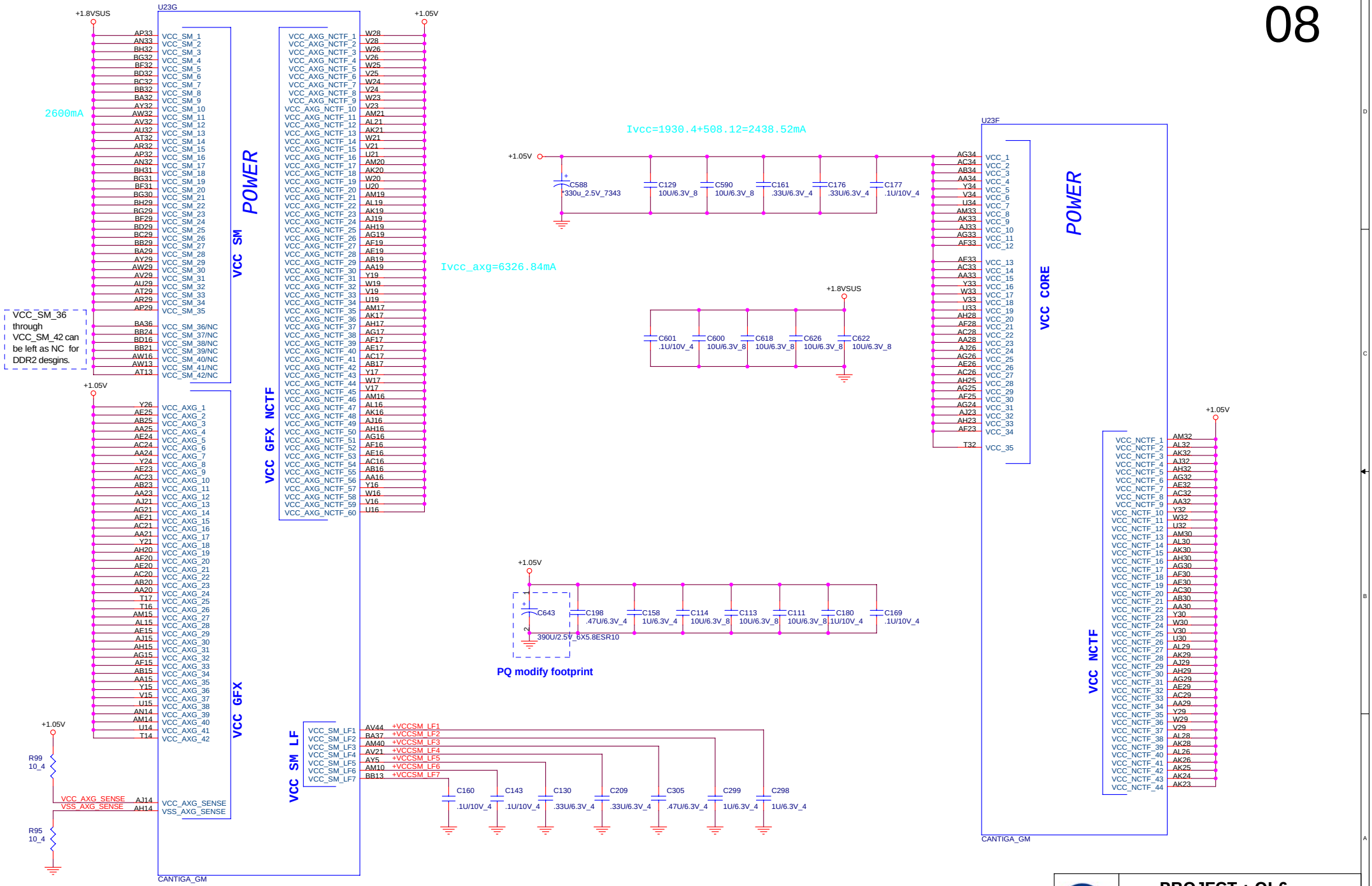

PROJECT : QL6
Quanta Computer Inc.

NB5

Size	Document Number	Rev
Custom	Cantiga Vcc 4/5	4A

Date: Thursday, June 05, 2008 | Sheet 8 of 40

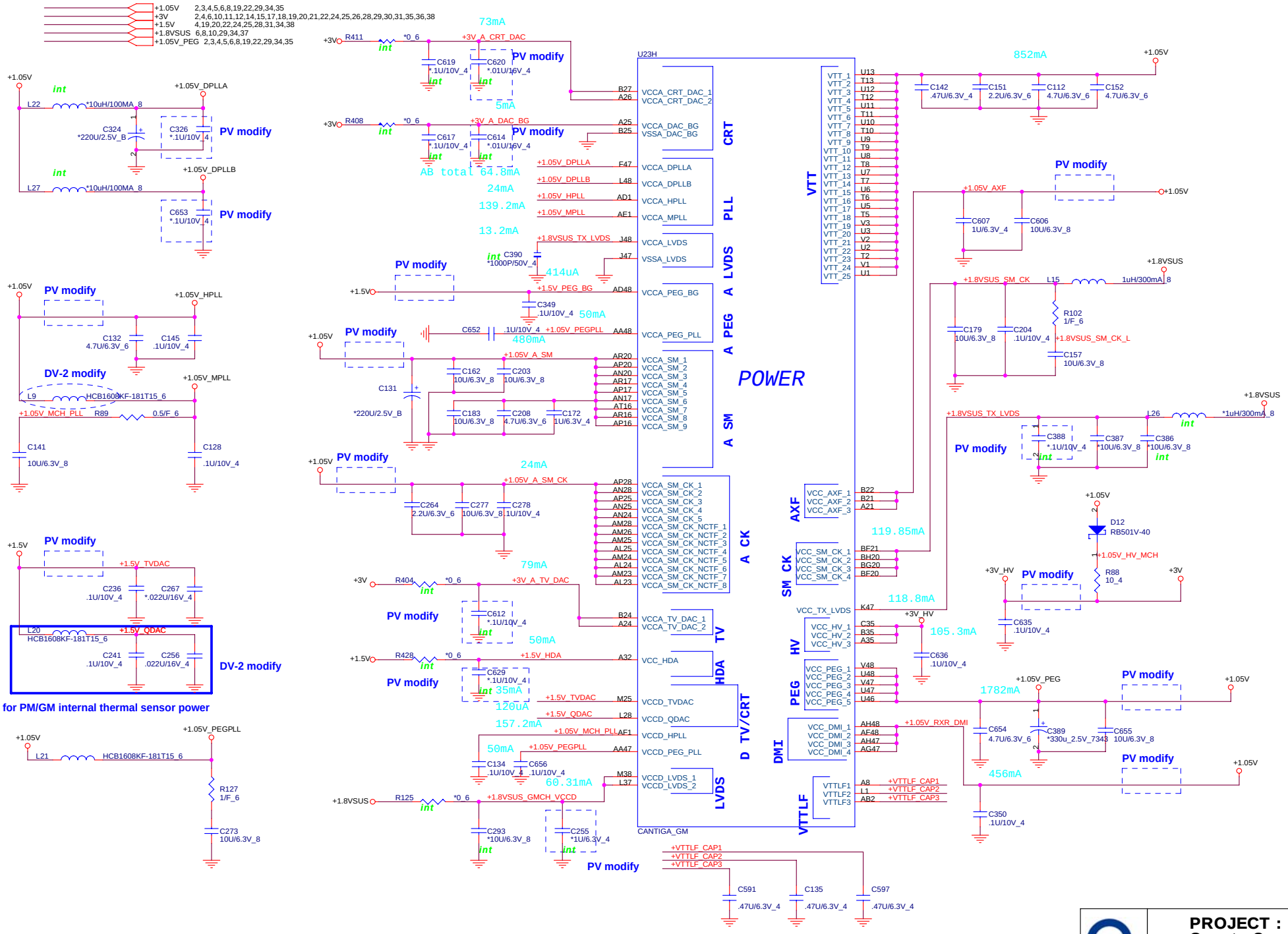

NB5	**PROJECT : QL6** Quanta Computer Inc.
Size Custom	Document Number **Cantiga Power 5/5**
Rev 4A	
Date: Thursday, June 05, 2008	Sheet 9 of 40

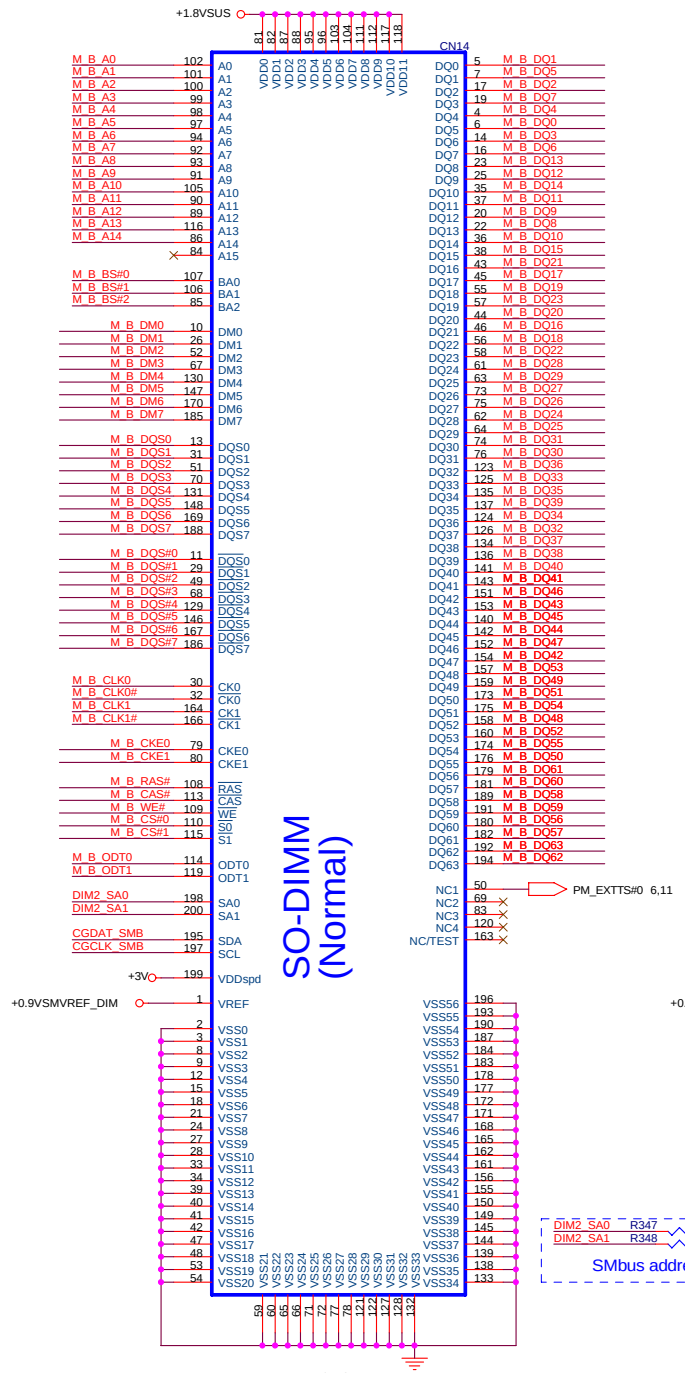

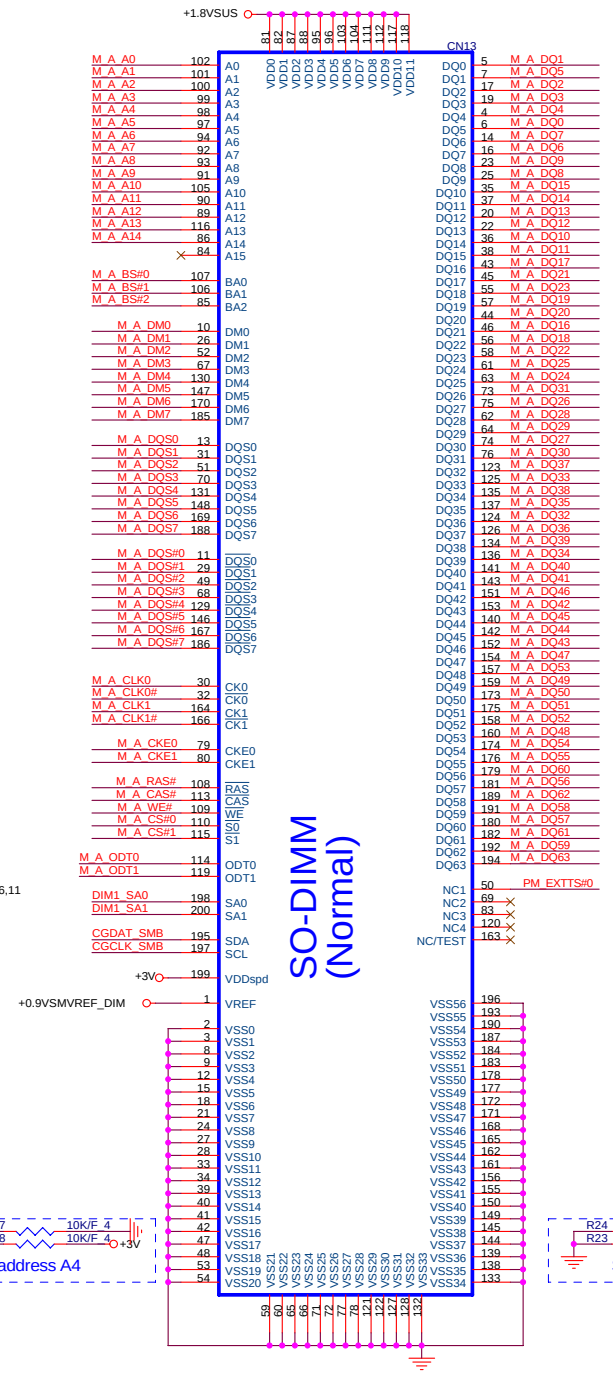

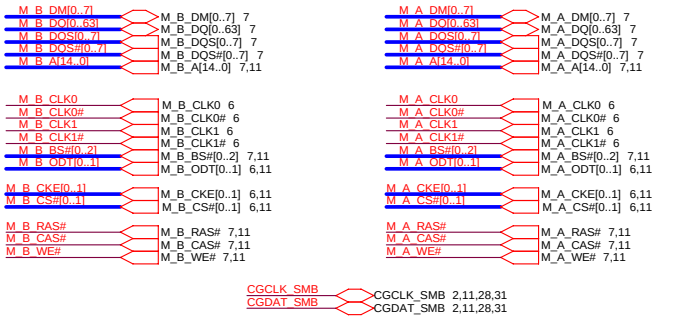

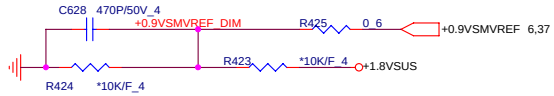

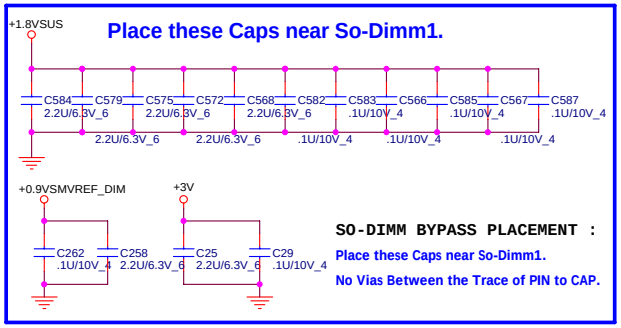

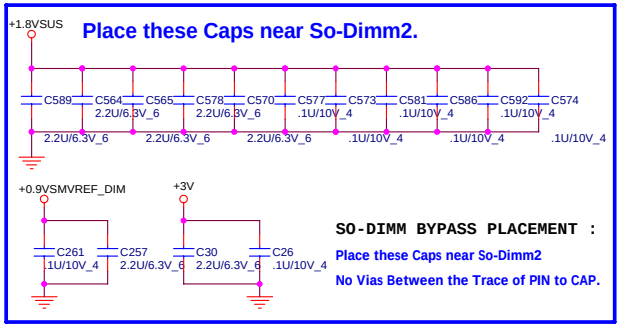

6,8,9,29,34,37 +1.8VSUS
2,4,6,9,11,12,14,15,17,18,19,20,21,22,24,25,26,28,29,30,31,35,36,38 +3V

NB5

PROJECT : QL6
Quanta Computer Inc.

Size	Document Number	Rev
Custom	DDR2 DIMM	4A

Date: Thursday, June 05, 2008 | Sheet 10 of 40

DDRII DUAL CHANNEL A,B.

DDRII A CHANNEL

DDRII B CHANNEL

Layout note: Place one cap close to every 2 pullup resistors terminated to SMDDR_VTERM

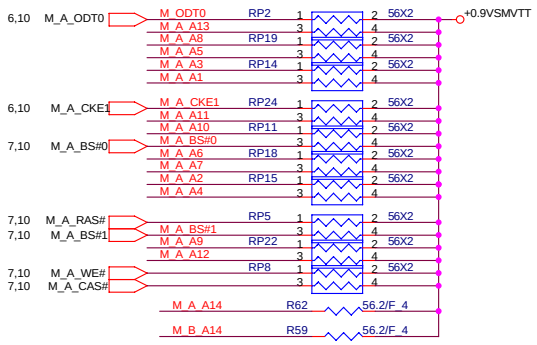

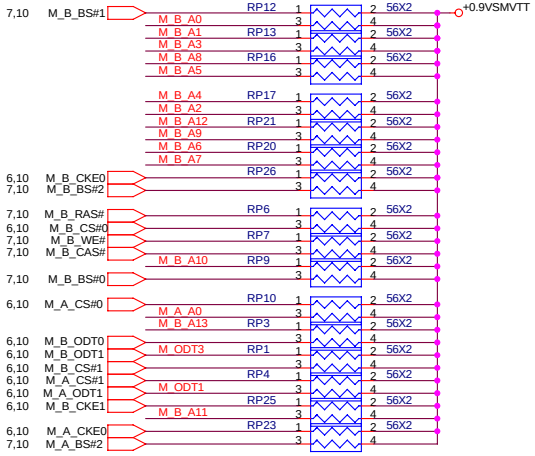

M_B_A[14..0] — M_B_A[14..0] 7,10

M_A_A[14..0] — M_A_A[14..0] 7,10

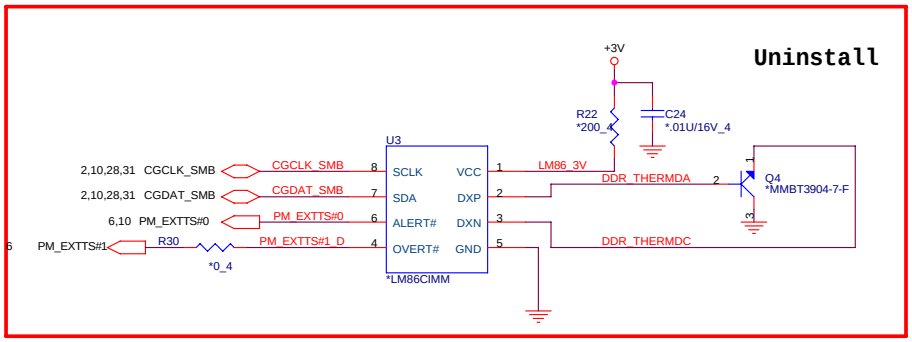

+0.9VSMVTT 37

+3V 2,4,6,9,10,12,14,15,17,18,19,20,21,22,24,25,26,28,29,30,31,35,36,38

PROJECT : QL6
Quanta Computer Inc.

NB5

Size	Document Number	Rev
Custom	DDR2 termination	4A

Date: Thursday, June 05, 2008 Sheet 11 of 40

NB9M (G98)

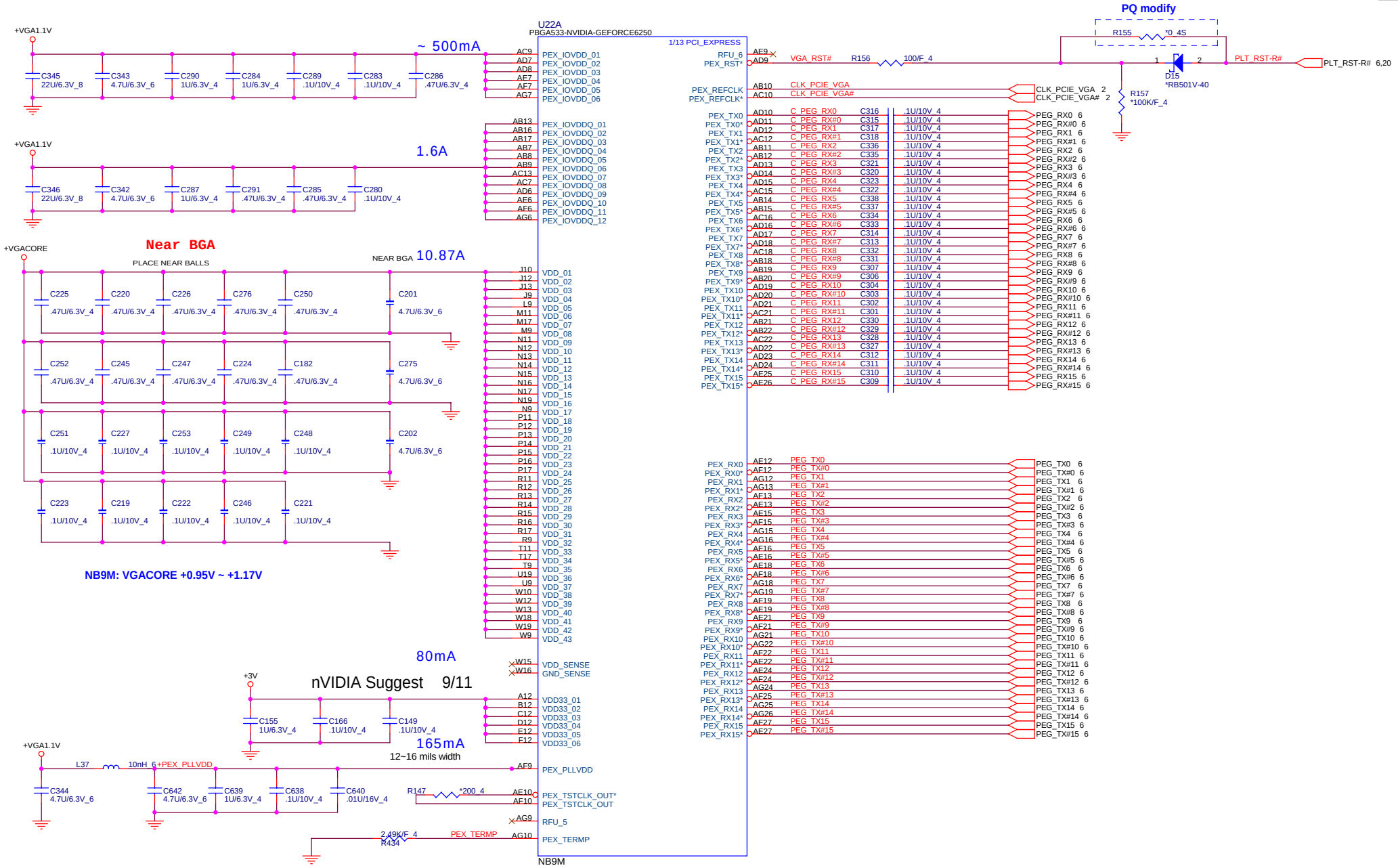

PROJECT : QL6
Quanta Computer Inc.

NB5

Size	Document Number	Rev
Custom	NV9X (PCIE I/F) 1/5	4A

Date: Thursday, June 05, 2008 Sheet 12 of 40

U22B
PBGA533-NVIDIA-GEFORCE6250
2/13 FRAME_BUFFER

1.63A

+1.8V

FBVDDQ_01 A13
FBVDDQ_02 B13
FBVDDQ_03 C13
FBVDDQ_04 D13
FBVDDQ_05 D14
FBVDDQ_06 E13
FBVDDQ_07 F13
FBVDDQ_08 F14
FBVDDQ_09 F15
FBVDDQ_10 F16
FBVDDQ_11 F17
FBVDDQ_12 F19
FBVDDQ_13 F22
FBVDDQ_14 H23
FBVDDQ_15 H26
FBVDDQ_16 J15
FBVDDQ_17 J16
FBVDDQ_18 J18
FBVDDQ_19 J19
FBVDDQ_20 L19
FBVDDQ_21 L23
FBVDDQ_22 L26
FBVDDQ_23 M19
FBVDDQ_24 N22
FBVDDQ_25 U22
FBVDDQ_26 Y22

16 VMA_DQ[63..0]
16 VMA_DM[7..0]
16 VMA_WDQS[7..0]
16 VMA_RDQS[7..0]

FBA_D0	D21	VMA_DQ0	
FBA_D1	C22	VMA_DQ1	
FBA_D2	B22	VMA_DQ2	
FBA_D3	A22	VMA_DQ3	
FBA_D4	C24	VMA_DQ4	
FBA_D5	B25	VMA_DQ5	
FBA_D6	A25	VMA_DQ6	
FBA_D7	A26	VMA_DQ7	
FBA_D8	D22	VMA_DQ8	
FBA_D9	E22	VMA_DQ9	
FBA_D10	F24	VMA_DQ10	
FBA_D11	D24	VMA_DQ11	
FBA_D12	D26	VMA_DQ12	
FBA_D13	D27	VMA_DQ13	
FBA_D14	C27	VMA_DQ14	
FBA_D15	B27	VMA_DQ15	
FBA_D16	D16	VMA_DQ16	
FBA_D17	E16	VMA_DQ17	
FBA_D18	D17	VMA_DQ18	
FBA_D19	F18	VMA_DQ19	
FBA_D20	D20	VMA_DQ20	
FBA_D21	F20	VMA_DQ21	
FBA_D22	E21	VMA_DQ22	
FBA_D23	F21	VMA_DQ23	
FBA_D24	C16	VMA_DQ24	
FBA_D25	B18	VMA_DQ25	
FBA_D26	C18	VMA_DQ26	
FBA_D27	D18	VMA_DQ27	
FBA_D28	C19	VMA_DQ28	
FBA_D29	C21	VMA_DQ29	
FBA_D30	B21	VMA_DQ30	
FBA_D31	A21	VMA_DQ31	
FBA_D32	P22	VMA_DQ32	
FBA_D33	P24	VMA_DQ33	
FBA_D34	R23	VMA_DQ34	
FBA_D35	R24	VMA_DQ35	
FBA_D36	T23	VMA_DQ36	
FBA_D37	U24	VMA_DQ37	
FBA_D38	V23	VMA_DQ38	
FBA_D39	V24	VMA_DQ39	
FBA_D40	N25	VMA_DQ40	
FBA_D41	N26	VMA_DQ41	
FBA_D42	R25	VMA_DQ42	
FBA_D43	R26	VMA_DQ43	
FBA_D44	T25	VMA_DQ44	
FBA_D45	V26	VMA_DQ45	
FBA_D46	V25	VMA_DQ46	
FBA_D47	V27	VMA_DQ47	
FBA_D48	V22	VMA_DQ48	
FBA_D49	W22	VMA_DQ49	
FBA_D50	W23	VMA_DQ50	
FBA_D51	W24	VMA_DQ51	
FBA_D52	AA22	VMA_DQ52	
FBA_D53	AB23	VMA_DQ53	
FBA_D54	AB24	VMA_DQ54	
FBA_D55	AC24	VMA_DQ55	
FBA_D56	W25	VMA_DQ56	
FBA_D57	W26	VMA_DQ57	
FBA_D58	W27	VMA_DQ58	
FBA_D59	AA25	VMA_DQ59	
FBA_D60	AB25	VMA_DQ60	
FBA_D61	AB26	VMA_DQ61	
FBA_D62	AD26	VMA_DQ62	
FBA_D63	AD27	VMA_DQ63	

16 VMA_MA3	F26	FBA_CMD0	
16 VMA_MA0	J24	FBA_CMD1	
16 VMA_MA2	F25	FBA_CMD2	
16 VMA_MA1	M23	FBA_CMD3	
16 VMA_MA3H	N27	FBA_CMD4	
16 VMA_MA4H	M27	FBA_CMD5	
16 VMA_MA5H	K26	FBA_CMD6	
	J25	FBA_CMD7	
16 VMA_CS0#	J27	FBA_CMD8	
16 VMA_WE#	G23	FBA_CMD9	
16 VMA_BA0	G26	FBA_CMD10	
16 VMA_CKE	J23	FBA_CMD11	
16 VMA_ODT	M25	FBA_CMD12	
16 VMA_MA2H	K27	FBA_CMD13	
16 VMA_MA12	G25	FBA_CMD14	
16 VMA_RAS#	L24	FBA_CMD15	
16 VMA_MA11	K23	FBA_CMD16	
16 VMA_MA10	K24	FBA_CMD17	
16 VMA_BA1	G22	FBA_CMD18	
16 VMA_MA8	K25	FBA_CMD19	
16 VMA_MA9	H22	FBA_CMD20	
16 VMA_MA6	M26	FBA_CMD21	
16 VMA_MA5	H24	FBA_CMD22	
16 VMA_MA7	F27	FBA_CMD23	
16 VMA_MA4	J26	FBA_CMD24	
16 VMA_CAS#	G24	FBA_CMD25	
	G27	FBA_CMD26	
16 VMA_BA2	M24	FBA_CMD27	
	K22	FBA_CMD28	
	J22	RFU_3	
	L22	RFU_4	
16 VMA_CLK0	VMA_CLK0 F24	FBA_CLK0	
16 VMA_CLK0#	VMA_CLK0# F23	FBA_CLK0*	
16 VMA_CLK1	VMA_CLK1 N24	FBA_CLK1	
16 VMA_CLK1#	VMA_CLK1# N23	FBA_CLK1*	

FBA_DQM0	D23	VMA_DM0	
FBA_DQM1	C26	VMA_DM1	
FBA_DQM2	D19	VMA_DM2	
FBA_DQM3	B19	VMA_DM3	
FBA_DQM4	T24	VMA_DM4	
FBA_DQM5	T26	VMA_DM5	
FBA_DQM6	AA23	VMA_DM6	
FBA_DQM7	AB27	VMA_DM7	
FB_CAL_PD_VDDQ	B15		
FB_CAL_PU_GND	A15		
FB_CAL_TERM_GND	B16		
FBA_DQS_WP0	A24	VMA_WDQS0	
FBA_DQS_WP1	C25	VMA_WDQS1	
FBA_DQS_WP2	E19	VMA_WDQS2	
FBA_DQS_WP3	A19	VMA_WDQS3	
FBA_DQS_WP4	T22	VMA_WDQS4	
FBA_DQS_WP5	T27	VMA_WDQS5	
FBA_DQS_WP6	AA24	VMA_WDQS6	
FBA_DQS_WP7	AA26	VMA_WDQS7	
FBA_DQS_RN0	B24	VMA_RDQS0	
FBA_DQS_RN1	D25	VMA_RDQS1	
FBA_DQS_RN2	E18	VMA_RDQS2	
FBA_DQS_RN3	A18	VMA_RDQS3	
FBA_DQS_RN4	R22	VMA_RDQS4	
FBA_DQS_RN5	R27	VMA_RDQS5	
FBA_DQS_RN6	Y24	VMA_RDQS6	
FBA_DQS_RN7	AA27	VMA_RDQS7	
FB_VREF	A16	+FB_VREF1	
FB_DEBUG	M22		
FB_PLLAVDD	R19		
FB_DLLAVDD	T19		

NB9M-GE:stuff 30/F
CS03012FB21

+1.8V R82 30/F_4 FB_CAL_PD_VDDQ
R75 30/F_4 FB_CAL_PU_GND
R80 *40.2/F_4 FB_CAL_TERM_GND
R192 Install for DDR3
+1.8V *60.4/F_4 R108 FBA_DEBUG
For Debug only

+VGA1.1V
L24
HCB1608KF-181T15_6
15mils width
+FB_PLLAVDD
10mA
C353 4.7U/6.3V_6
C244 .1U/10V_4
C218 .1U/10V_4
C352 1U/6.3V_4
25mA

R385 10K/F_4 VMA_ODT
R67 10K/F_4 VMA_CKE

for DDR2 need use
CMD11(CKE) and
CMD12(ODT)

power up sequence

+VGA1.1V
+3V
+VGACORE
+1.8V

+1.8V
R81 1K/F_4
15mils width
C140 .1U/10V_4
R74 1K/F_4

NB9M

U22J
PBGA533-NVIDIA-GEFORCE6250
13/13 GND_NC

		NC_01	AA6
		NC_02	AC19
		NC_03	E15
		NC_04	Y6
AC11	GND_01		
AC14	GND_02		
AC17	GND_03		
AC2	GND_04		
AC20	GND_05		
AC23	GND_06		
AC26	GND_07		
AC5	GND_08		
AC8	GND_09		
AE11	GND_10		
AE14	GND_11		
AE17	GND_12		
AE2	GND_13		
AE20	GND_14		
AE23	GND_15		
AE26	GND_16		
AE5	GND_17		
AE8	GND_18		
B11	GND_19		
B14	GND_20		
B17	GND_21		
B2	GND_22		
B20	GND_23		
B23	GND_24		
B26	GND_25		
B5	GND_26		
B8	GND_27		
E11	GND_28		
E14	GND_29		
E17	GND_30		
E2	GND_31		
E20	GND_32		
E23	GND_33		
E26	GND_34		
E5	GND_35		
E8	GND_36		
H2	GND_37		
H5	GND_38		
J11	GND_39		
J14	GND_40		
J17	GND_41		
K19	GND_42		
K9	GND_43		
L11	GND_44		
L12	GND_45		
L13	GND_46		
L14	GND_47		
L15	GND_48		
L16	GND_49		
L17	GND_50		
L2	GND_51		
L5	GND_52		
M12	GND_53		
M13	GND_54		
M14	GND_55		
M15	GND_56		
M16	GND_57		
P19	GND_58		
P2	GND_59		
P23	GND_60		
P26	GND_61		
P5	GND_62		
P9	GND_63		
T12	GND_64		
T13	GND_65		
T14	GND_66		
T15	GND_67		
T16	GND_68		
U11	GND_69		
U12	GND_70		
U13	GND_71		
U14	GND_72		
U15	GND_73		
U16	GND_74		
U17	GND_75		
U2	GND_76		
U23	GND_77		
U26	GND_78		
U5	GND_79		
V19	GND_80		
V9	GND_81		
W11	GND_82		
W14	GND_83		
W17	GND_84		
Y2	GND_85		
Y23	GND_86		
Y26	GND_87		
Y5	GND_88		

NB9M

+1.8V
C148 4.7U/6.3V_6
C168 .47U/6.3V_4
C189 .47U/6.3V_4
C282 .1U/10V_4
C641 4.7U/6.3V_6
C178 .47U/6.3V_4
C123 .47U/6.3V_4
C190 .1U/10V_4
C294 .1U/10V_4
C150 .1U/10V_4
C171 .1U/10V_4
C627 .1U/10V_4
C625 .1U/10V_4
C646 .1U/10V_4

+1.8V
C645 4.7U/6.3V_6
C156 .47U/6.3V_4
C191 .47U/6.3V_4
C271 .1U/10V_4
C325 4.7U/6.3V_6
C200 .47U/6.3V_4
C242 .47U/6.3V_4
C621 .1U/10V_4
C217 .1U/10V_4
C243 .1U/10V_4
C188 .1U/10V_4
C167 .1U/10V_4
C170 .1U/10V_4
C288 .1U/10V_4

NB5

PROJECT : QL6
Quanta Computer Inc.

Size	Document Number	Rev
Custom	NV9X (MEMORY I/F) 2/5	4A

Date: Thursday, June 05, 2008 Sheet 13 of 40

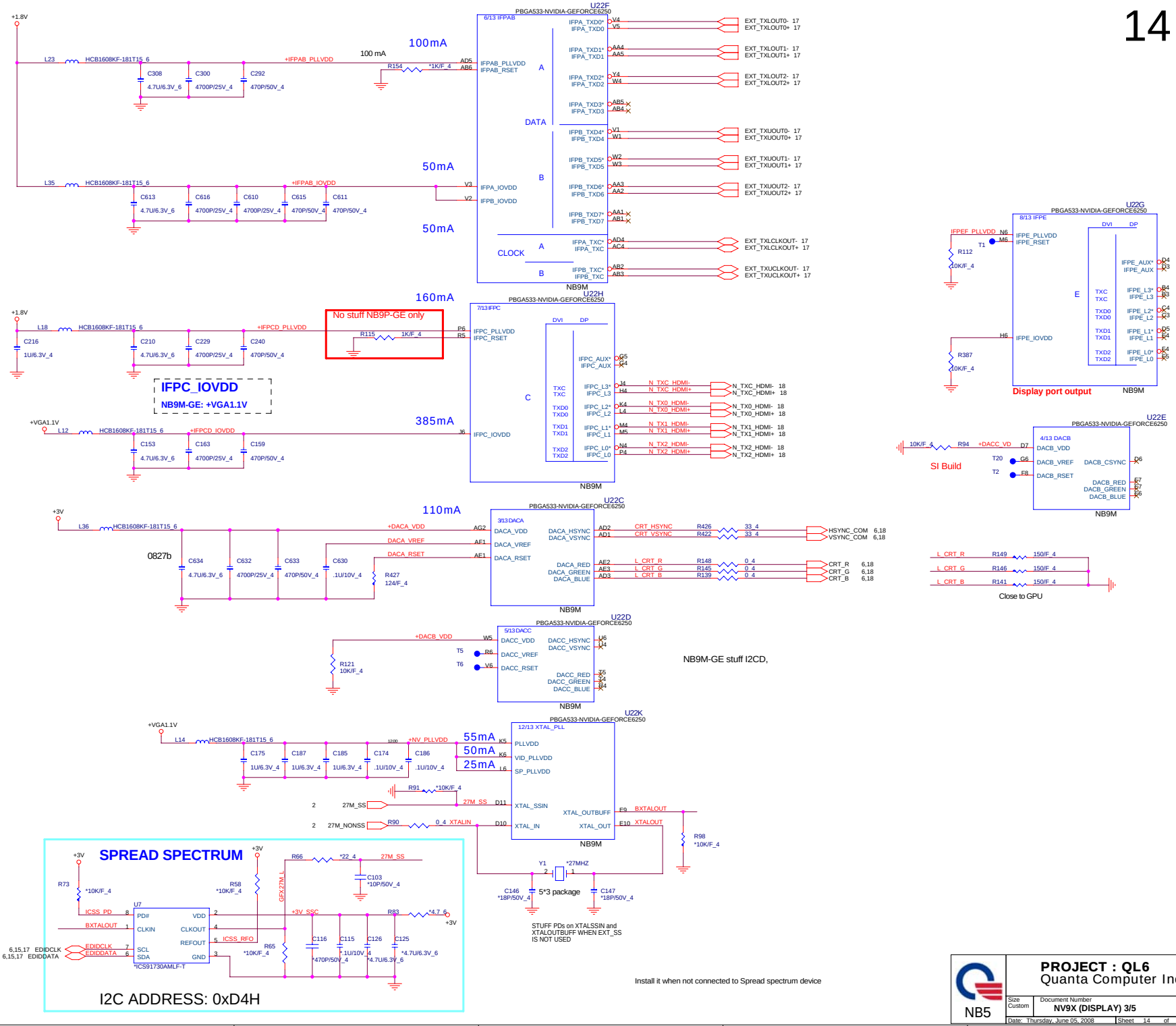

NB5	**PROJECT : QL6** Quanta Computer Inc.	
Size Custom	Document Number **NV9X (DISPLAY) 3/5**	Rev 4A
Date: Thursday, June 05, 2008	Sheet 14 of 40	

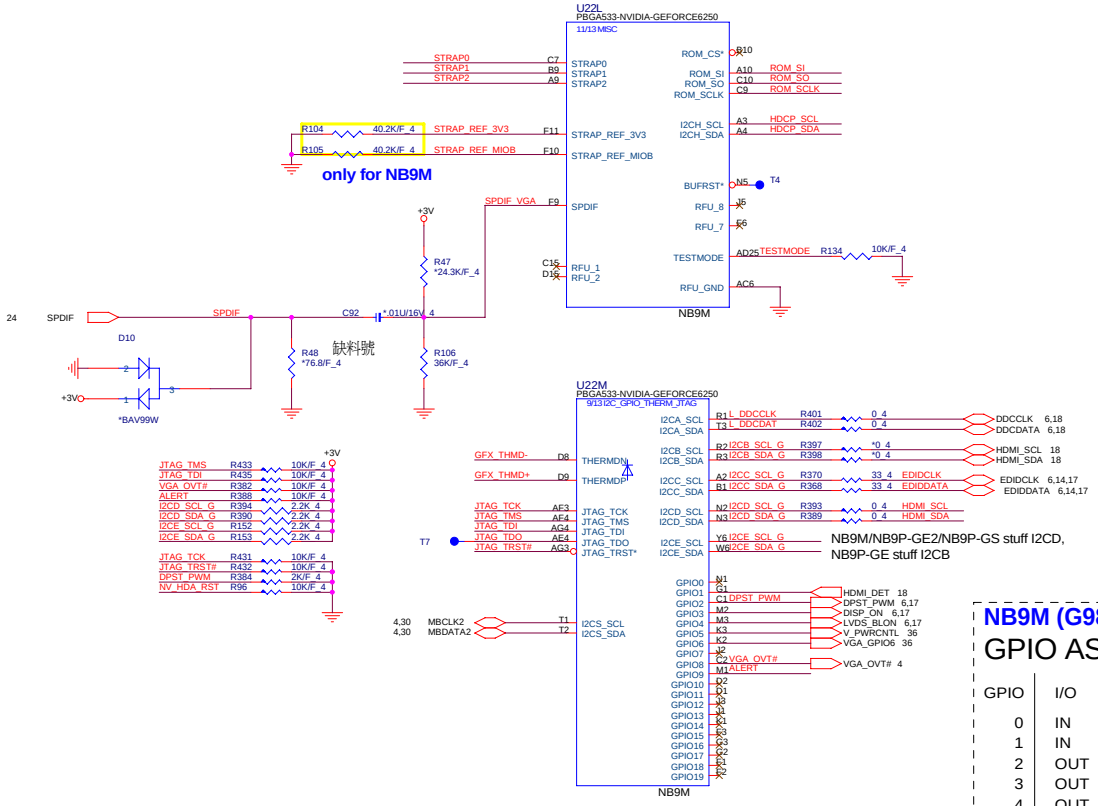

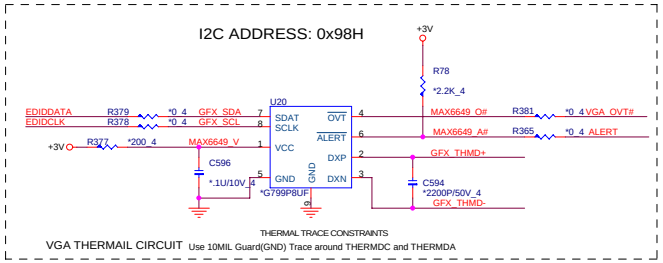

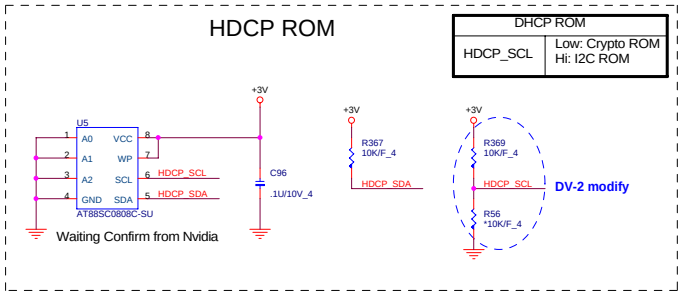

NB9M (G98) Strraps

GPIO ASSIGNMENTS

GPIO	I/O	ACTIVE	USAGE
0	IN	N/A	PRIMARY DVI HOTPLUG
1	IN	N/A	SECONDARY DVI HOTPLUG
2	OUT	HIGH	PANEL BACKLIGHT PWM
3	OUT	HIGH	PANEL POWER ENABLE
4	OUT	HIGH	PANEL BACKLIGHT ENABLE
4	OUT	N/A	NVVDD VID0
6	OUT	N/A	NVVDD VID1
7	OUT	N/A	FBVDD VID0
8	IN	LOW	THERMAL ALERT
9	OUT	LOW	FAN PWM
10	OUT	N/A	FBVREF SELECT
11	OUT	N/A	SLI SYNC0
12	IN	N/A	AC DETECT
13	OUT	LOW	PS CONTROL OR HDMI_CEC
14	OUT	HIGH	PS CONTROL

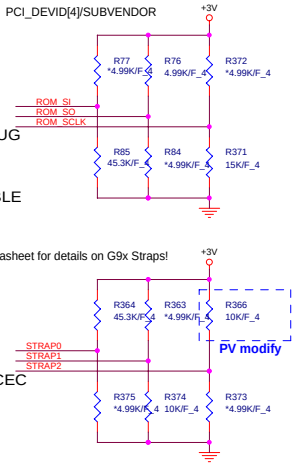

VRAM ID	
ROM_SI	PD 30K: Samsung PD 35K: Qimonda PD 45K: Hynix

Logical Strap Bit Mapping

	PU-VDD	PD
5K	1000	0000
10K	1001	0001
15K	1010	0010
20K	1011	0011
25K	1100	0100
30K	1101	0101
35K	1110	0110
45K	1111	0111

NB5

PROJECT : QL6
Quanta Computer Inc.

Size	Document Number	Rev
C	NV9X (GPIO & STRRAPS) 4/5	4A

Date: Thursday, June 05, 2008 Sheet 15 of 40

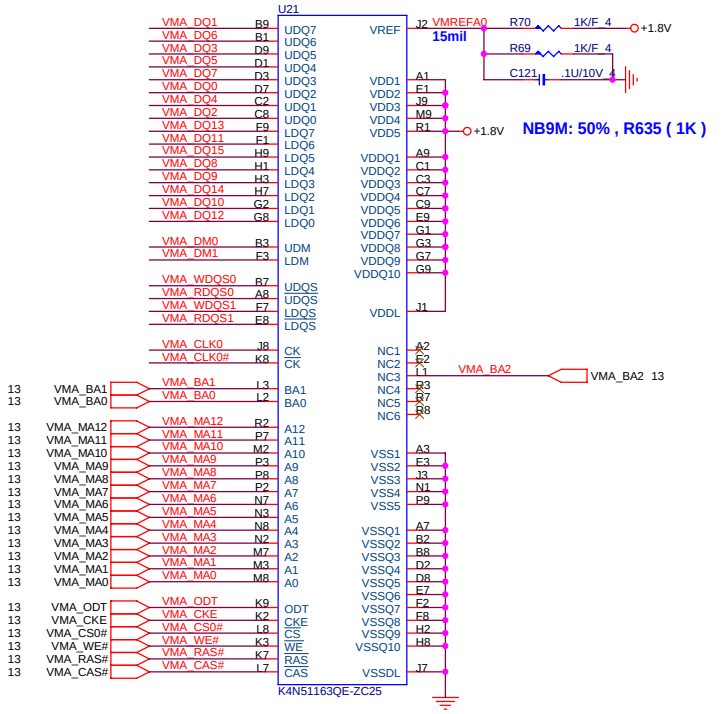

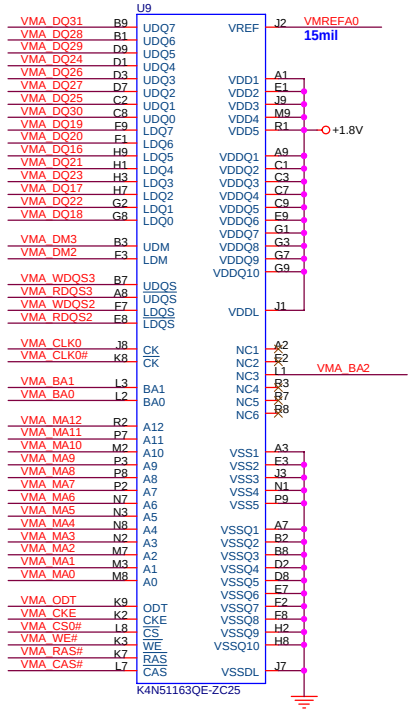

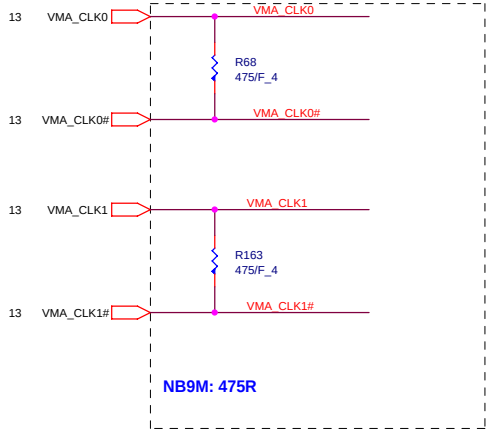

CS14752FB11 RES CHIP 475 1/16W +-1%(0402)

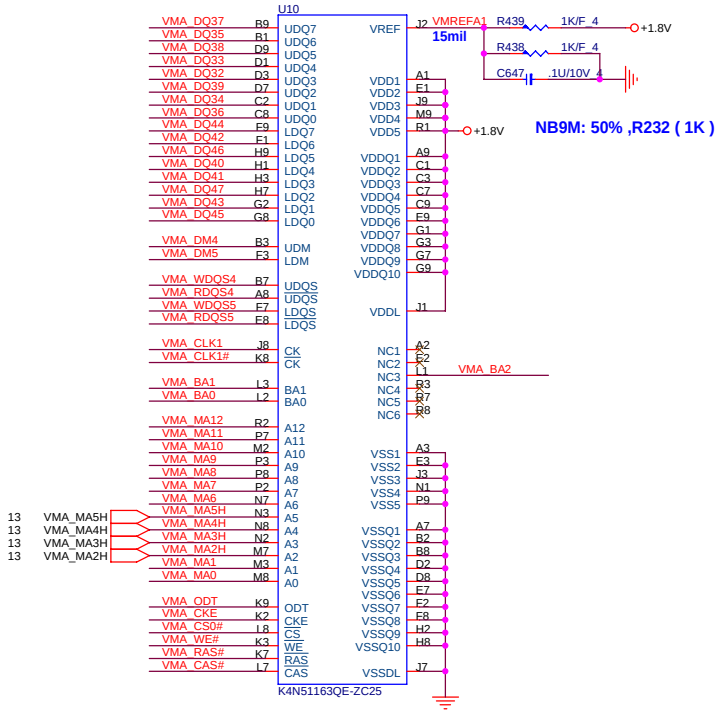

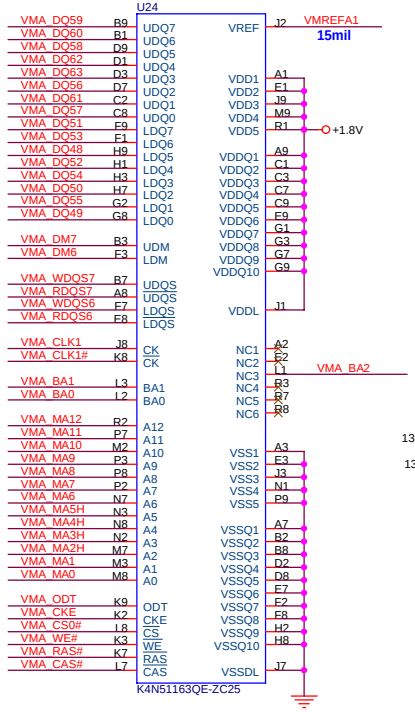

(By pass capacitor)

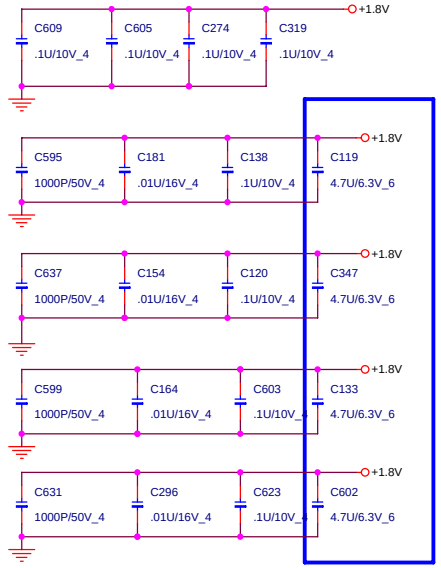

13 VMA_DQ[63..0]
13 VMA_DM[7..0]
13 VMA_WDQS[7..0]
13 VMA_RDQS[7..0]

256Mb : AKD5JGAT^05
512Mb : AKD59G-T^01

NB9M : AKD5FG-TW31(Hynix,32M*16)
AKD5FG-T^03(Qimonda 32M*16)

NB5

PROJECT : QL6
Quanta Computer Inc.

Size	Document Number	Rev
Custom	NV9X VRAM-1(GDDR2) 5/5	4A

Date: Thursday, June 05, 2008 Sheet 16 of 40

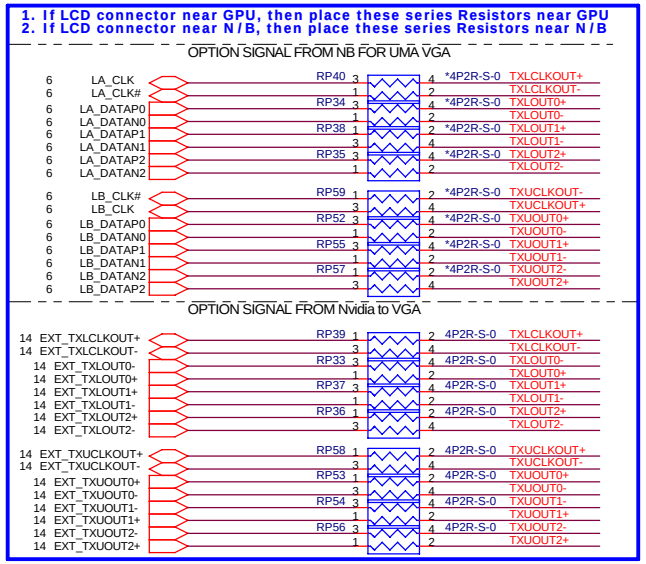

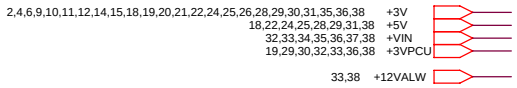

LCD / USB CAMERA / DIGITAL MIC CONNECTOR

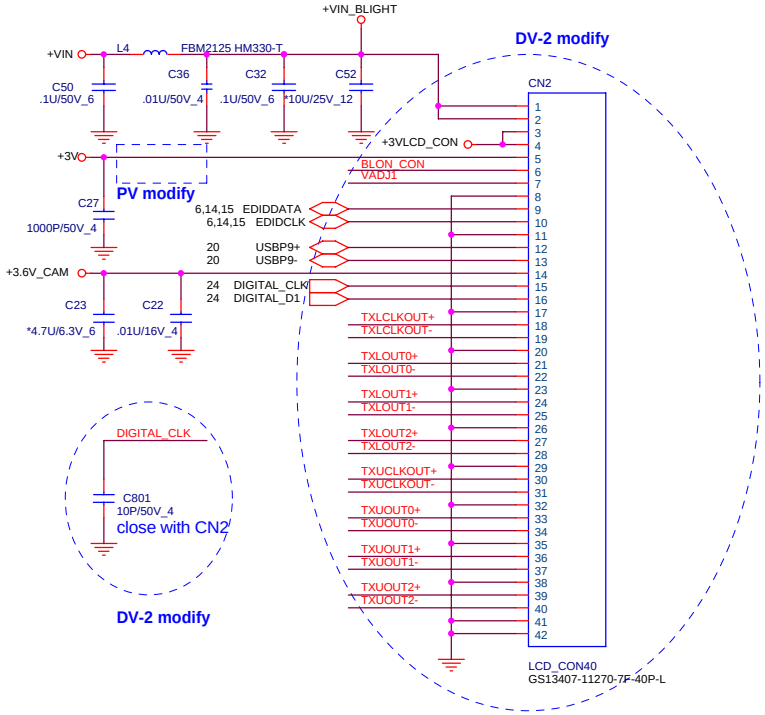

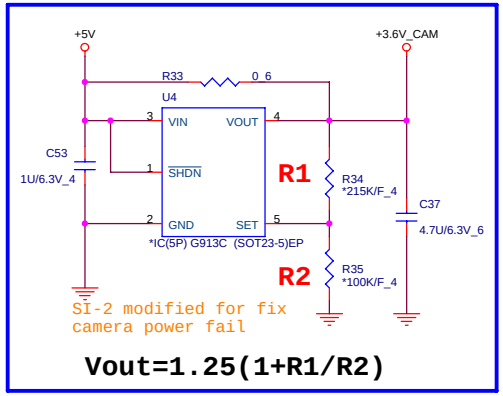

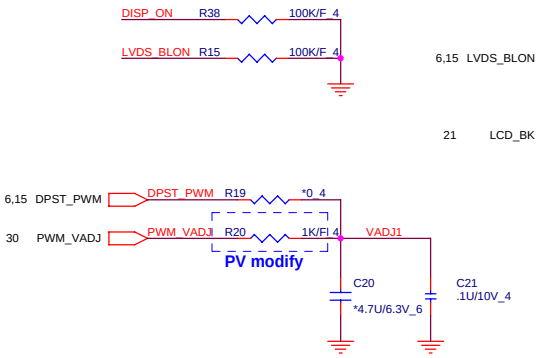

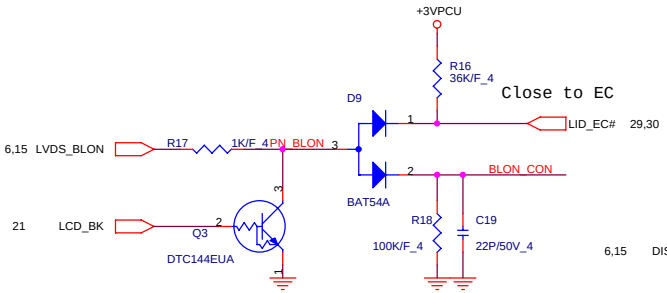

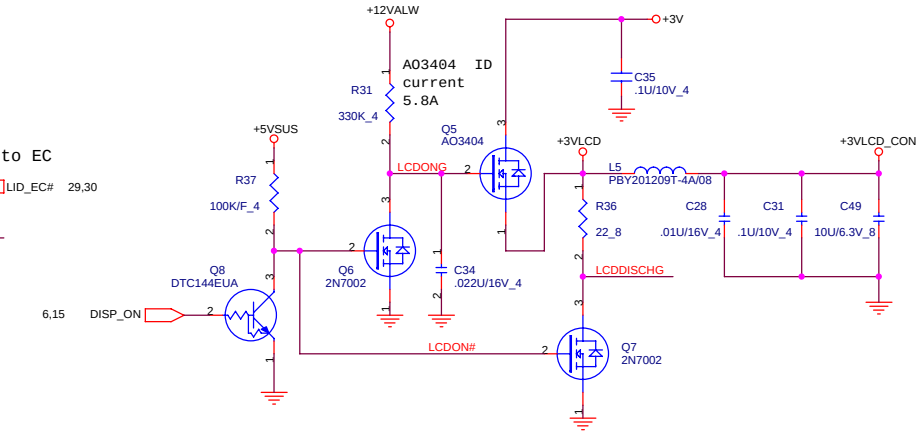

NB5	**PROJECT : QL6** Quanta Computer Inc.	
Size Custom	Document Number **LCD CONN(WC/MIC)/LID**	Rev 4A
	Date: Thursday, June 05, 2008	Sheet 17 of 40

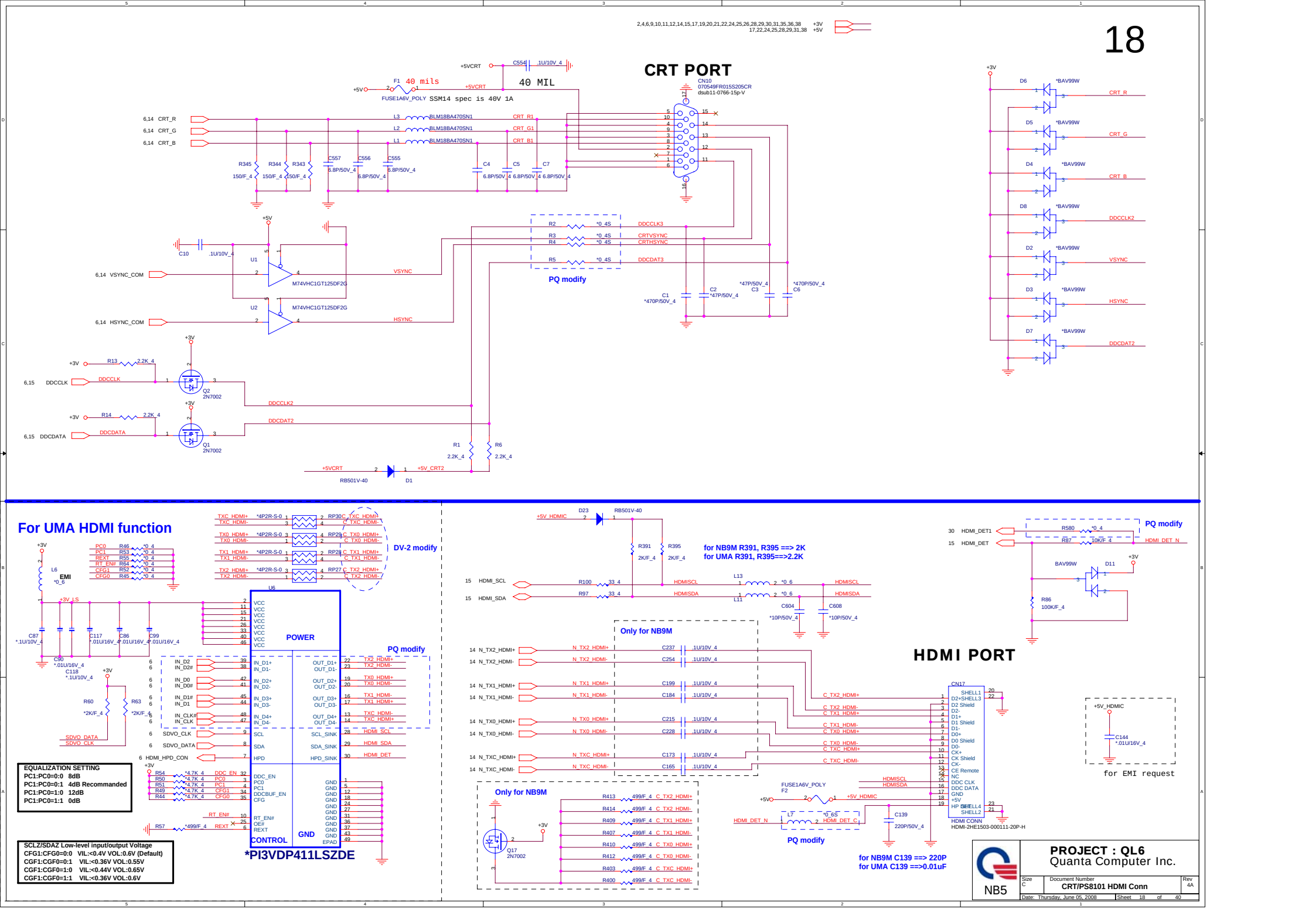
CRT PORT
CN10
070549FR015S205CR
dsub11-0766-15p-V
F1 40 mils
FUSE1A6V_POLY SSM14 spec is 40V 1A
40 MIL
+5VCRT
C554 .1U/10V_4
6,14 CRT_R
6,14 CRT_G
6,14 CRT_B
L3 BLM18BA470SN1
L2 BLM18BA470SN1
L1 BLM18BA470SN1
CRT_R1
CRT_G1
CRT_B1
R345 150/F_4
R344 150/F_4
R343 150/F_4
C557 6.8P/50V_4
C556 6.8P/50V_4
C555 6.8P/50V_4
C4 6.8P/50V_4
C5 6.8P/50V_4
C7 6.8P/50V_4
6,14 VSYNC_COM
6,14 HSYNC_COM
U1 M74VHC1GT125DF2G
U2 M74VHC1GT125DF2G
C10 .1U/10V_4
VSYNC
HSYNC
R2 *0_4S DDCCLK3
R3 *0_4S CRTVSYNC
R4 *0_4S CRTHSYNC
R5 *0_4S DDCDAT3
PQ modify
C1 *470P/50V_4
C2 *47P/50V_4
C3 *47P/50V_4
C6 *470P/50V_4
6,15 DDCCLK
6,15 DDCDATA
R13 2.2K_4
R14 2.2K_4
Q2 2N7002
Q1 2N7002
DDCCLK2
DDCDAT2
R1 2.2K_4
R6 2.2K_4
+5VCRT
+5V_CRT2
RB501V-40 D1
D6 *BAV99W CRT_R
D5 *BAV99W CRT_G
D4 *BAV99W CRT_B
D8 *BAV99W DDCCLK2
D2 *BAV99W VSYNC
D3 *BAV99W HSYNC
D7 *BAV99W DDCDAT2
For UMA HDMI function
EMI
L6 *0_6
PC0 R46 *0_4
PC1 R53 *0_4
REXT R55 *0_4
RT_EN# R54 *0_4
CFG1 R52 *0_4
CFG0 R45 *0_4
TXC_HDMI+ TXC_HDMI- *4P2R-S-0 RP30 C_TXC_HDMI+ C_TXC_HDMI-
TX0_HDMI+ TX0_HDMI- *4P2R-S-0 RP29 C_TX0_HDMI+ C_TX0_HDMI-
TX1_HDMI+ TX1_HDMI- *4P2R-S-0 RP28 C_TX1_HDMI+ C_TX1_HDMI-
TX2_HDMI+ TX2_HDMI- *4P2R-S-0 RP27 C_TX2_HDMI+ C_TX2_HDMI-
DV-2 modify
U6
POWER
PQ modify
CONTROL
GND
*PI3VDP411LSZDE
C87 *.1U/10V_4
C118 *.1U/10V_4
C117 *.01U/16V_4
C86 *.01U/16V_4
C99 *.01U/16V_4
C90 *.01U/16V_4
R60 *2K/F_4
R63 *2K/F_4
SDVO_DATA
SDVO_CLK
HDMI_HPD_CON
R54 *4.7K_4 DDC_EN
R50 *4.7K_4 PC0
R51 *4.7K_4 PC1
R49 *4.7K_4 CFG1
R44 *4.7K_4 CFG0
RT_EN#
R57 *499/F_4 REXT
EQUALIZATION SETTING
PC1:PC0=0:0 8dB
PC1:PC0=0:1 4dB Recommanded
PC1:PC0=1:0 12dB
PC1:PC0=1:1 0dB
SCLZ/SDAZ Low-level input/output Voltage
CFG1:CFG0=0:0 VIL:<0.4V VOL:0.6V (Default)
CGF1:CGF0=0:1 VIL:<0.36V VOL:0.55V
CGF1:CGF0=1:0 VIL:<0.44V VOL:0.65V
CGF1:CGF0=1:1 VIL:<0.36V VOL:0.6V
+5V_HDMIC
D23 RB501V-40
R391 2K/F_4
R395 2K/F_4
for NB9M R391, R395 ==> 2K
for UMA R391, R395==>2.2K
15 HDMI_SCL
15 HDMI_SDA
R100 33_4
R97 33_4
HDMISCL
HDMISDA
L13 *0_6
L11
C604 *10P/50V_4
C608 *10P/50V_4
Only for NB9M
14 N_TX2_HDMI+
14 N_TX2_HDMI-
14 N_TX1_HDMI+
14 N_TX1_HDMI-
14 N_TX0_HDMI+
14 N_TX0_HDMI-
14 N_TXC_HDMI+
14 N_TXC_HDMI-
C237 .1U/10V_4
C254 .1U/10V_4
C199 .1U/10V_4
C184 .1U/10V_4
C215 .1U/10V_4
C228 .1U/10V_4
C173 .1U/10V_4
C165 .1U/10V_4
Only for NB9M
Q17 2N7002
R413 499/F_4 C_TX2_HDMI+
R414 499/F_4 C_TX2_HDMI-
R409 499/F_4 C_TX1_HDMI+
R407 499/F_4 C_TX1_HDMI-
R410 499/F_4 C_TX0_HDMI+
R412 499/F_4 C_TX0_HDMI-
R403 499/F_4 C_TXC_HDMI+
R400 499/F_4 C_TXC_HDMI-
HDMI_DET1
HDMI_DET
R580 *0_4
R87 10K/F_4
HDMI_DET_N
BAV99W D11
R86 100K/F_4
HDMI PORT
CN17
HDMI CONN
HDMI-2HE1503-000111-20P-H
FUSE1A6V_POLY F2
+5V_HDMIC
L7 *0_6S
HDMI_DET_C
C139 220P/50V_4
for NB9M C139 ==> 220P
for UMA C139 ==>0.01uF
C144 *.01U/16V_4
for EMI request
PROJECT : QL6
Quanta Computer Inc.
NB5
Size C
Document Number
CRT/PS8101 HDMI Conn
Rev 4A
Date: Thursday, June 05, 2008
Sheet 18 of 40

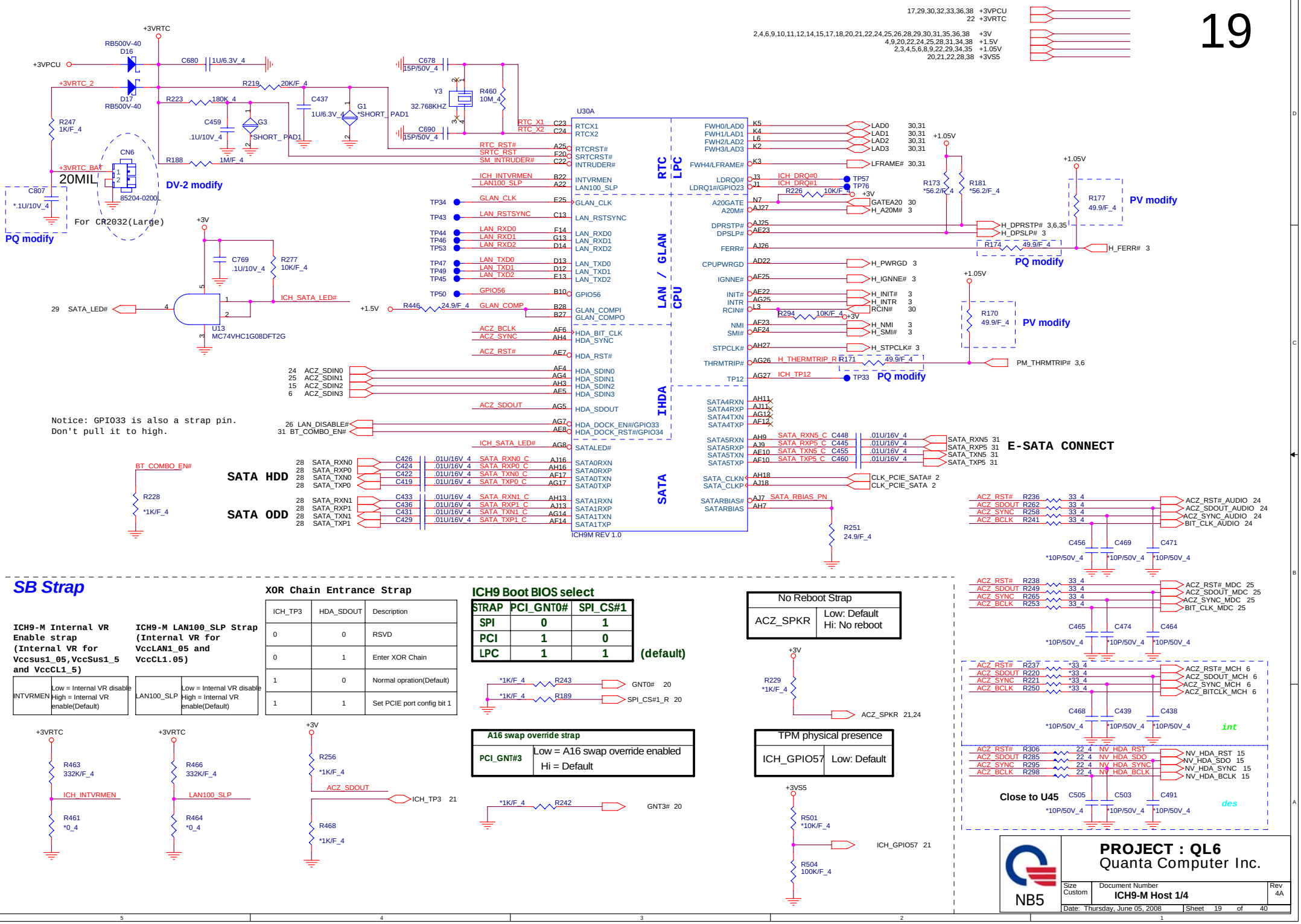
U30A
ICH9M REV 1.0
RTC LPC
LAN / GLAN CPU
IHDA
SATA
DV-2 modify
PQ modify
PV modify
E-SATA CONNECT
SATA HDD
SATA ODD
Notice: GPIO33 is also a strap pin.
Don't pull it to high.
For CR2032(Large)
SB Strap
ICH9-M Internal VR Enable strap (Internal VR for Vccsus1_05,VccSus1_5 and VccCL1_5)
ICH9-M LAN100_SLP Strap (Internal VR for VccLAN1_05 and VccCL1.05)
XOR Chain Entrance Strap
ICH9 Boot BIOS select
(default)
A16 swap override strap
No Reboot Strap
TPM physical presence
Close to U45
int
des
PROJECT : QL6
Quanta Computer Inc.
NB5
ICH9-M Host 1/4
Size Custom
Rev 4A
Date: Thursday, June 05, 2008
Sheet 19 of 40

4,9,19,22,24,25,28,31,34,38 +1.5V
2,4,6,9,10,11,12,14,15,17,18,19,21,22,24,25,26,28,29,30,31,35,36,38 +3V
21,23,29,31,34,35,36,38 +3VSUS

MINI CARD PCI-E(WLAN)

EXPRESS CARD (NEW CARD)

MINI CARD PCI-E(Robson)

PCIE-LAN

U30D

PCI-Express

Direct Media Interface

SPI

USB

ICH9M REV 1.0

E-SATA and USB Connector
USB Connector
USB Connector
DV-2 modify
Card Reader
NEW CARD
BLUETOOTH
Carama USB
DV-2 modify
Wireless Mini-Card
Robson Mini-Card

RP46 10P8R-8.2K
RP45 10P8R-8.2K
RP49 10P8R-8.2K
RP48 10P8R-8.2K

U29 *W25X40VSSIG

512K byte SPI ROM
For HDCP only
For GM HDCP

for EMI

For iTPM

U30B

PCI

Interrupt I/F

ICH9M REV 1.0

U31 *MC74VHC1G08DFT2G

PROJECT : QL6
Quanta Computer Inc.

Size	Document Number	Rev
Custom	ICH9-M PCIE 2/4	4A

Date: Thursday, June 05, 2008 Sheet 20 of 40

NB5

4,9,19,20,22,24,25,28,31,34,38 +1.5V
2,4,6,9,10,11,12,14,15,17,18,19,20,22,24,25,26,28,29,30,31,35,36,38 +3V
19,20,22,28,38 +3VS5
23,29,31,34,35,36,38 +3VSUS

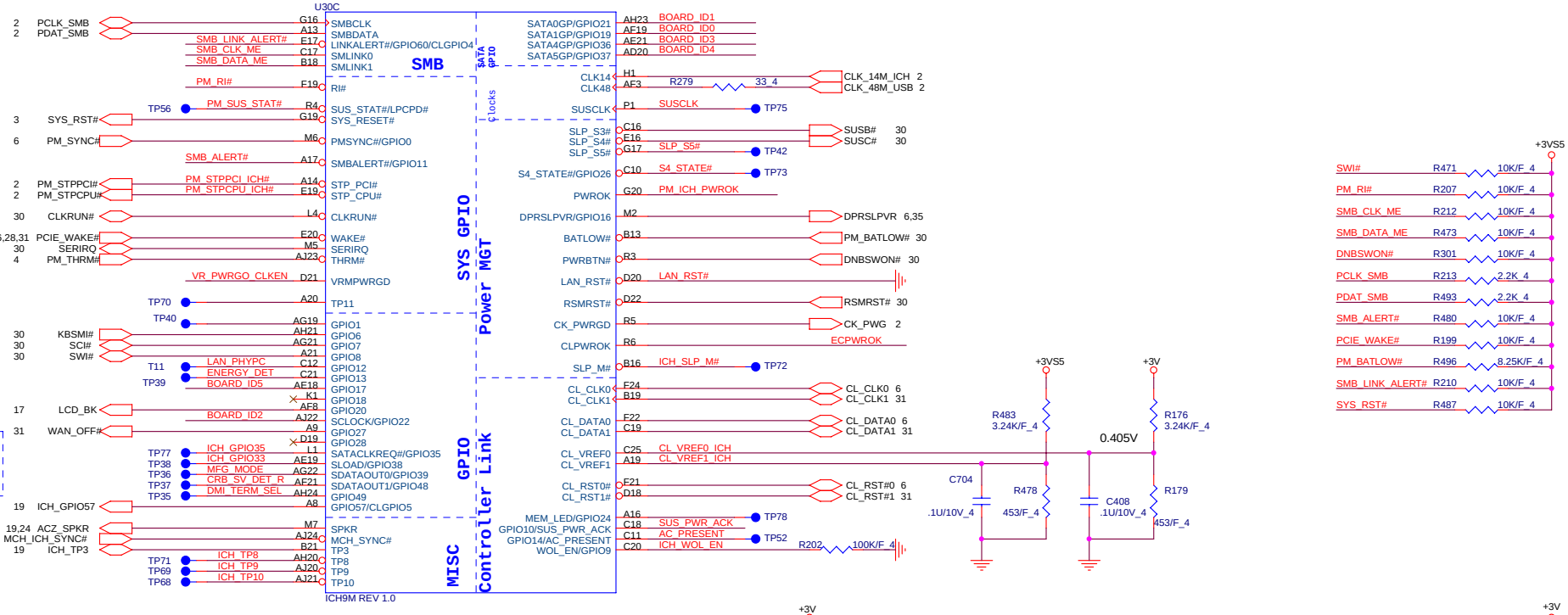

BIOS_REC:BOARD_ID2
Default is PH
For Bios recovery PD

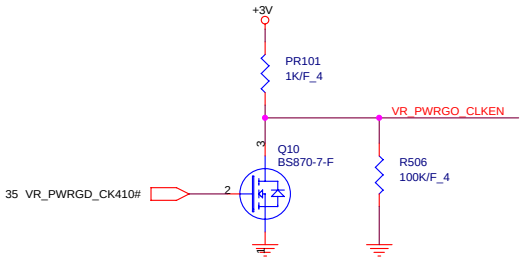

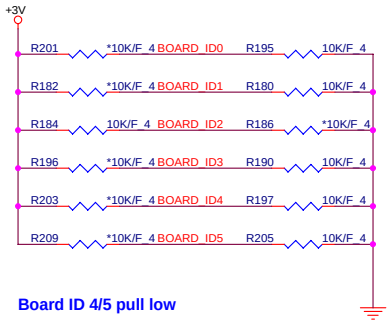

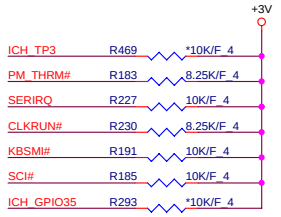

Board ID 4/5 pull low

Model	Board ID 3	Board ID 2	Board ID 1	Board ID 0
QL8/GM	0	0	0	0
QL8/9M	0	0	0	1
QL8/9P	0	0	1	0
QL6/GM	0	0	1	1
QL6/9M	0	1	0	0
TW8/GM	0	1	0	1
TW8/9M	0	1	1	0
TW8/9P	0	1	1	1
SW8/GM	1	0	0	0
SW8/9M	1	0	0	1
DW8/GM	1	0	1	0

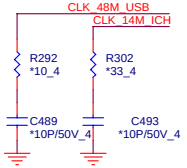

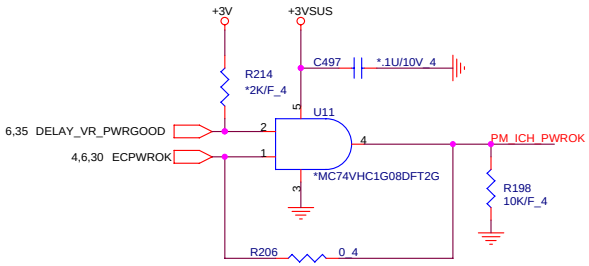

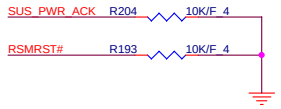

NB5

PROJECT : QL6
Quanta Computer Inc.

Size	Document Number	Rev
Custom	ICH9-M GPIO 3/4	4A

Date: Thursday, June 05, 2008 Sheet 21 of 40

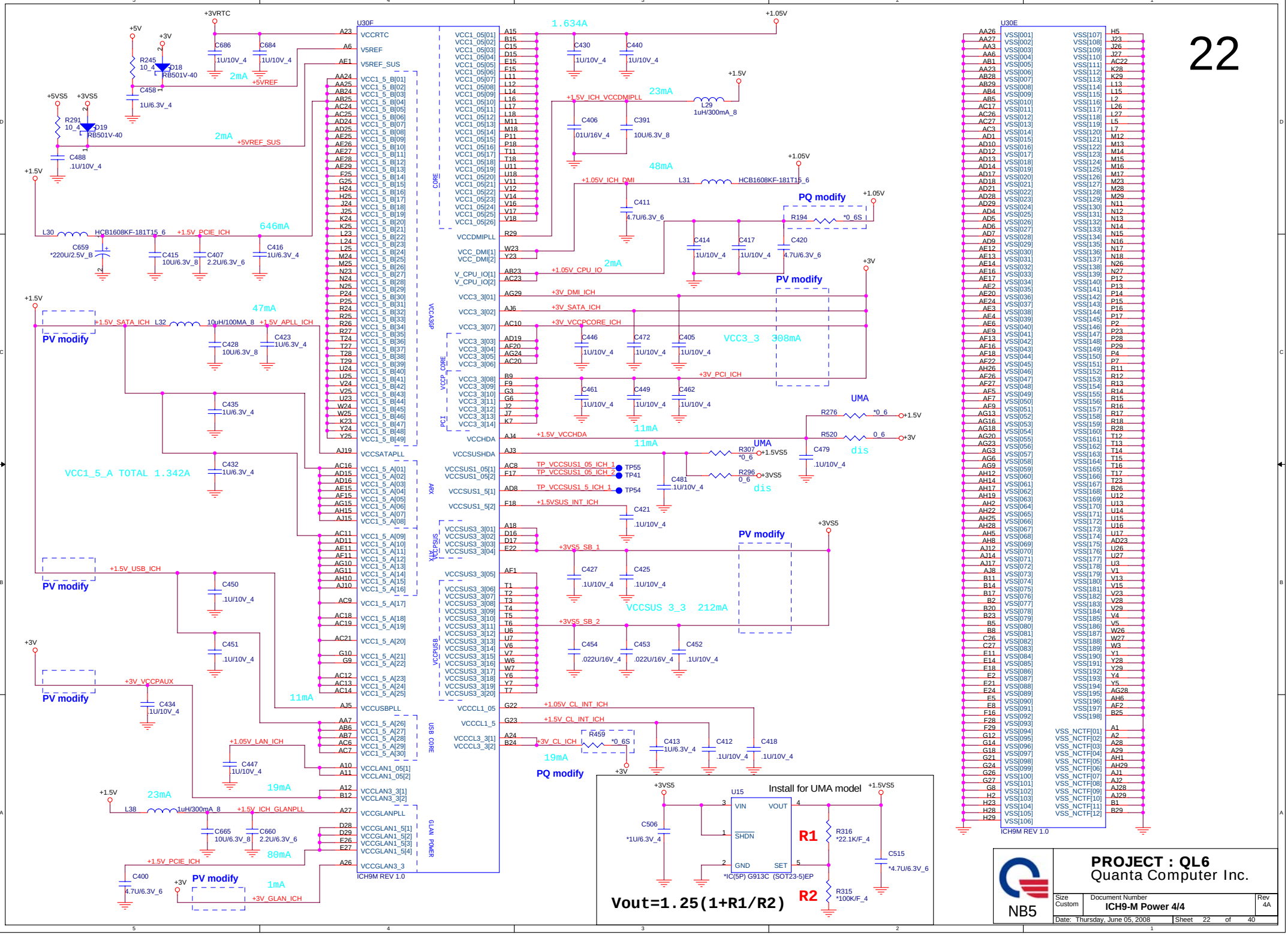
U30F
ICH9M REV 1.0
U30E
ICH9M REV 1.0
VCC1_5_A TOTAL 1.342A
VCC3_3 308mA
VCCSUS 3_3 212mA
PV modify
PQ modify
UMA
dis
Install for UMA model
U15
*IC(5P) G913C (SOT23-5)EP
R1
R2
Vout=1.25(1+R1/R2)
PROJECT : QL6
Quanta Computer Inc.
NB5
Size Custom
Document Number
ICH9-M Power 4/4
Rev 4A
Date: Thursday, June 05, 2008
Sheet 22 of 40

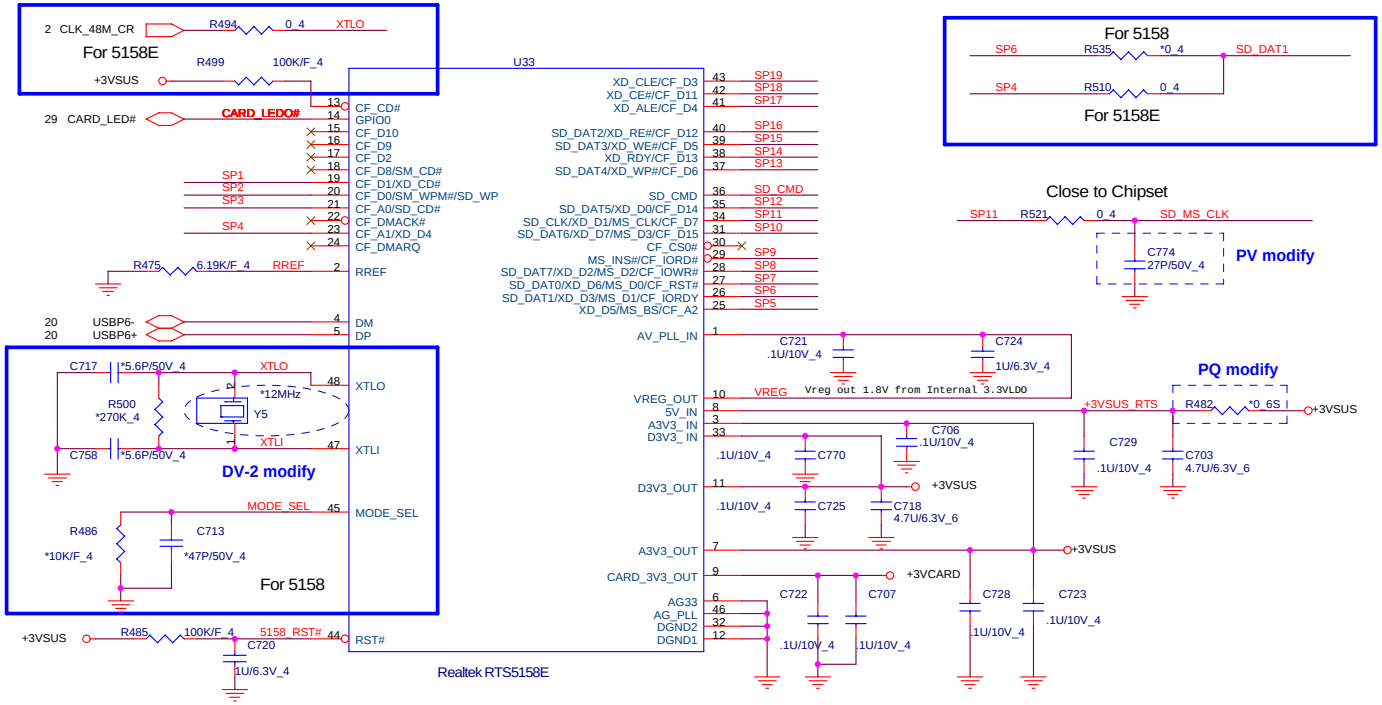

Note:

	SD/MMC	MS	XD
SP0			
SP1			XD_CD#
SP2	SD_WP		
SP3	SD_CD#		
SP4	SD_DAT1		XD_D4
SP5		MS_BS	XD_D5
SP6	SD_DAT1	MS_D1	XD_D3
SP7	SD_DAT0	MS_D0	XD_D6
SP8	SD_DAT7	MS_D2	XD_D2
SP9		MS_INS#	
SP10	SD_DAT6	MS_D3	XD_D7
SP11	SD_CLK	MS_SCLK	XD_D1
SP12	SD_DAT5		XD_D0
SP13	SD_DAT4		XD_WP#
SP14			XD_R/B#
SP15	SD_DAT3		XD_WE#
SP16	SD_DAT2		XD_RE#
SP17			XD_ALE
SP18			XD_CE#
SP19			XD_CLE

5 IN1 CARD READER
XD,MMC/SD,MS/MSP

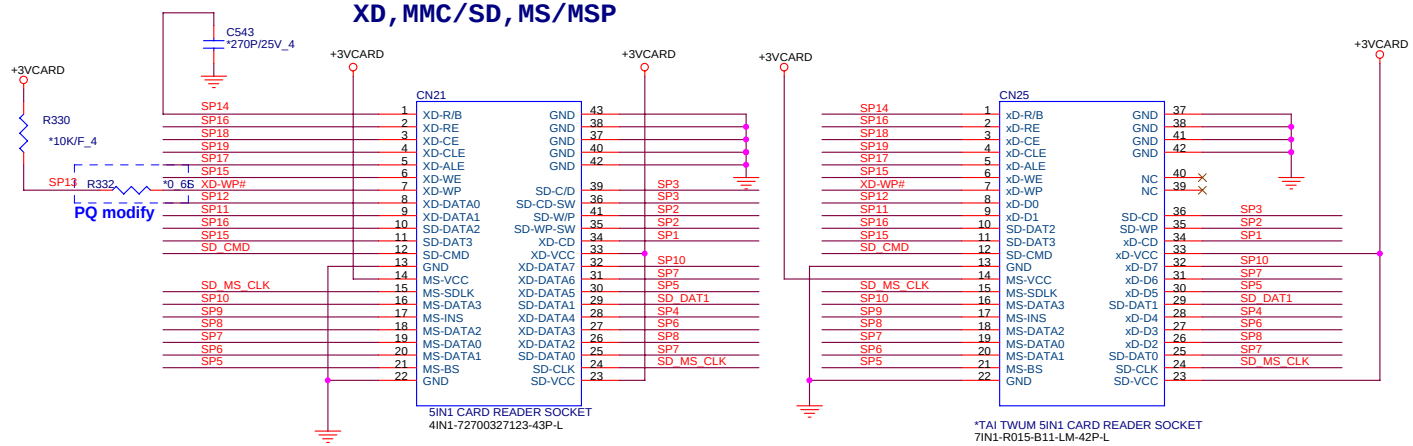

CLOSE CONN

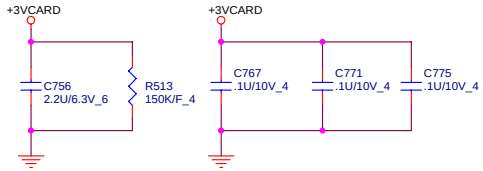

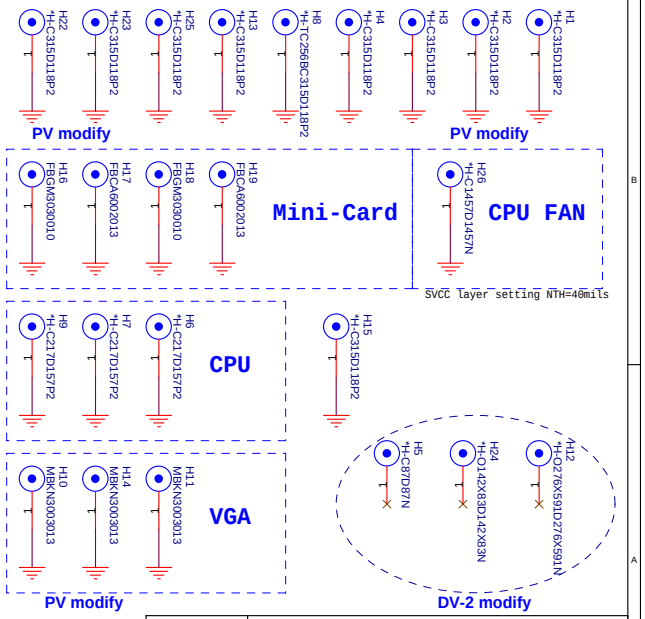

NB5

PROJECT : QL6
Quanta Computer Inc.

Size	Document Number	Rev
Custom	RTS5158 & CR SOCKET &HOLE	4A

Date: Thursday, June 05, 2008 | Sheet 23 of 40

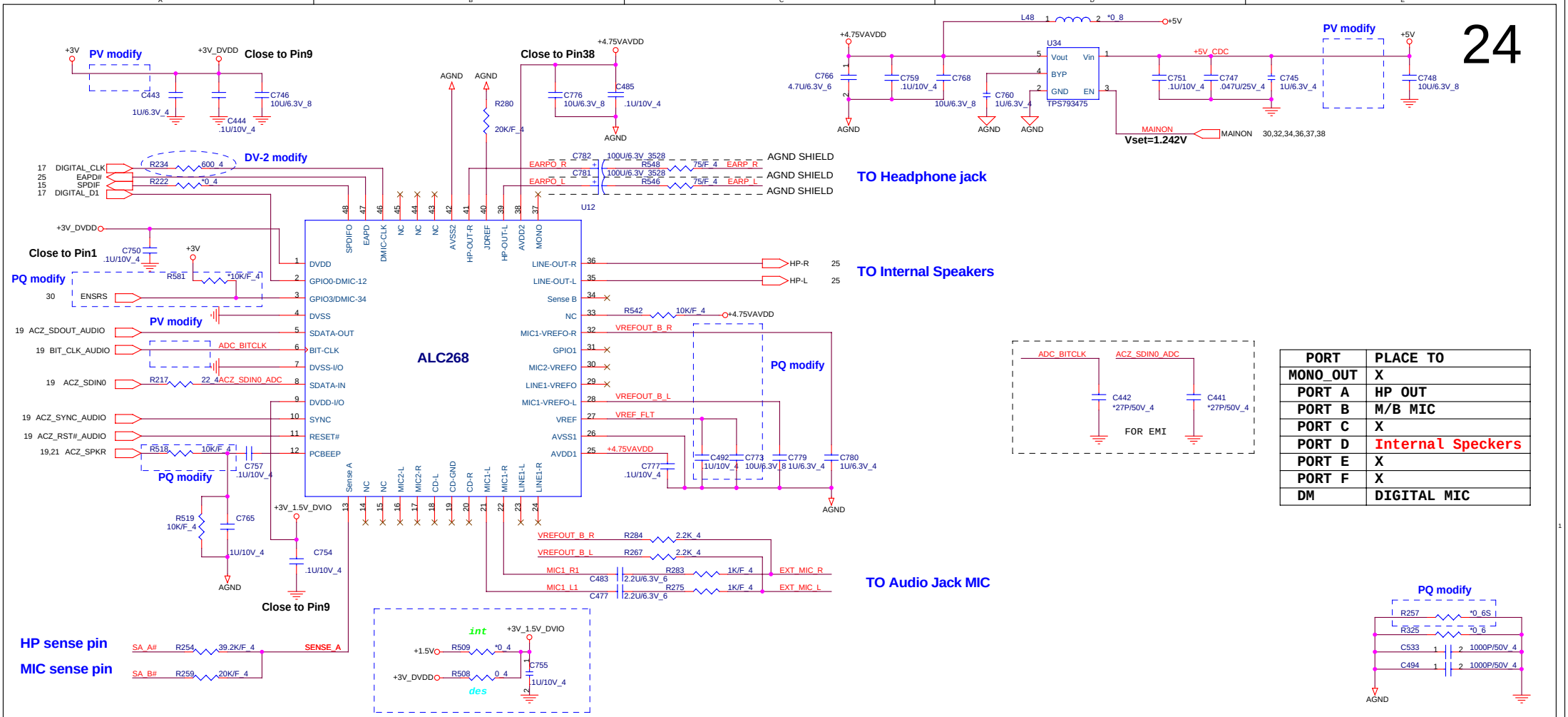

PORT	PLACE TO
MONO_OUT	X
PORT A	HP OUT
PORT B	M/B MIC
PORT C	X
PORT D	Internal Speckers
PORT E	X
PORT F	X
DM	DIGITAL MIC

AUDIO/USB BOARD CONNECTOR

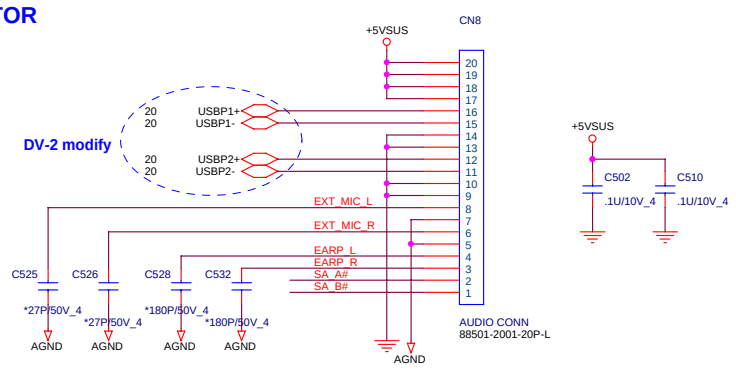

PROJECT : QL6
Quanta Computer Inc.

Size	Document Number	Rev
Custom	Azalia IDT92HD71B7	4A

Date: Thursday, June 05, 2008 Sheet 24 of 40

NB5

AUDIO AMPLIFIER

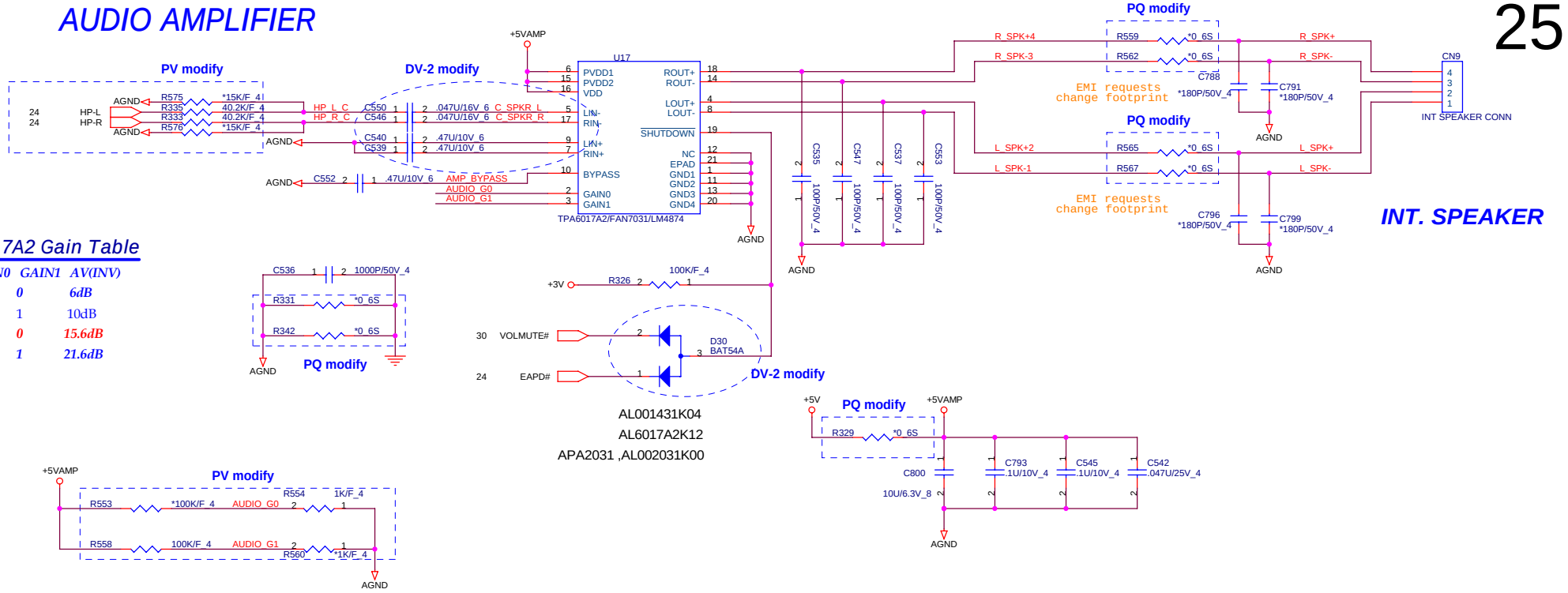

6017A2 Gain Table

GAIN0	GAIN1	AV(INV)
0	0	6dB
0	1	10dB
1	0	15.6dB
1	1	21.6dB

AL001431K04
AL6017A2K12
APA2031 ,AL002031K00

MDC

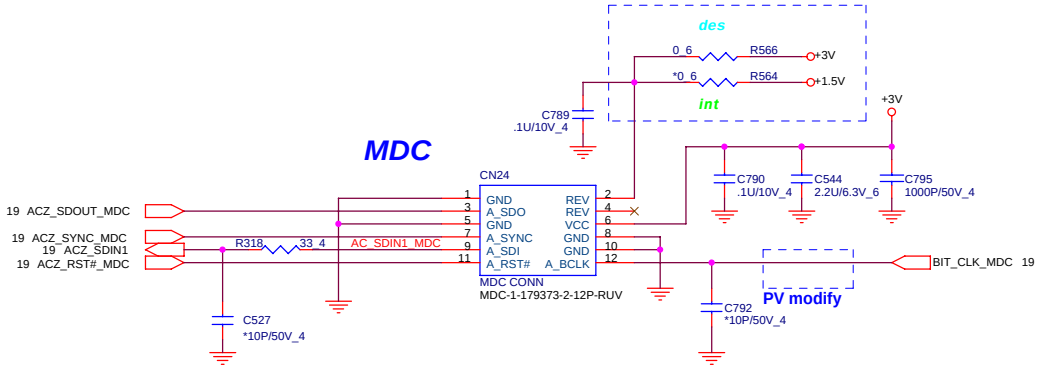

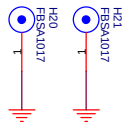

Needs to change Library as ME request

PROJECT : QL6
Quanta Computer Inc.

NB5

Size	Document Number	Rev
Custom	AMP_TPA6017/MDC	4A

Date: Thursday, June 05, 2008 | Sheet 25 of 40

T : Stuffed for RTL8111C(10/100/1000)

E : Stuffed for 8102E(10/100)

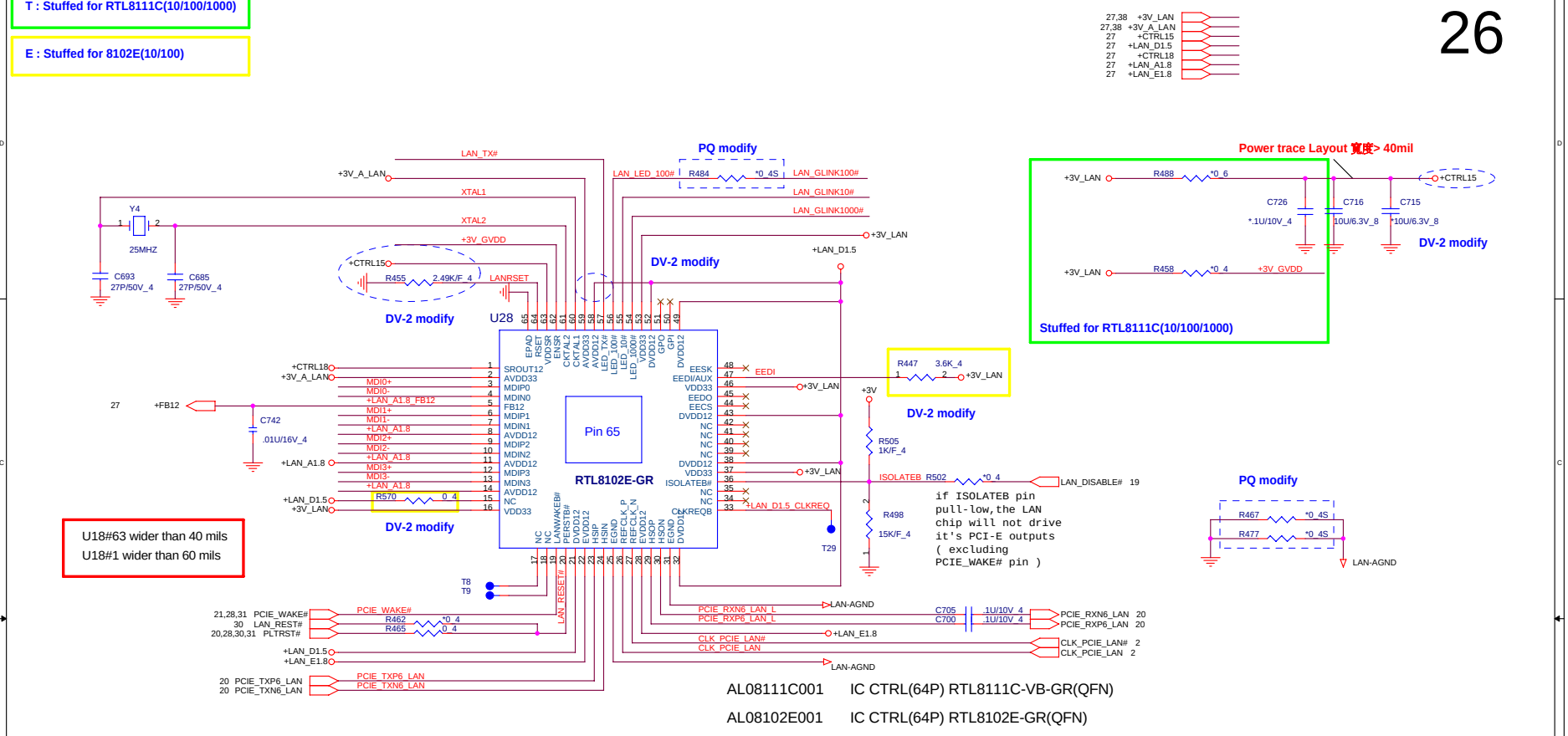

AL08111C001 IC CTRL(64P) RTL8111C-VB-GR(QFN)

AL08102E001 IC CTRL(64P) RTL8102E-GR(QFN)

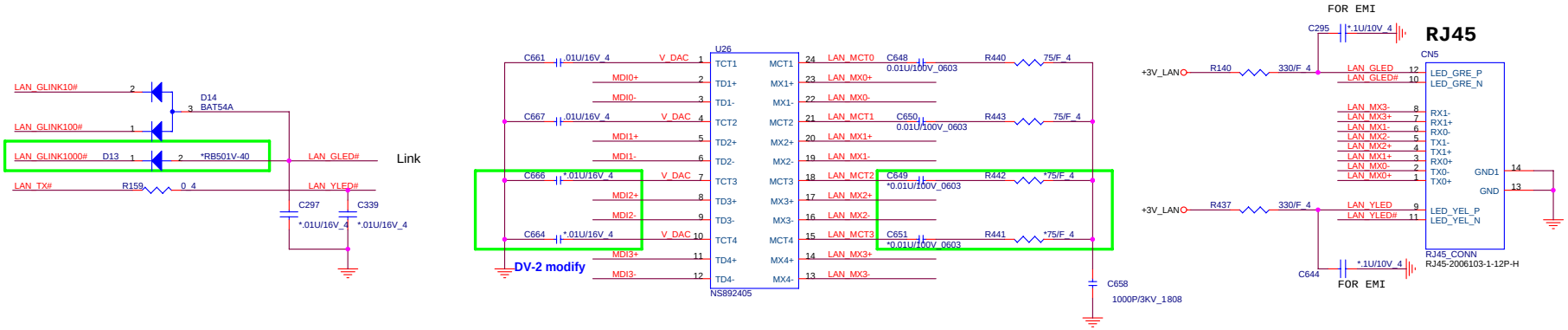

NS892402:GIGABIT DB0AT9LAN05

NS892405:10/100 DB0ZB1LAN04

PROJECT : QL6
Quanta Computer Inc.

NB5

Size	Document Number	Rev
Custom	RTL8111C/8101E/RJ45	4A

Date: Thursday, June 05, 2008 Sheet 26 of 40

T : Stuffed for RTL8111C(10/100/1000)

E : Stuffed for 8102E(10/100)

other

LANVCC
1.2W
364mA

PV modify

+3VLANVCC

C681 4.7U/6.3V_6

C736 .1U/10V_4

Power trace Layout 寬度> 30mil

+3V_LAN

C735 .1U/10V_4 C682 .1U/10V_4 C699 .1U/10V_4 C683 .1U/10V_4

these CAP are for LAN CHIP LANVCC pins--16, 37, 46 and 53.placement close lan chip

PV modify

+3V_A_LAN

C732 .1U/10V_4 C743 *.1U/10V_4

these CAP are for LAN CHIP LAN_A3.3 pins-- 2 and 59.placement close lan chip

8111C CV-4706MN00

8102E CS00004JA40

For Giga must change L65 to Inductor (Chipset include switch power)
+CTRL18 will become to switch power phase

placement close to lan chipset

L43 for Gaga lan use 4.7uH power choke
A>500mA tolerance ±15%

+CTRL18

L43 0_8

DV-2 modify

C688 *10U/6.3V_8 C691 10U/6.3V_8

+FB12 26

L41 *0_8

Power trace Layout 寬度> 30mil

+LAN_A1.8

DV-2 modify

C674 *.1U/10V_4 C676 *.1U/10V_4 C675 *.1U/10V_4

these cap are for lan chip LAN_A1.8 pins-- 8, 11 and 14. placement close chip

+LAN_E1.8

R470 *HCB1608KF-181T15_6

DV-2 modify

C697 *.1U/10V_4 C695 *.1U/10V_4

these cap are for lan chip LAN_D1.8 pins, such as 22 and 28. placement close lan chip

LAN-AGND

L40 *0_8

Power trace Layout 寬度> 30mil

+LAN_D1.5

DV-2 modify

+CTRL15

L39 0_8

C687 .1U/10V_4

DV-2 modify

C677 .1U/10V_4 C702 *.1U/10V_4 C734 *.1U/10V_4 C712 *.1U/10V_4 C733 .1U/10V_4 C710 .1U/10V_4 C711 .1U/10V_4 C692 .1U/10V_4

these cap are for lan chip LAN_D1.5 pins-- 15, 21, 32, 38, 43, 49, 52 and 58.placement close lan chip

Power domain chart

	RTL8111C / RTL8102E
LANVCC	3.3V
LAN_D1.8	1.2V
LAN_A1.8	1.2V
LAN_D1.5	1.2V

NB5

PROJECT : QL6
Quanta Computer Inc.

Size	Document Number	Rev
A3	LAN Power	4A

Date: Thursday, June 05, 2008 Sheet 27 of 40

SATA ODD CONECTOR

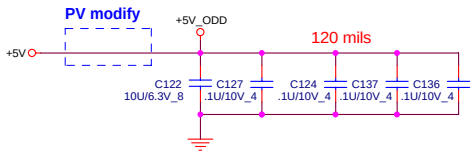

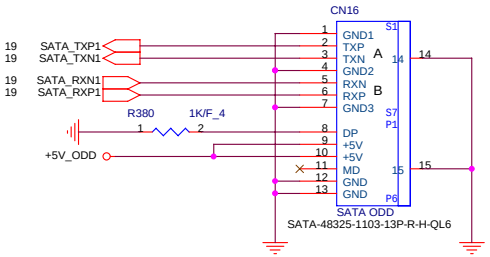

PQ modify footprint

SATA HDD CONNECTOR

DC Current rating: 0.5 A

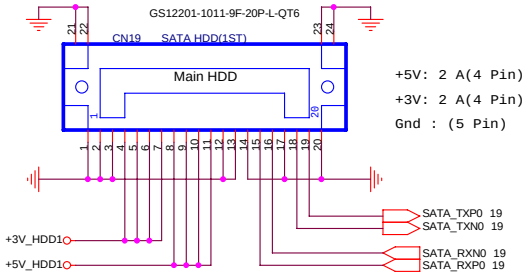

+5V: 2 A(4 Pin)

+3V: 2 A(4 Pin)

Gnd : (5 Pin)

DV-2 modify footprint

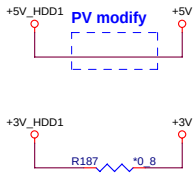

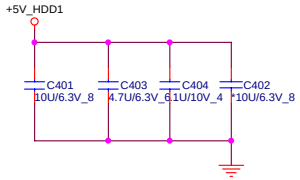

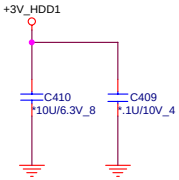

NEWCARD

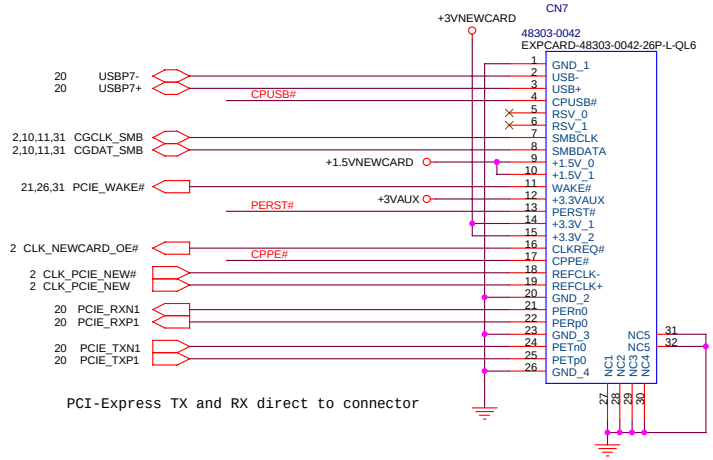

PCI-Express TX and RX direct to connector

EXPCARD-48303-0042-26P-L-QT6 as ME modify Pad size(pin31,32)

DV-2 modify

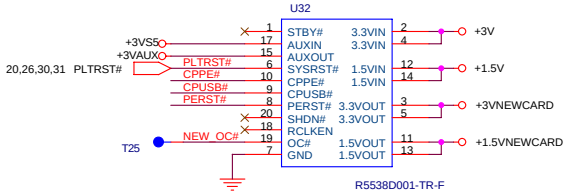

add Pin 21~25 as U32 Thermal pad tied to Gnd

DV-2 modify

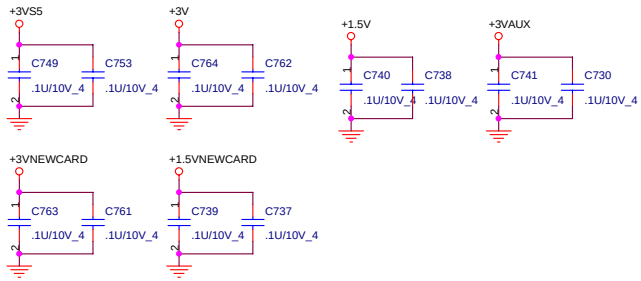

NB5	**PROJECT : QL6** Quanta Computer Inc.	
Size Custom	Document Number **ODD/HDD/NEW CARD**	Rev 4A
Date: Thursday, June 05, 2008	Sheet 28 of 40	

BLUETOOTH POWER

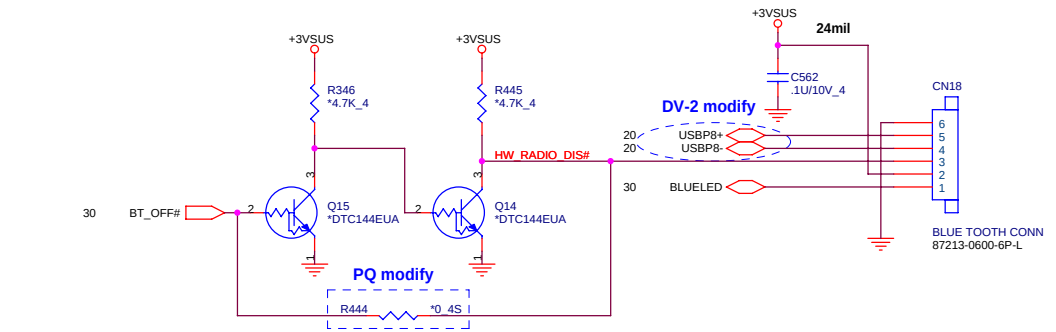

POWER BOTTON CONNECT

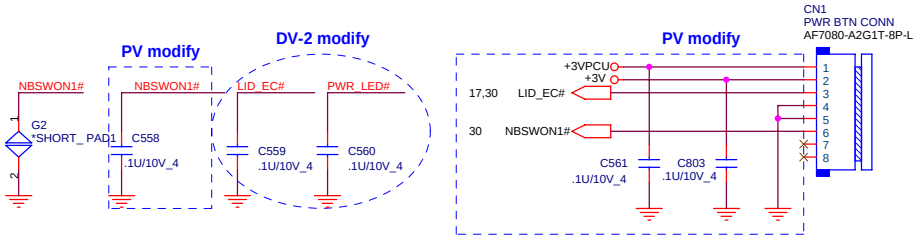

1. +3VPCU
2. N/A
3. LIDSWITCH
4. GND
5. GND
6.POWERON#
7. NA
8. NA

LED

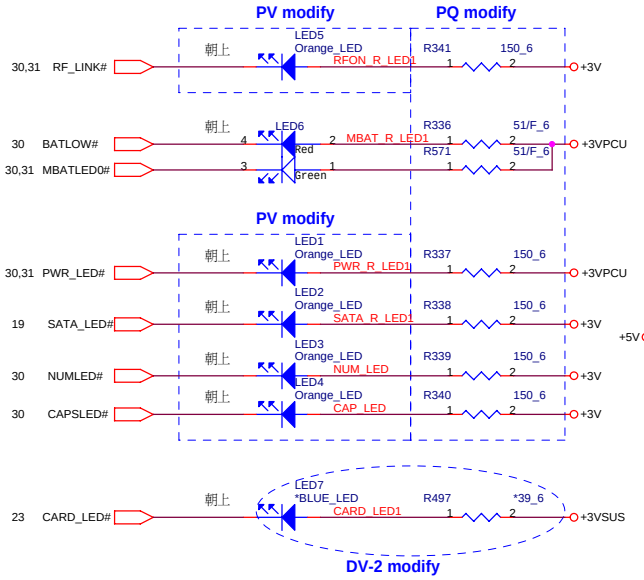

CPU FAN

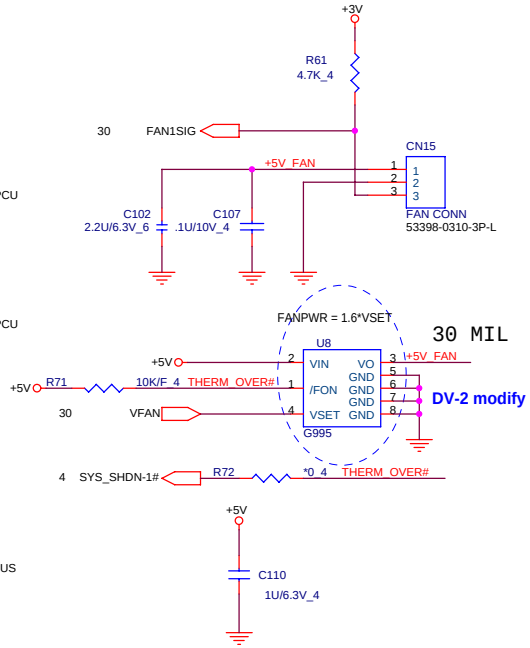

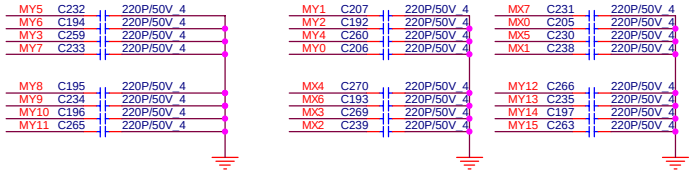

KEYBOARD PULL-UP

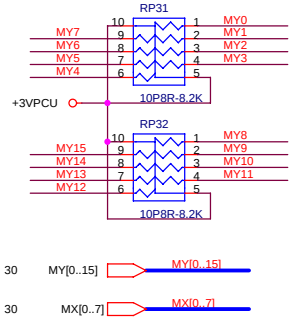

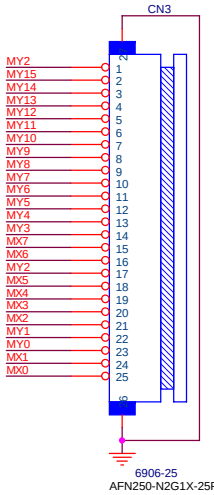

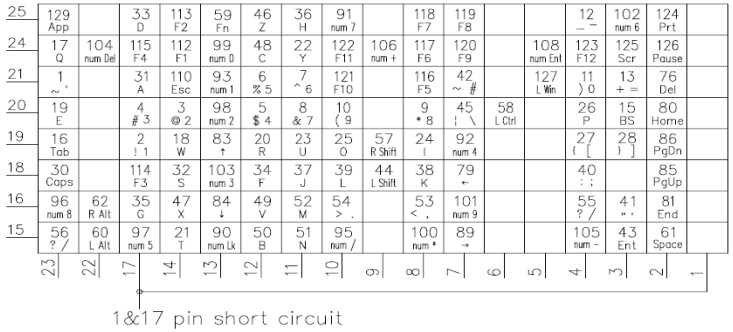

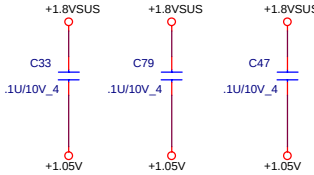

Close to U21 For EMI

NB5

PROJECT : QL6
Quanta Computer Inc.

Size	Document Number	Rev
Custom	KB/FAN/POWER CONN/LED	4A

Date: Thursday, June 05, 2008 Sheet 29 of 40

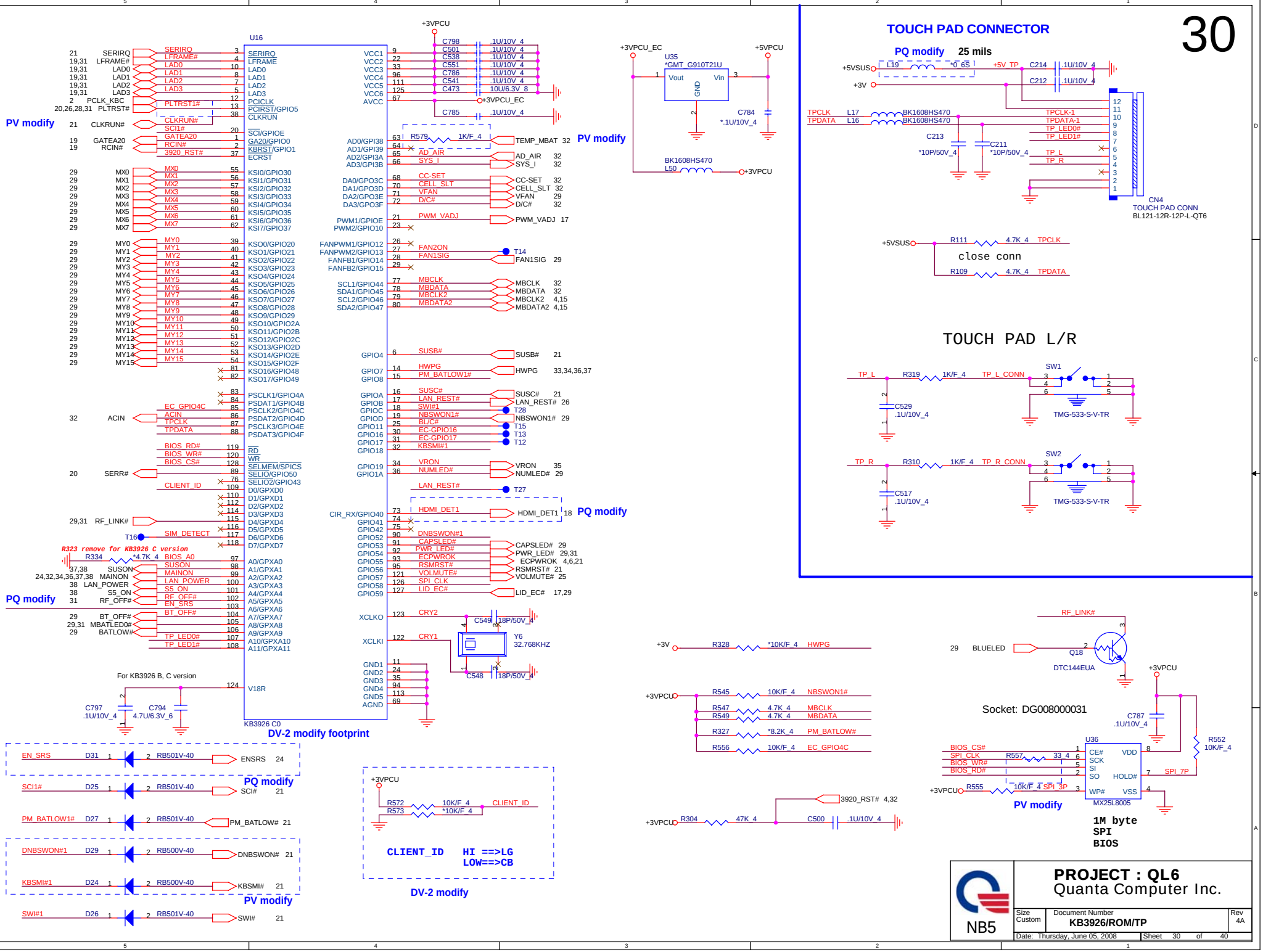
TOUCH PAD CONNECTOR
PQ modify 25 mils
CN4
TOUCH PAD CONN
BL121-12R-12P-L-QT6
close conn
TOUCH PAD L/R
TMG-533-S-V-TR
U16
KB3926 C0
DV-2 modify footprint
PV modify
PQ modify
DV-2 modify
U35
*GMT_G910T21U
Socket: DG008000031
MX25L8005
1M byte
SPI
BIOS
CLIENT_ID HI ==>LG
LOW==>CB
For KB3926 B, C version
R323 remove for KB3926 C version
PROJECT : QL6
Quanta Computer Inc.
NB5
Size Custom
Document Number KB3926/ROM/TP
Rev 4A
Date: Thursday, June 05, 2008
Sheet 30 of 40

Mini PCI-E Card 1
WLAN

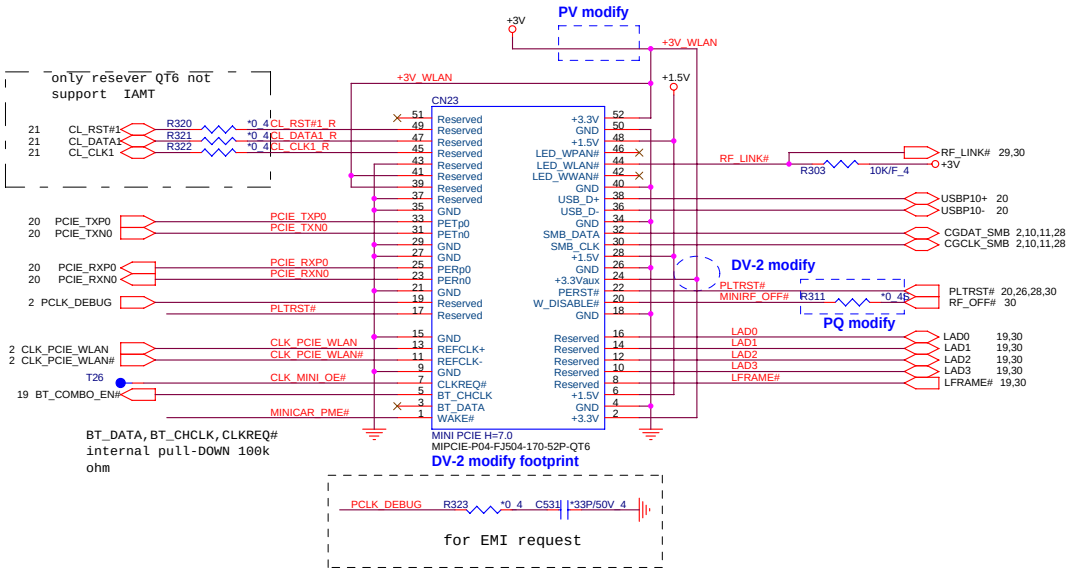

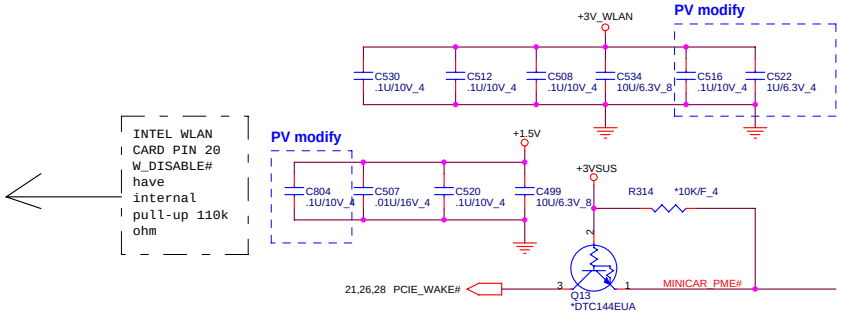

Mini PCI-E Card 2
ROBSON

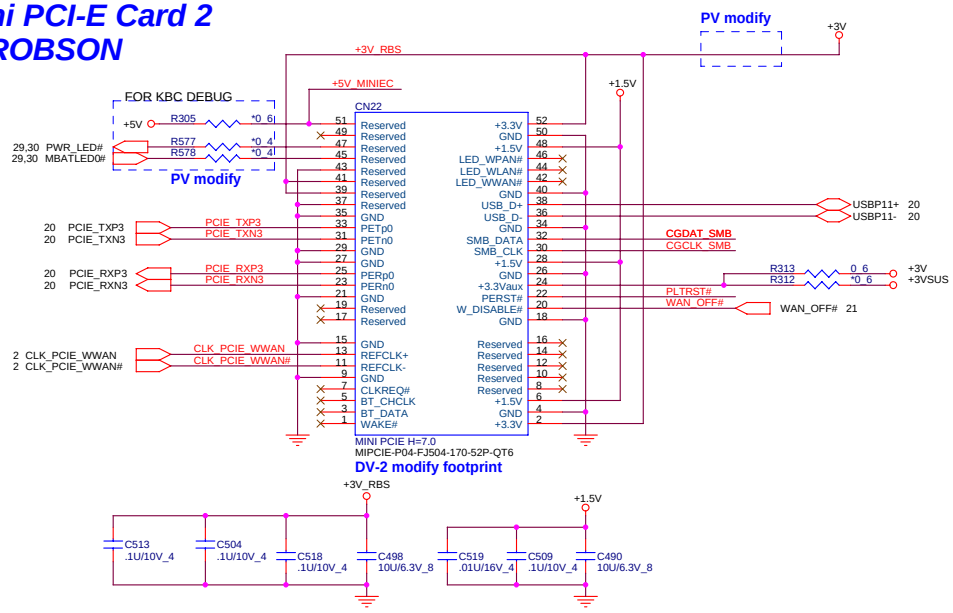

E-SATA/USB COMBO

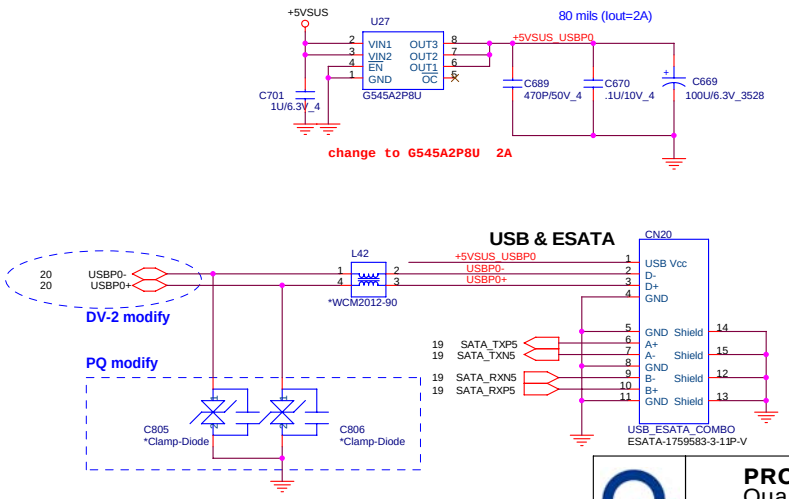

NB5	**PROJECT : QL6** Quanta Computer Inc.	
Size Custom	Document Number **MINI PCIE CONN X2/E-SATA**	Rev 4A
	Date: Thursday, June 05, 2008	Sheet 31 of 40

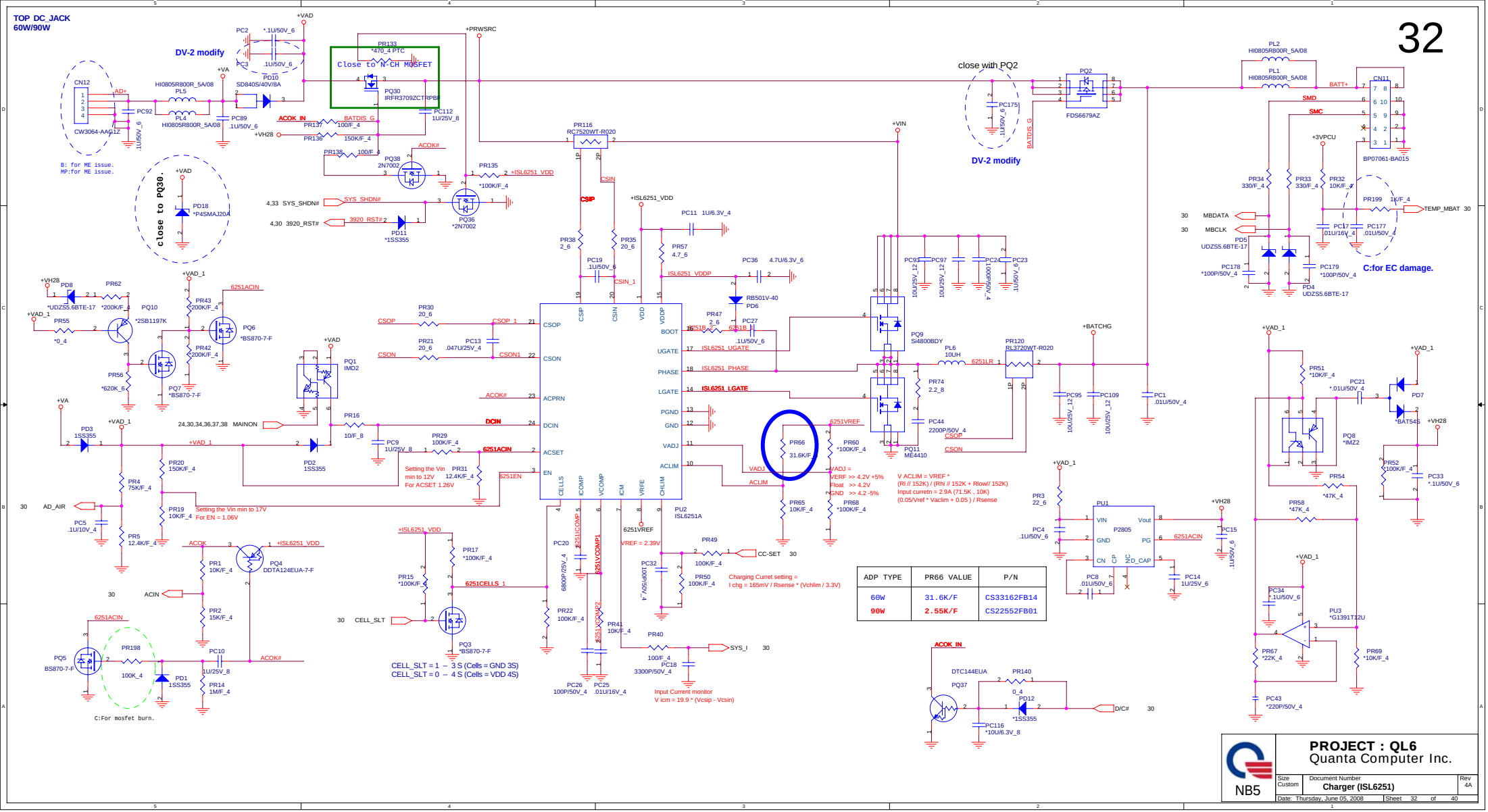

ADP TYPE	PR66 VALUE	P/N
60W	31.6K/F	CS33162FB14
90W	2.55K/F	CS22552FB01

DC/DC +3V_ALW/+5V_ALW/+5V_ALW2 /+12V_ALW

33

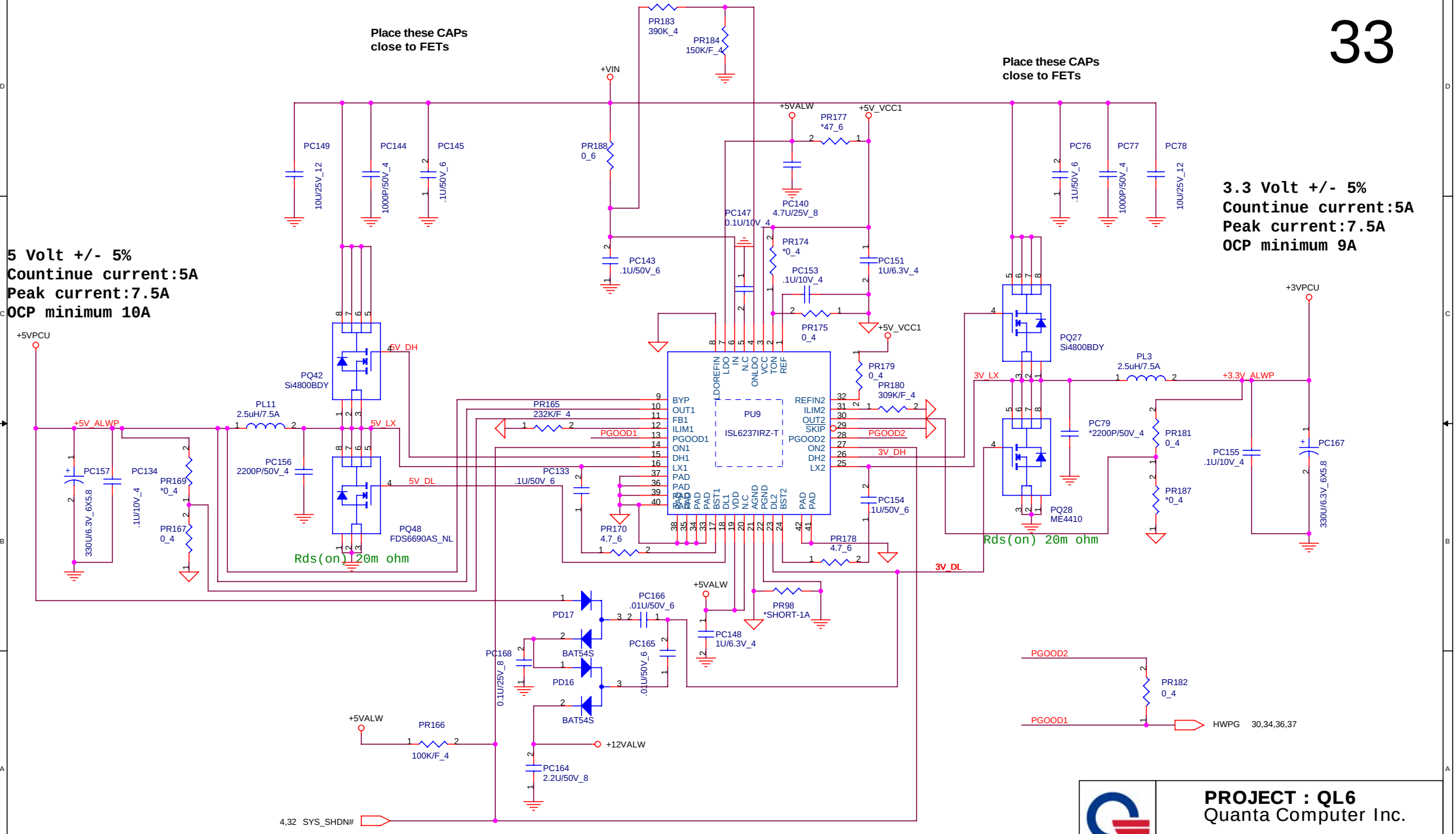

NB5

PROJECT : QL6
Quanta Computer Inc.

Size	Document Number	Rev
B	+5V/+3V (ISL6237)	4A

Date: Thursday, June 05, 2008 | Sheet 33 of 40

VCCP1.05V & +1.5V

+1.05Volt +/- 5%
Countinue current:7.5A
Peak current:10A
OCP minimum 15A

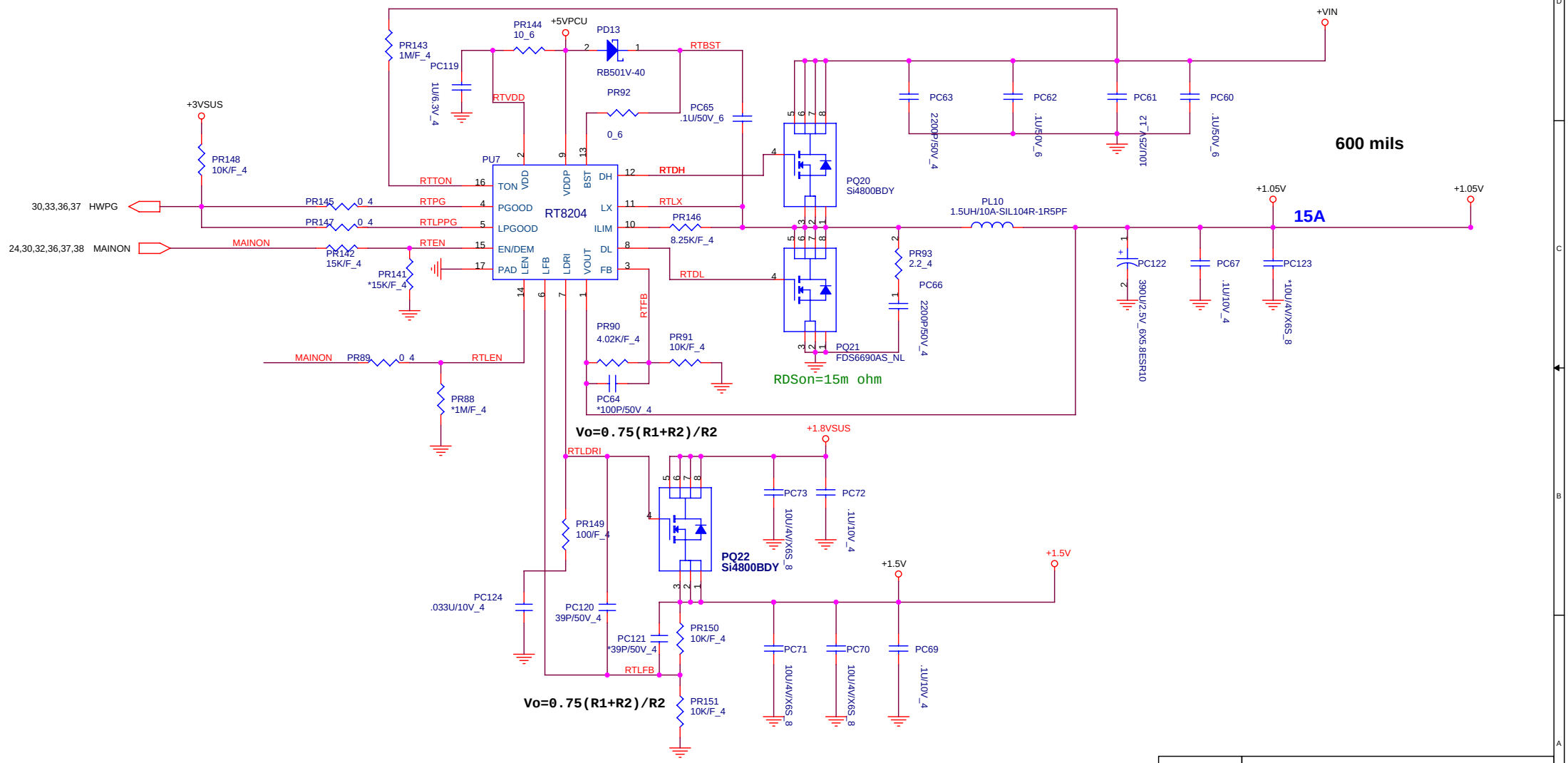

NB5

PROJECT : QL6
Quanta Computer Inc.

Size	Document Number	Rev
B	+1.05V/+1.5V (RT8204)	4A

Date: Thursday, June 05, 2008 | Sheet 34 of 40

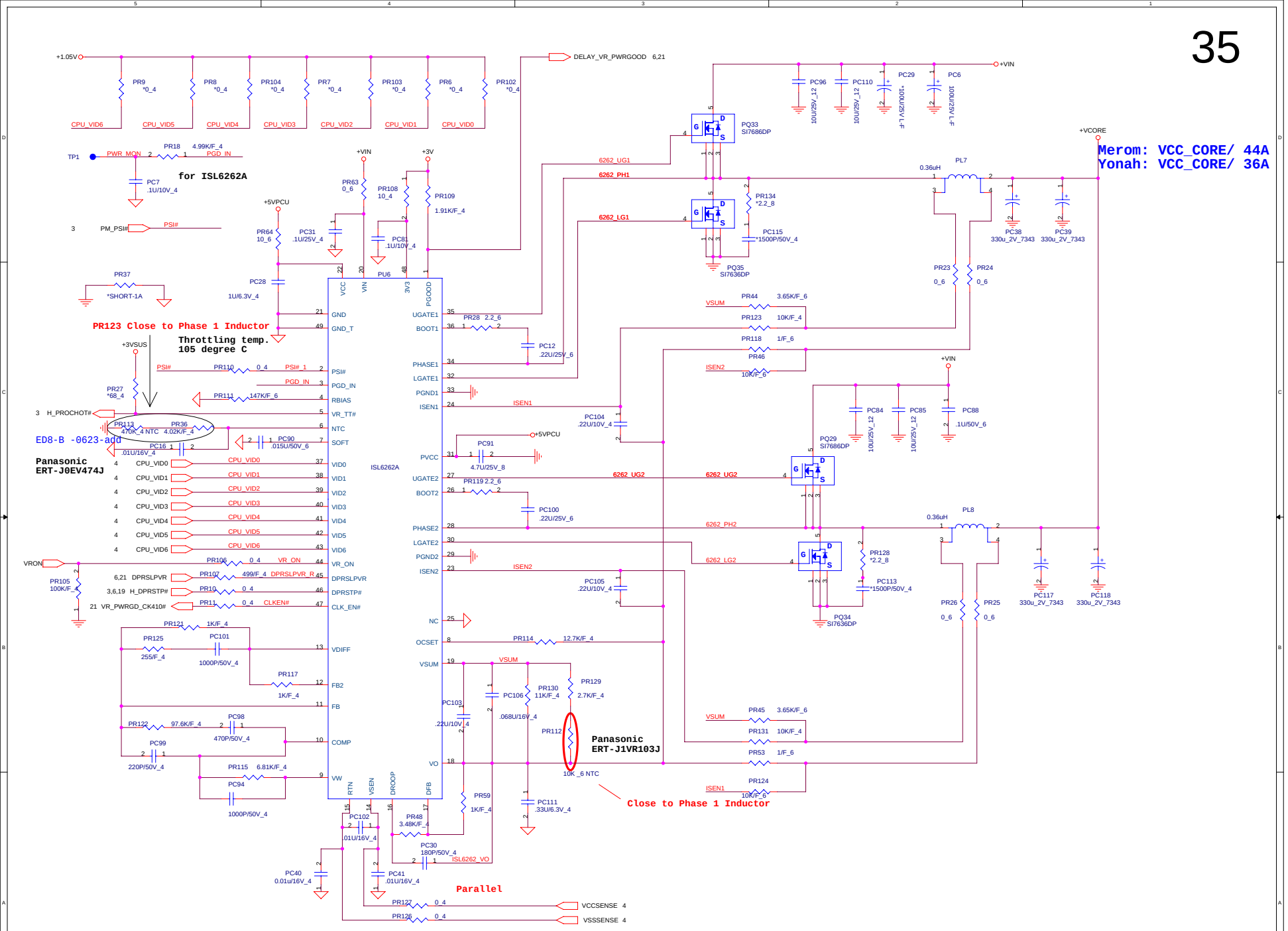

PROJECT : QL6
Quanta Computer Inc.

Size	Document Number	Rev
Custom	CPU Core (ISL6266A)	4A

NB5

Date: Thursday, June 05, 2008 Sheet 35 of 40

VGA Core & VCC1.1

+1.1Volt +/- 5%
Countinue current:15A
Peak current:17A
OCP minimum 22A

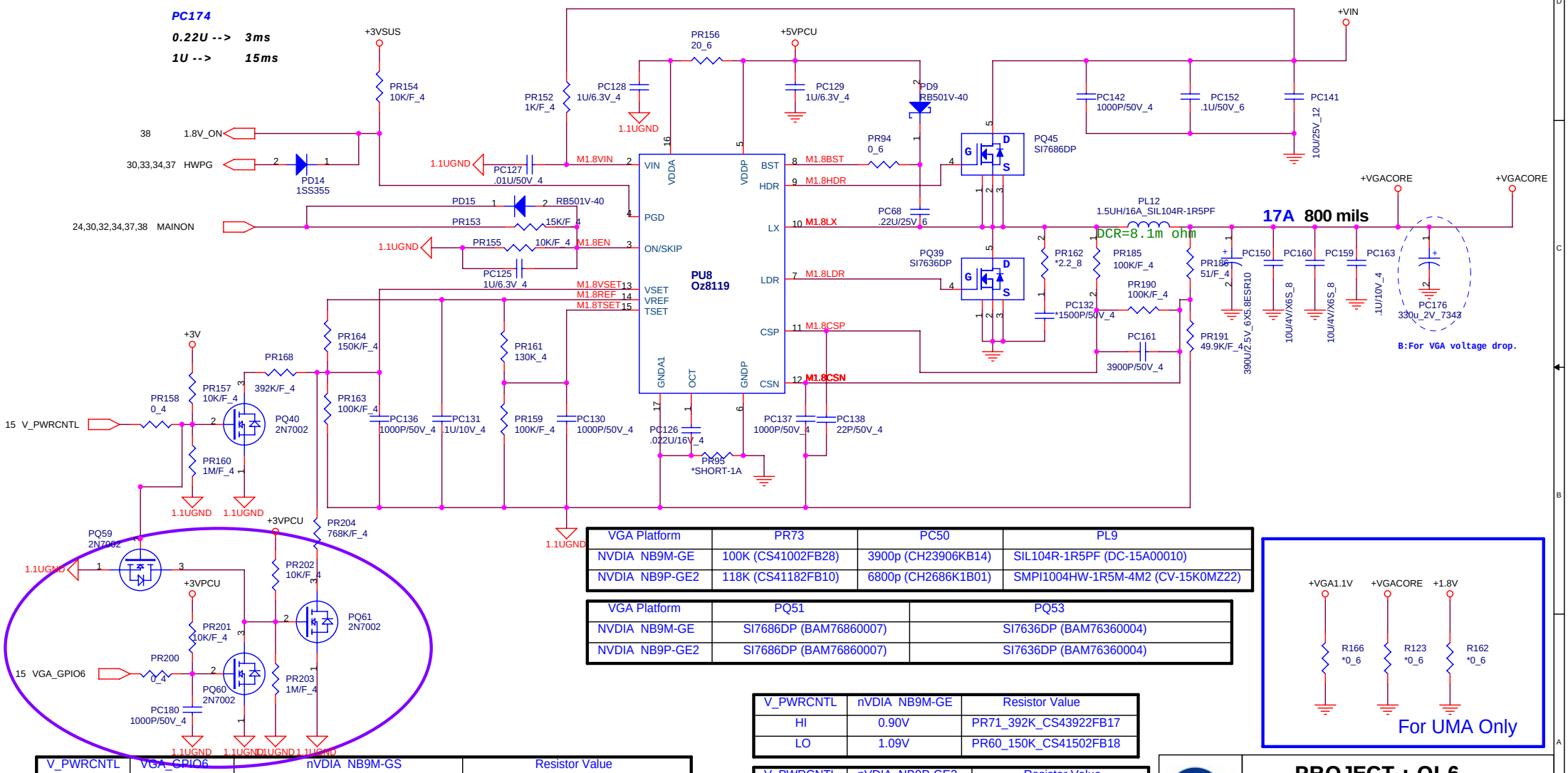

VGA Platform	PR73	PC50	PL9
NVDIA NB9M-GE	100K (CS41002FB28)	3900p (CH23906KB14)	SIL104R-1R5PF (DC-15A00010)
NVDIA NB9P-GE2	118K (CS41182FB10)	6800p (CH2686K1B01)	SMPI1004HW-1R5M-4M2 (CV-15K0MZ22)

VGA Platform	PQ51	PQ53
NVDIA NB9M-GE	SI7686DP (BAM76860007)	SI7636DP (BAM76360004)
NVDIA NB9P-GE2	SI7686DP (BAM76860007)	SI7636DP (BAM76360004)

V_PWRCNTL	nVDIA NB9M-GE	Resistor Value
HI	0.90V	PR71_392K_CS43922FB17
LO	1.09V	PR60_150K_CS41502FB18

V_PWRCNTL	nVDIA NB9P-GE2	Resistor Value
HI	0.9V	PR71_560K_CS45602FB04
LO	1.0V	PR60_174K_CS41182FB10

V_PWRCNTL	VGA_GPIO6	nVDIA NB9M-GS	Resistor Value
LO	LO	1.09V	PR?_768K_CS47682FB10
LO	HI	1.17V	PR60_133K_CS41332FB06
HI	LO	0.90V	PR71_196K_CS41962FB01
HI	HI	0.90V	

NB5

PROJECT : QL6
Quanta Computer Inc.

Size	Document Number	Rev
B	VGA CORE OZ8118	4A

Date: Thursday, June 05, 2008 Sheet 36 of 40

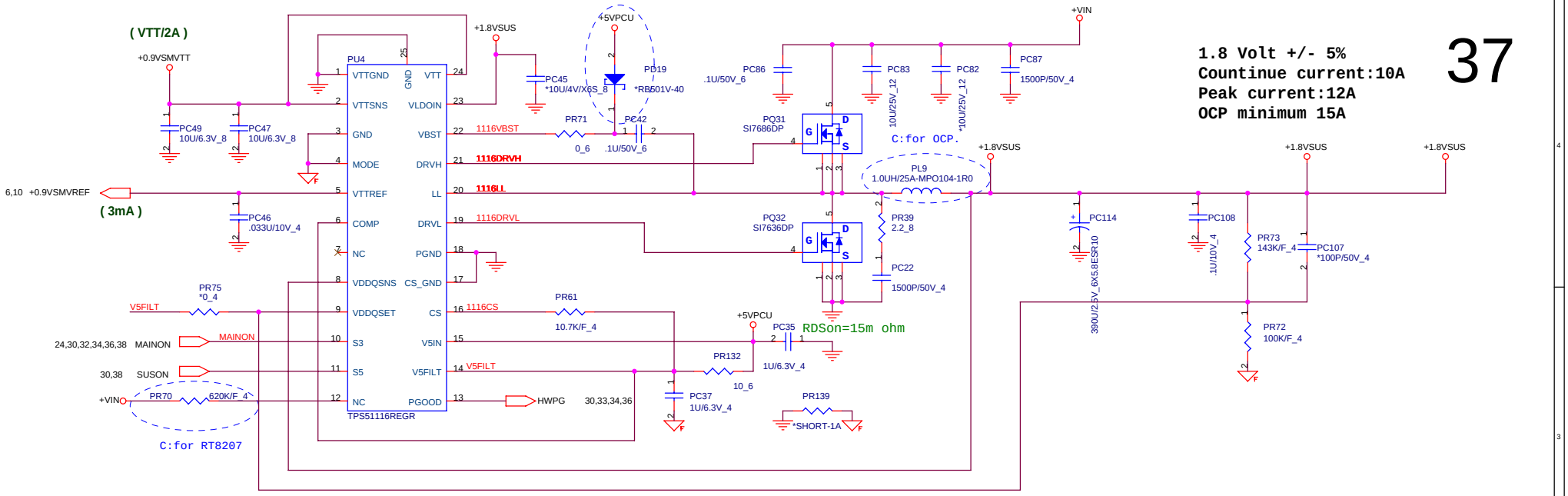

1.8 Volt +/- 5%
Countinue current:10A
Peak current:12A
OCP minimum 15A

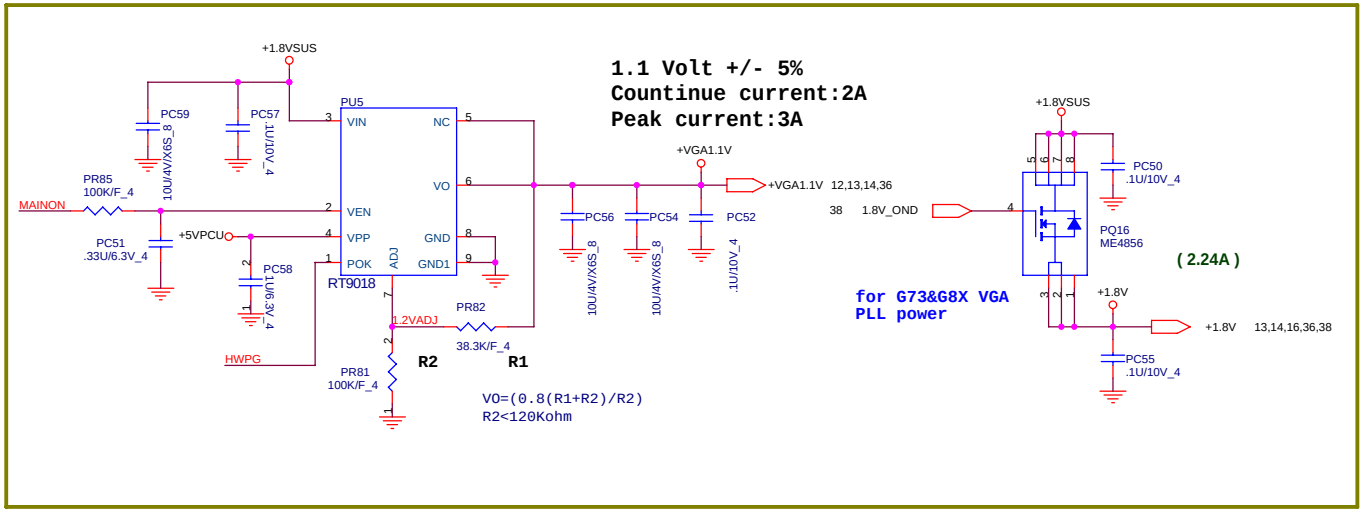

1.1 Volt +/- 5%
Countinue current:2A
Peak current:3A

for G73&G8X VGA PLL power

VO=(0.8(R1+R2)/R2)
R2<120Kohm

NB5

PROJECT : QL6
Quanta Computer Inc.

Size	Document Number	Rev
Custom	1.8V/DDR_VTER/+1.8v/+1.1V	4A

Date: Thursday, June 05, 2008 Sheet 37 of 40

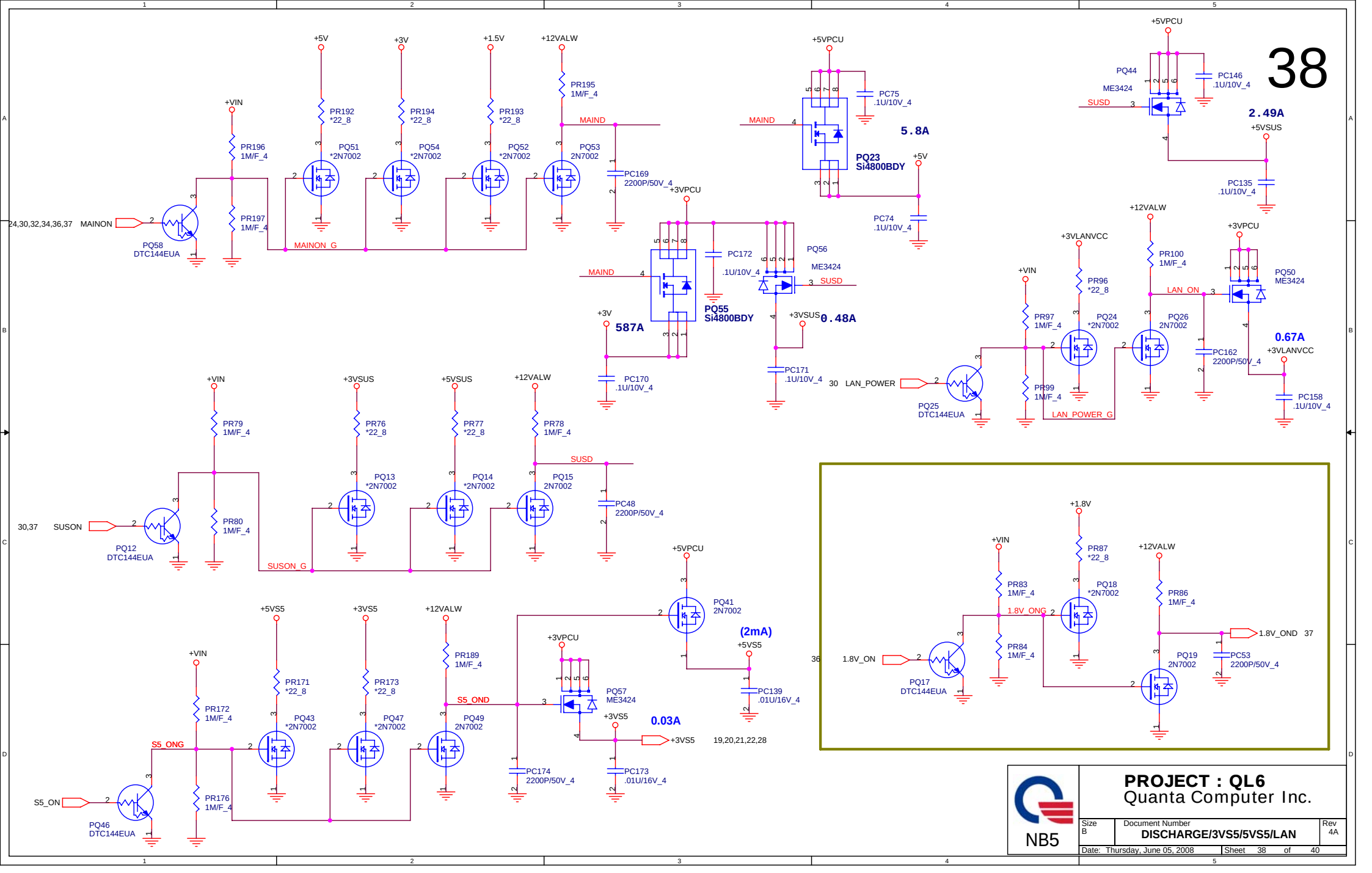

PROJECT : QL6
Quanta Computer Inc.

NB5

Size	Document Number	Rev
B	DISCHARGE/3VS5/5VS5/LAN	4A

Date: Thursday, June 05, 2008 | Sheet 38 of 40

		AC MODE				DC MODE			
	Voltage level	S0	S3	S4	S5	S0	S3	S4	S5
+3VPCU	3.3V +/- 5%	V	V	V	V	V	V	V	V
+5VPCU	5V +/- 5%	V	V	V	V	V	V	V	V
+3VRTC	3.3V +/- 5%	V	V	V	V	V	V	V	V
+3VS5	3.3V +/- 5%	V	V	V	V	V	V		
+5VS5	5V +/- 5%	V	V	V	V	V	V		
+3VSUS	3.3V +/- 5%	V	V			V	V		
+5VSUS	5V +/- 5%	V	V			V	V		
+1.8VSUS	1.8V +/- 5%	V	V			V	V		
+0.9VSMVTT	0.9V +/- 5%	V	V			V	V		
+1.5V	1.5V +/- 5%	V				V			
+1.05V	1.05V +/- 5%	V				V			
+VCORE	0.9~1.15V	V				V			
+VGA_CORE	0.9~1.2V	V				V			
+VGA1.1V	1.1V +/- 5%	V				V			
+1.8V	1.8V +/- 5%	V				V			
+3VLANVCC	3.3V +/- 5%	V				V			