Beyonce UMA Schematics Document

uFCPGA Mobile Merom

Intel Crestline-GM + ICH8M

2008-02-21

REV : -2 (DELL:A00)

DB5

Wistron Corporation
21F, 88, Sec.1, Hsin Tai Wu Rd., Hsichih,
Taipei Hsien 221, Taiwan, R.O.C.

Title	Beyonce UMA	
Size A3	Document Number COVER PAGE	Rev -3
Date: Friday, February 22, 2008	Sheet 1 of 46	

Beyonce UMA Block Diagram

Project code:91.4C301.001
PCB P/N :06253
REVISION :-1

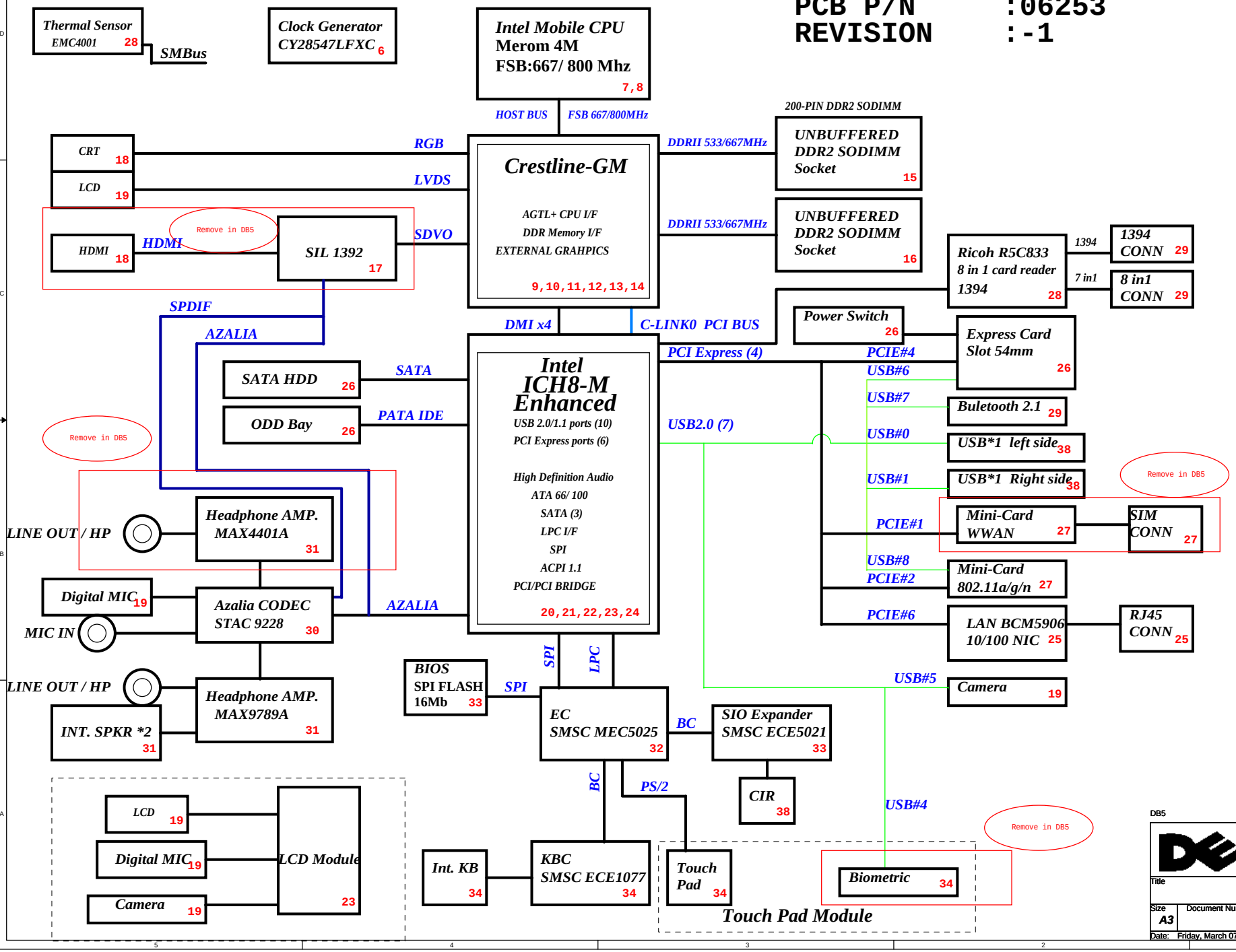

System DC/DC TPS51120	41
INPUTS	OUTPUTS
+PWR_SRC	+5V_ALW +5V_SUS +3.3V_SUS +3.3V_RTC_LDO

System DC/DC TPS51124	42
+PWR_SRC	+1.05V_VCCP +1.5V_RUN

DDR2 DC/DC TPS51117	43
+PWR_SRC	+1.8V_SUS

LDO TPS51100	43
+1.8V_SUS	+0.9V_DDR_VTT V_DDR_MCH_REF

LDO SC339SKTRT	44
+PWR_SRC	+1.25V_RUN

Battery Charger MAX8731	38
INPUTS	OUTPUTS
+PWR_SRC	+VCHGR

CPU DC/DC ISL6260C	39,40
INPUTS	OUTPUTS
+PWR_SRC	+VCC_CORE

PCB LAYER

L1:TOP
L2:GND
L3:Signal
L4:Signal
L5:VCC
L6:Signal
L7:GND
L8:BOT

DB5

Wistron Corporation
21F, 88, Sec.1, Hsin Tai Wu Rd., Hsichih, Taipei Hsien 221, Taiwan, R.O.C.

Title: Beyonce UMA
Size: A3 | Document Number: BLOCK DIAGRAM | Rev: -3
Date: Friday, March 07, 2008 | Sheet 2 of 46

ICH8 SMBus Block Diagram

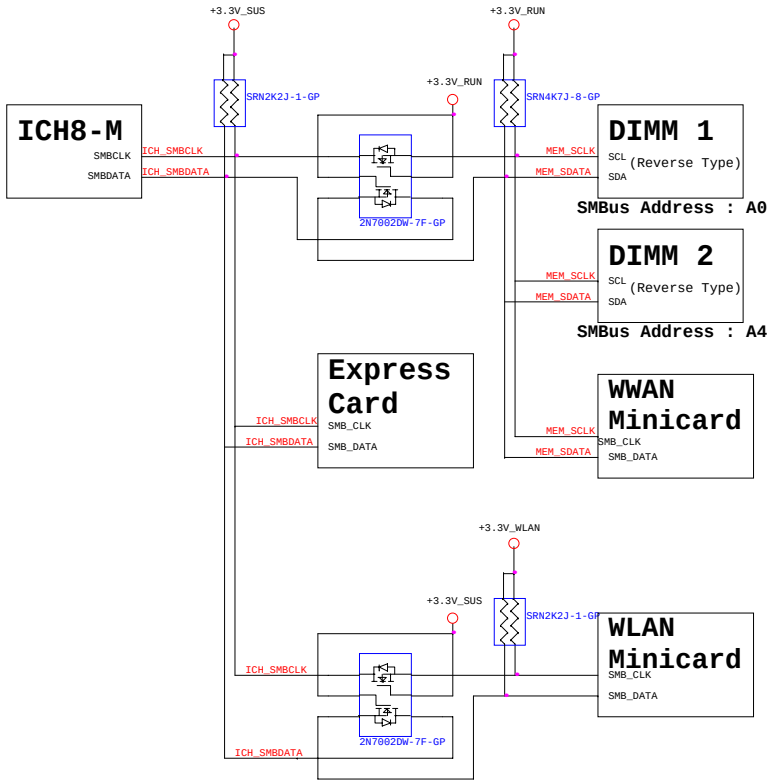

KBC SMBus Block Diagram

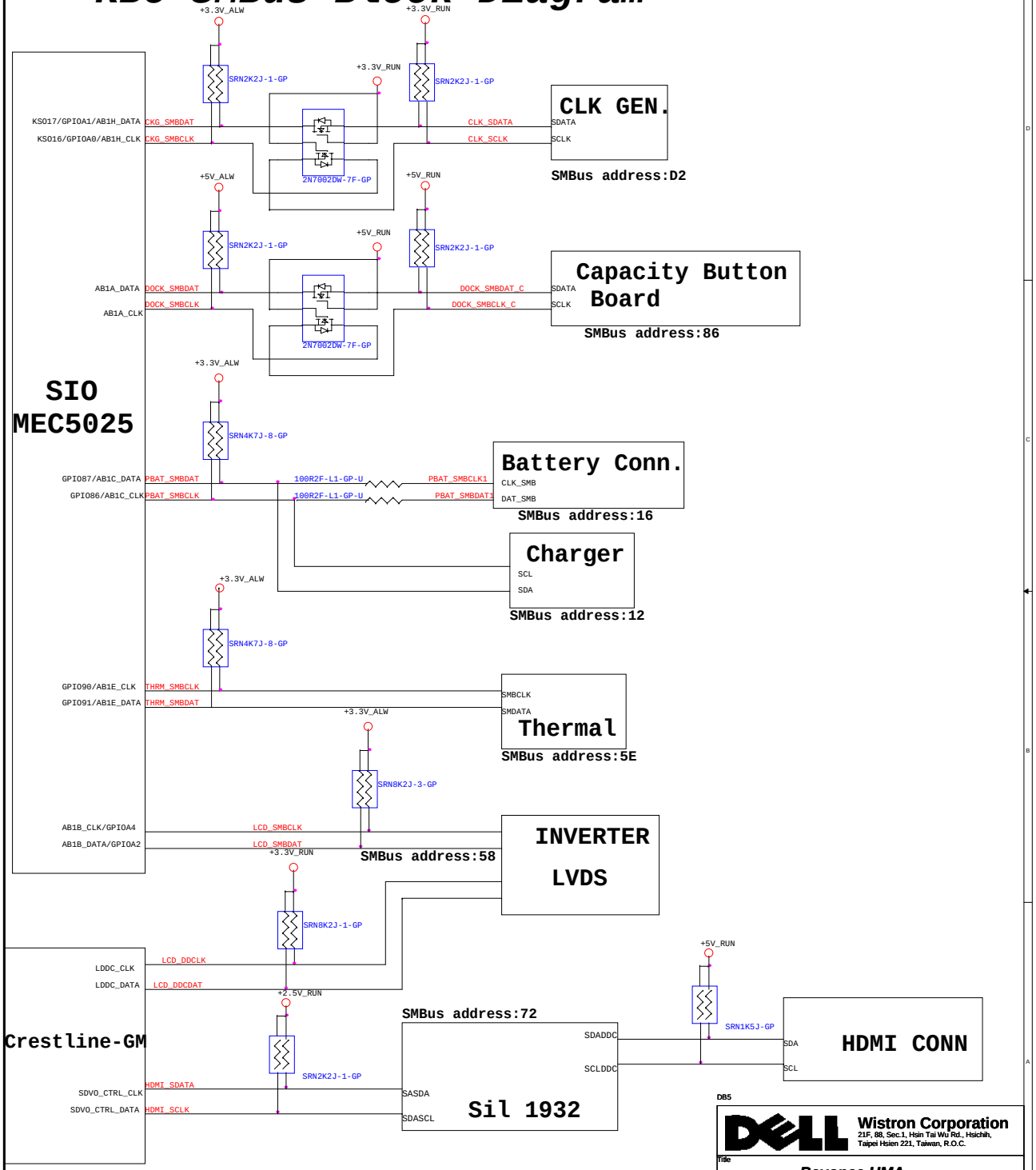

DB5

Wistron Corporation
21F, 88, Sec.1, Hsin Tai Wu Rd., Hsichih,
Taipei Hsien 221, Taiwan, R.O.C.

Title		
Beyonce UMA		
Size C	Document Number SMBus Block Diagram	Rev -3
Date: Friday, February 22, 2008	Sheet 3 of 46	

CLOCK GEN CY28547

27M_SS/LCD96_100M SELECTION TABLE

BYTE 10

Bit5 S1	Bit4 S0	Spread Spectrum S[1:0]
0	0	-0.5%(Default)
0	1	-1.0%
1	0	-1.5%
1	1	-2.0%

BYTE 15 IO_VOUT[2,1,0]

Bit2 IO_VOUT2	Bit1 IO_VOUT1	Bit0 IO_VOUT0	IO_VOUT[2,1,0]
0	0	0	0.3V
0	0	1	0.4V
0	1	0	0.5V
0	1	1	0.6V
1	0	0	0.7V
1	0	1	0.8V(Default)
1	1	0	0.9V
1	1	1	1.0V

PIN34 FCTSEL1	0 UMA	1 DISC.
PIN43	DOT96T	27M_NonSpread
PIN44	DOT96C	27M_Spread
PIN47	LCD100/96T	SRCT_0
PIN48	LCD100/96C	SRCC_0

SEL2 FSC	SEL1 FSB	SEL0 FSA	CPU	FSB
1	0	1	100M	X
0	0	1	133M	X
0	1	1	166M	667M
0	1	0	200M	800M

INTEL CRESTLINE STRAP PIN

* is Default setting

CFG Strap	Low	High
CFG 5	DMI X 2	DMI X 4 *
CFG 6	Moby Dick	Calistoga *
CFG 7	DT/Transportable CPU	Mobile CPU *
CFG 9	Reserved Lane	Normal Operation *
CFG 10	Reserved	Mobility *
CFG 11	Calistoga *	Reserved
CFG 16 FSB Dynamic ODT	Disabled	Enabled *
CFG 18 VCC Select	1.05V *	1.5V
CFG 19 DMI Lane Reserved	Normal Operation *	Reserved Lane
CFG 20 PCIE/SDVO Select	Only PCIE or SDVO is operation *	PCIE and SDVO are operation simu
SDVO_CTRLDATA	No SDVO Device present *	SDVO Device present

	CFG[13:12]
LL	Reserved
LH	XOR Mode Enabled
HL	All Z Mode Enabled
HH	Normal Operation *

PCIE Routing

LANE1	MiniCard WWAN
LANE2	MiniCard WLAN
LANE3	No use
LANE4	Express Card
LANE5	No use
LANE6	10/100 LOM

PCI ROUTING

	IDSEL	INT	REQ	GNT
1394/ MediaCard	AD17	C D	1	1

ICH USB TABLE

USB0	USB1
USB1	USB2
USB2	
USB3	
USB4	Biometric
USB5	Camera
USB6	Express Card
USB7	BT
USB8	
USB9	MINI Card WWAN

INTEL ICH8-M STRAP PIN

Signal	Usage/When Sampled	Comment
HDA_SDOUT	XOR Chain Entrance/ PCIE Port Config 1 bit1, Rising Edge of PWROK	Allows entrance to XOR Chain testing when TP3 pulled low at rising edge of PWROK.When TP3 not pulled low at rising edge of PWROK,sets bit1 of RPC.PC(Config Registers:offset 224h)
HDA_SYNC	PCIE Port Config 1 bit0, Rising Edge of PWROK.	Sets bit0 of RPC.PC(Config Registers:Offset 224h)
GNT2#	PCIE Port Config 2 bit0, Rising Edge of PWROK.	Sets bit2 of RPC.PC(Config Registers:Offset 224h)
GPIO20	Reserved	Weak Internal PULL-DOWN.NOTE:This signal should not be pull HIGH.
GNT3#	Top-Block Swap Override. Rising Edge of PWROK.	Sampled low:Top-Block Swap mode(inverts A16 for all cycles targeting FWH BIOS space). Note: Software will not be able to clear the Top-Swap bit until the system is rebooted without GNT3# being pulled down.
GNT0# SPI_CS1#	Boot BIOS Destination Selection. Rising Edge of PWROK.	Controllable via Boot BIOS Destination bit (Config Registers:Offset 3410h:bit 11:10). GNT0# is MSB, 01-SPI, 10-PCI, 11-LPC.
INTVRMEN	Integrated VccSus1_05 VccSus1_5 and VccCL1_5 VRM Enable/Disable.Always sampled.	Enables integrated VccSus1_05,VccSus1_5 and VccCL1_5 VRM when sampled high
LAN100_SLP	Integrated VccLAN1_05 VccCL1_05 VRM enable /Disable. Always sampled.	Enables integrated VccLAN1_05,VccCL1_05 VRM when sampled high
SATALED#	PCIE LAN REVERSAL.Rising Edge of PWROK.	This signal has weak internal pull-up. set bit27 of MPC.LR(Device28:Function0:Offset D8)
SPKR	No Reboot. Rising Edge of PWROK.	If sampled high, the system is strapped to the "No Reboot" mode(ICH8M will disable the TCO Timer system reboot feature). The status is readable via the NO REBOOT bit.(Offset:3410h:bit5)
TP3	XOR Chain Entrance. Rising Edge of PWROK.	This signal should not be pull low unless using XOR Chain testing.
GPIO33/ HDA_DOCK_EN#	Flash Descriptor Security Override Strap Rising Edge of PWROK.	Internal Pull-Up.If sampled low,the Flash Descriptor Security will be overidden.if high,the Security measures defined in the Flash Descriptor will be in effect. This should only be used in manufacturing environments

XOR Chain Entrance Strap

ICH_RSVD	tp3	AZ_DOUT_ICH	Description
0		0	RSVD
0		1	Enter XOR Chain
1		0	Normal Operation(default)
1		1	Set PCIE port cofig bit1

A16 swap override strap

PCI_GNT#3	
	low = A16 swap override enable
	high = default

BOOT BIOS Strap

PCI_GNT#0	SPI_CS#1	BOOT BIOS Location
0	1	SPI
1	0	PCI
1	1	LPC(Default)

integrated VccSus1_05,VccSus1_5,VccCL1_5

SM_INTVRMEN	High=Enable	Low=Disable

integrated VccLan1_05VccCL1_05

LAN100_SLP	High=Enable	Low=Disable

DEFAULE HIGH

No Reboot Strap

SPKR	LOW = Defaule
	High=No Reboot

8.2K PULL HIGH

INTEL ICH8-M INTEGRATED PULL-UPS and PULL-DOWNS

SIGNAL	Resistor Type/Value
HDA_BIT_CLK	PULL-DOWN 20K
HDA_RST#	NONE
HDA_SDIN[3:0]	PULL-DOWN 20K
HDA_SDOUT	PULL-DOWN 20K
HDA_SYNC	PULL-DOWN 20K
GNT[3:0]	PULL-UP 20K
GPIO[20]	PULL-DOWN 20K
LDA[3:0]#/FHW[3:0]#	PULL-UP 20K
LAN_RXD[2:0]	PULL-UP 20K
LDRQ[0]	PULL-UP 20K
LDRQ[1]/GPIO23	PULL-UP 20K
PME#	PULL-UP 20K
PWRBTN#	PULL-UP 20K
SATALED#	PULL-UP 20K
SPI_CS1#	PULL-UP 20K
SPI_CLK	PULL-UP 20K
SPI_MOSI	PULL-UP 20K
SPI_MISO	PULL-UP 20K
TACH_[3:0]	PULL-UP 20K
SPKR	PULL-DOWN 20K
TP[3]	PULL-UP 20K
USB[9:0][P,N]	PULL-DOWN 15K
CL_RST#	TBD

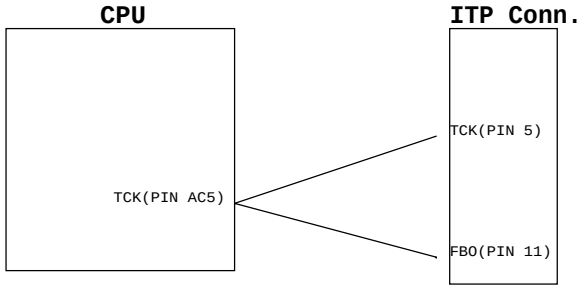

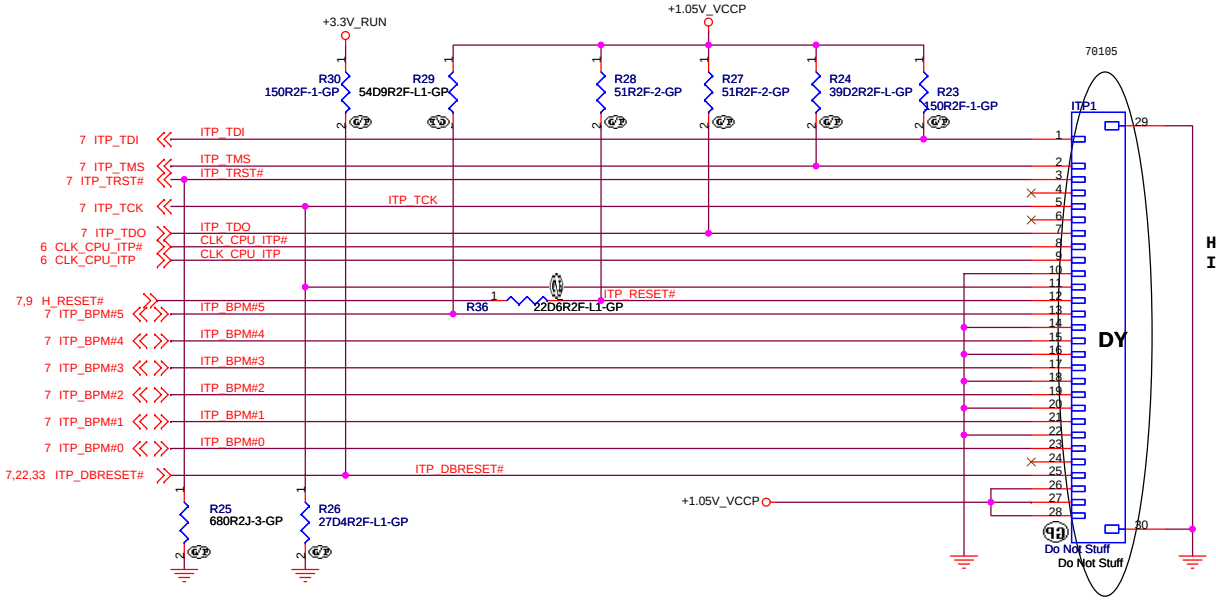

H_CPURST# use pull-up Resistor close ITP connector 500 mil (max)

+1.05VRUN use Decoupling Capacitor close ITP connector 100 mil (max)

ITP Debug Conn.

DB5

Wistron Corporation
21F, 88, Sec.1, Hsin Tai Wu Rd., Hsichih,
Taipei Hsien 221, Taiwan, R.O.C.

Title: ***Beyonce UMA***

Size	Document Number	Rev
A3	***ITP Debug***	*-3*

Date: Wednesday, February 27, 2008 Sheet 5 of 46

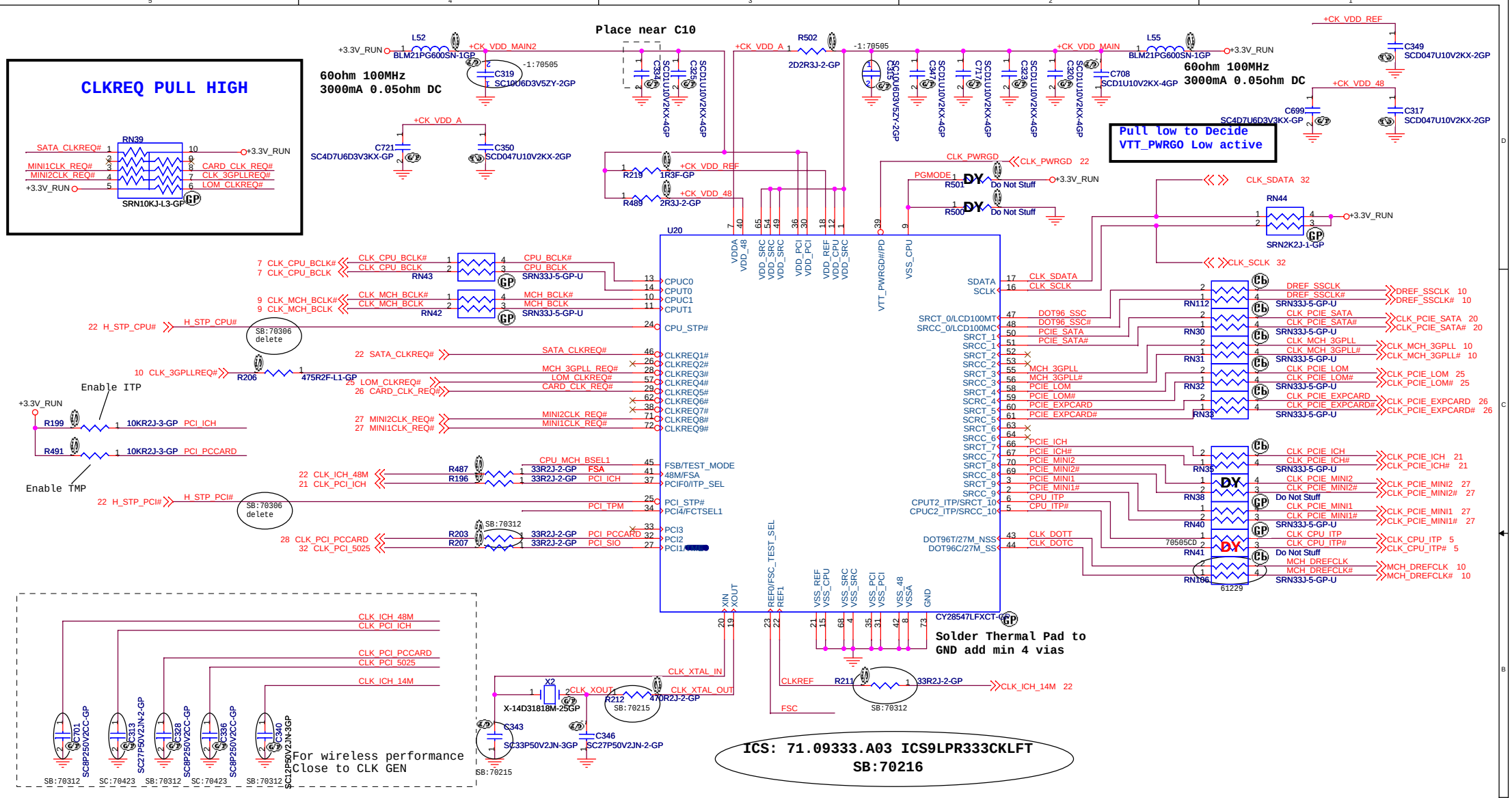

PIN9 PGMODE	PIN39 DISCRIPTION
0	VTT_PWRGD#/PD
1	CKPWRGD/PD#(DEFAULT)

PIN34 FCTSEL1	0 UMA	1 DISC.
PIN43	DOT96T	27M_NonSpread
PIN44	DOT96C	27M_Spread
PIN47	LCD100/96T	SRCT_0
PIN48	LCD100/96C	SRCC_0

SEL2 FSC	SEL1 FSB	SEL0 FSA	CPU	FSB
1	0	1	100M	X
0	0	1	133M	X
0	1	1	166M	667M
0	1	0	200M	800M

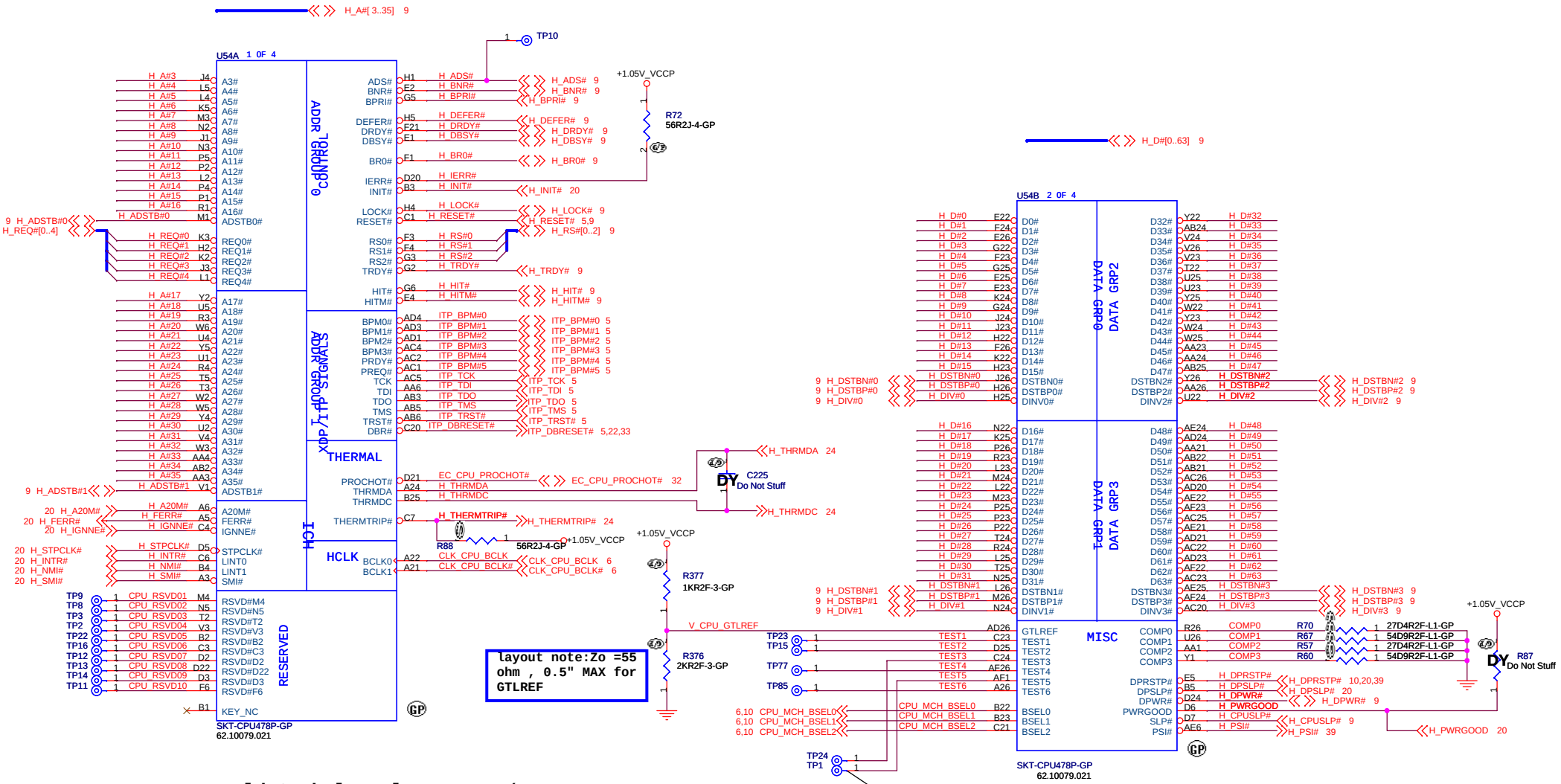

layout note:Zo =55 ohm , 0.5" MAX for GTLREF

Use old Symbol replace New P/N

original value:SKT-CPU478P-GP

TEST3 and TEST5

For the purpose of testability, route thes signals through a ground referenced Zo=55ohm trace that ends in a via that is near a GND via and is accessible through an oscilloscope connection.

DB5

Wistron Corporation
21F, 88, Sec.1, Hsin Tai Wu Rd., Hsichih, Taipei Hsien 221, Taiwan, R.O.C.

Title: **Beyonce UMA**

Size: A3 | Document Number: **CPU-FSB(1/2)** | Rev: -3

Date: Wednesday, February 27, 2008 | Sheet 7 of 46

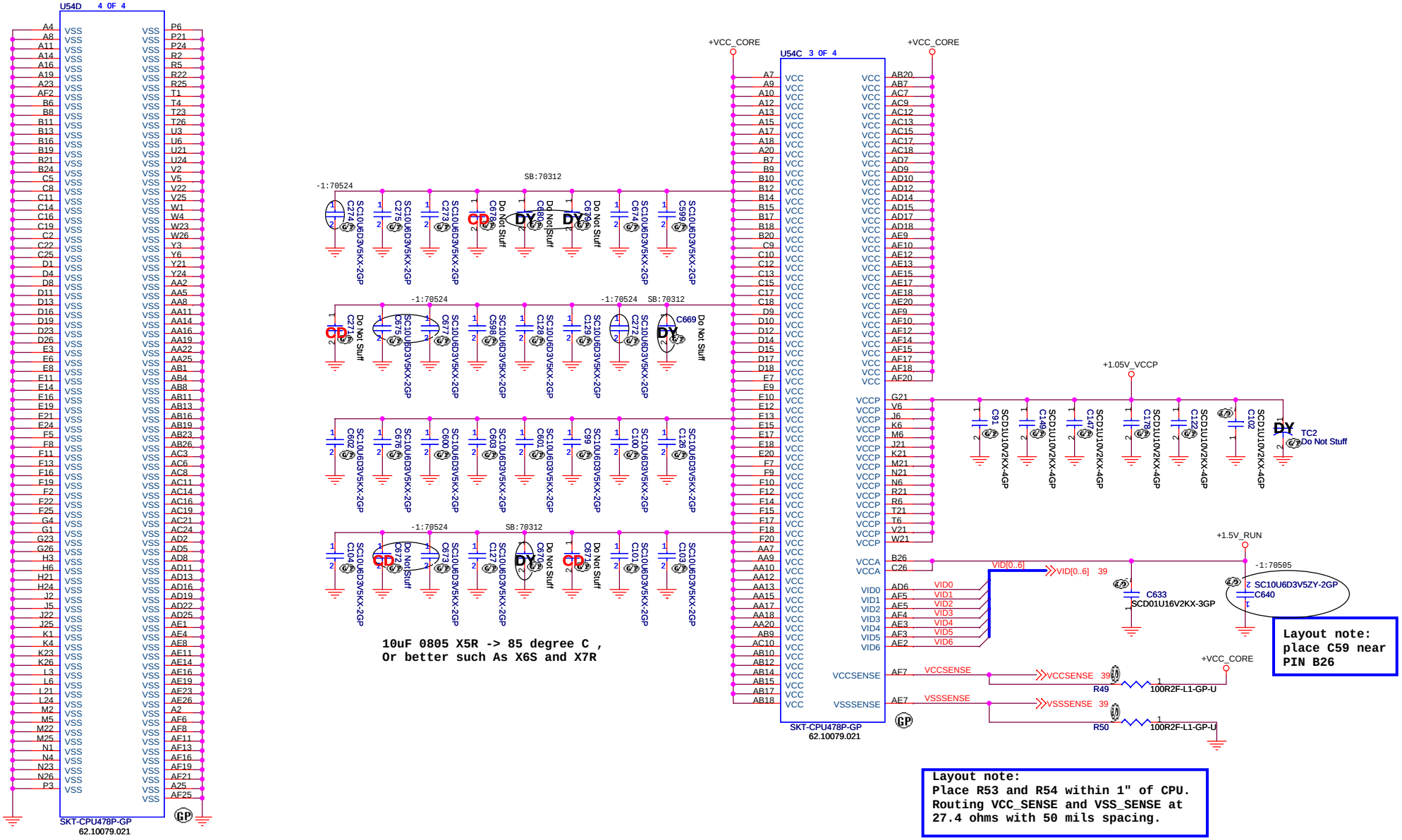

DB5

Wistron Corporation
21F, 88, Sec.1, Hsin Tai Wu Rd., Hsichih,
Taipei Hsien 221, Taiwan, R.O.C.

Title: ***Beyonce UMA***

Size	Document Number	Rev
A3	06.CPU-POWER (2/2)	-3

Date: Wednesday, February 27, 2008 Sheet 8 of 46

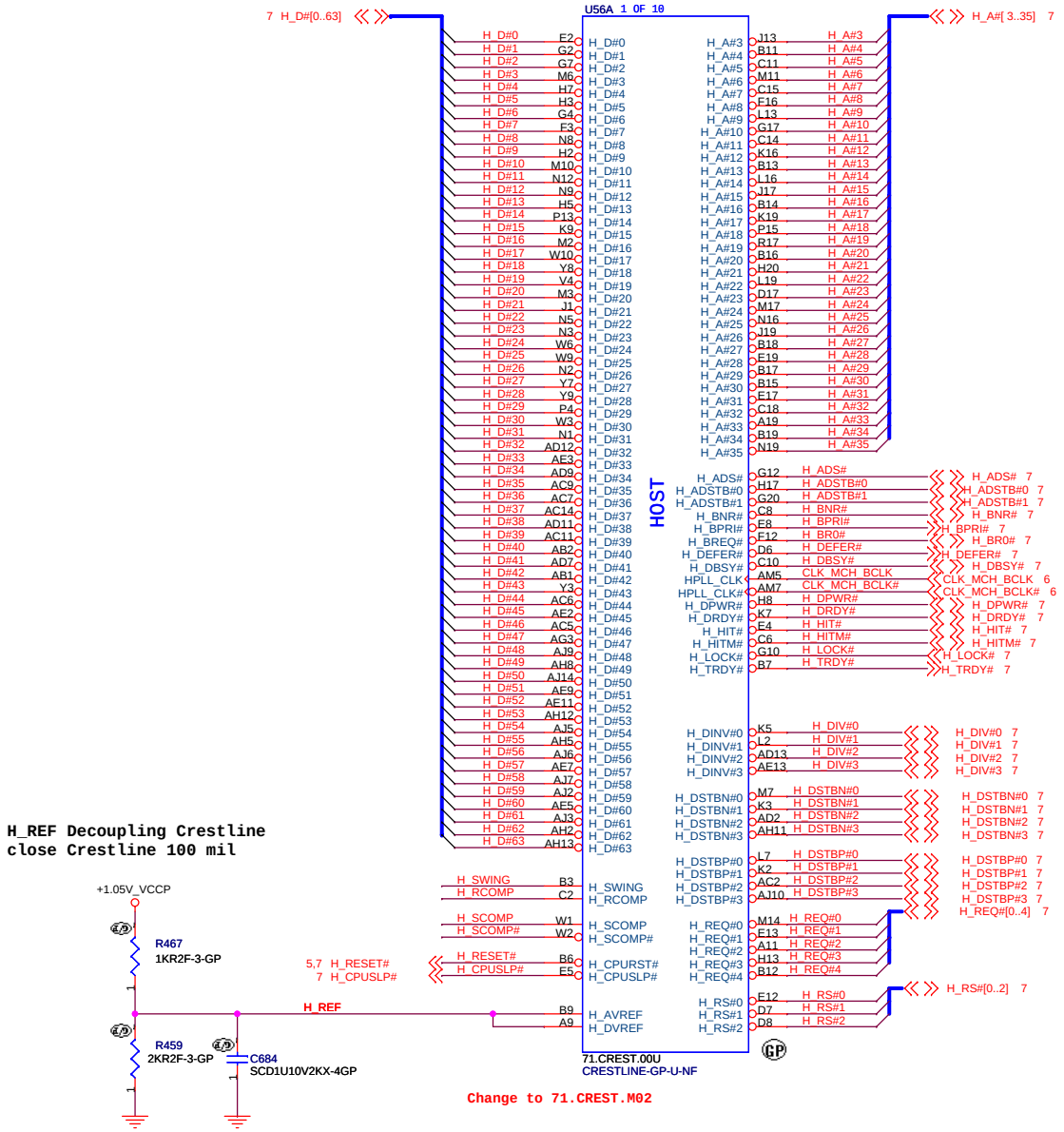

H_REF Decoupling Crestline close Crestline 100 mil

Change to 71.CREST.M02

H_SWING routing Trace width and Spacing use 10 / 20 mil

H_SWING Resistors and Capacitors close Caliistoga 500 mil (MAX)

From Schematic Design Checklit v.1201
221 1% pull high 100
1% pull low

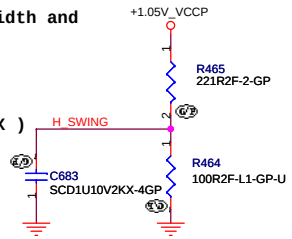

H_SCOMP and H_SCOMP# Resistors and Capacitors close Caliistoga 500 mil (MAX) Zo=55ohms

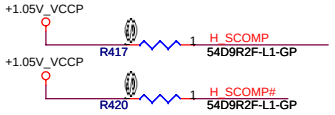

H_RCOMP routing Trace width and Spacing use 10 / 20 mil

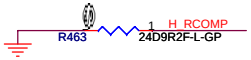

DB5

Wistron Corporation
21F, 88, Sec.1, Hsin Tai Wu Rd., Hsichih,
Taipei Hsien 221, Taiwan, R.O.C.

Title: **Beyonce UMA**

Size: A3 | Document Number: **GMCH-FSB LIBC (1/6)** | Rev: -3

Date: Wednesday, February 27, 2008 | Sheet 9 of 46

* is Default setting

CFG Strap	Low	High
CFG 5	DMI X 2	DMI X 4 *
CFG 6	Moby Dick	Calistoga *
CFG 7	DT/Transportable CPU	Mobile CPU *
CFG 9	Reserved Lane	Normal Operation *
CFG 10	Reserved	Mobility *
CFG 11	Calistoga *	Reserved
CFG 16 FSB Dynamic ODT	Disabled	Enabled *
CFG 18 VCC Select	1.05V *	1.5V
CFG 19 DMI Lane Reserved	Normal Operation *	Reserved Lane
CFG 20 PCIE/SDVO Select	Only PCIE or SDVO is operation *	PCIE and SDVO are operation simu
SDVO_CTRLDATA	No SDVO Device present *	SDVO Device present

	CFG[13:12]
LL	Reserved
LH	XOR Mode Enabled
HL	All Z Mode Enabled
HH	Normal Operation *
	CFG[2..0] FSB Select
LHL	FSB 800
LHH	FSB 667
Other	Reserved

Layout Note:
Location of all MCH_CFG strap resistors needs to be close to minimize stub.

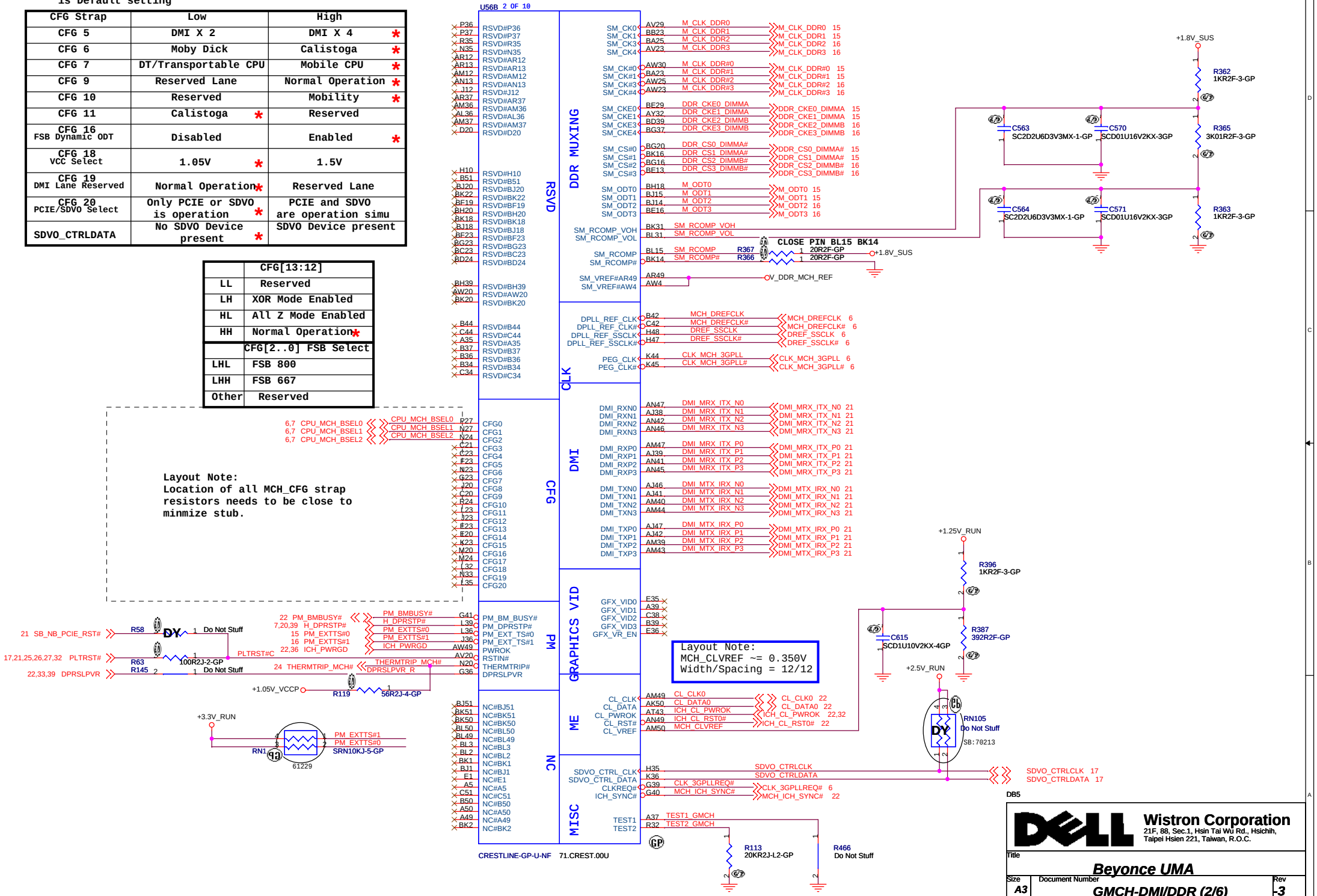

Wistron Corporation
21F, 88, Sec.1, Hsin Tai Wu Rd., Hsichih, Taipei Hsien 221, Taiwan, R.O.C.

Title: Beyonce UMA

Size: A3 | Document Number: GMCH-DMI/DDR (2/6) | Rev: -3

Date: Wednesday, February 27, 2008 | Sheet 10 of 46

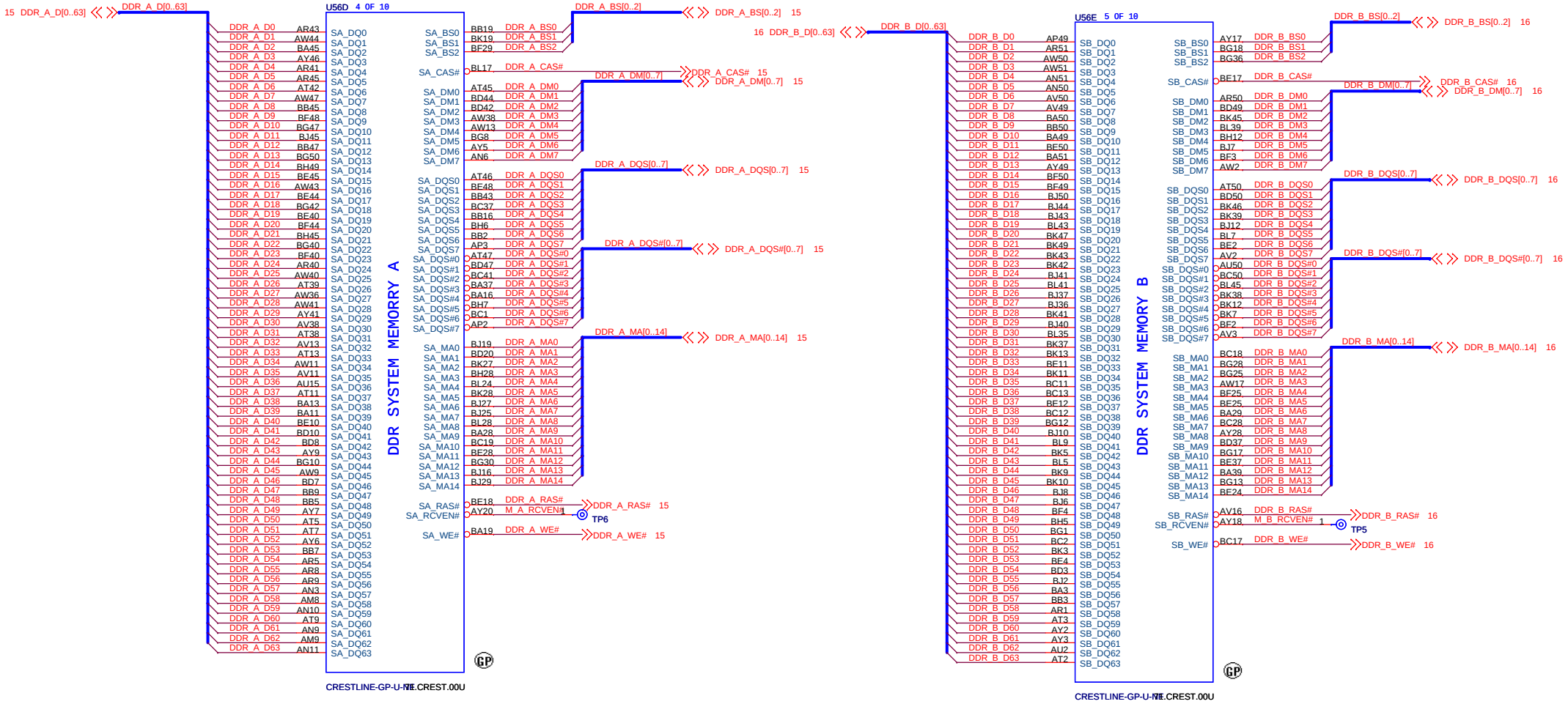

DB5

Wistron Corporation
21F, 88, Sec.1, Hsin Tai Wu Rd., Hsichih,
Taipei Hsien 221, Taiwan, R.O.C.

Title: ***Beyonce UMA***

Size	Document Number	Rev
A3	GMCH-DDR (3/6)	-3

Date: Wednesday, February 27, 2008 Sheet 11 of 46

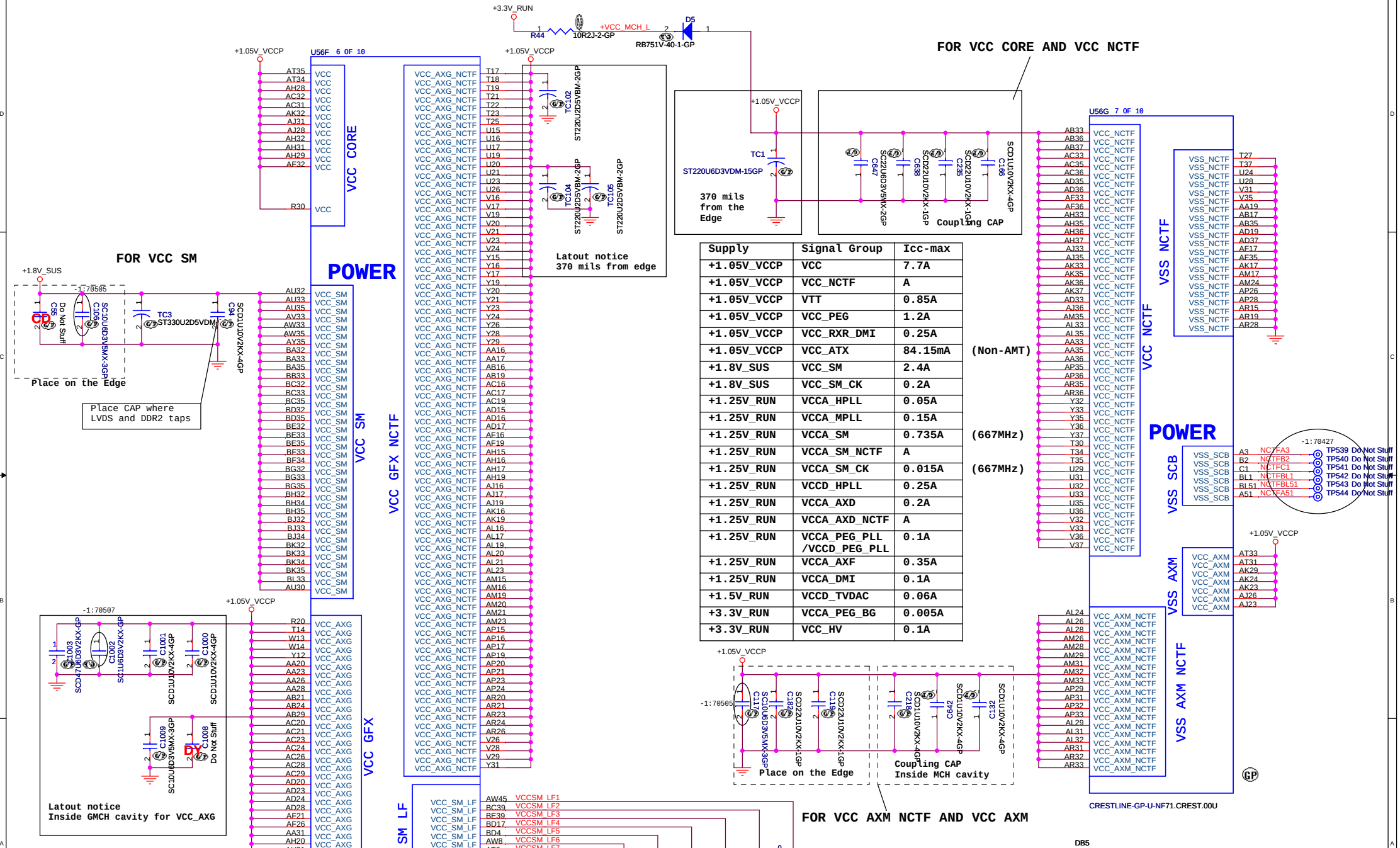

Supply	Signal Group	Icc-max	
+1.05V_VCCP	VCC	7.7A	
+1.05V_VCCP	VCC_NCTF	A	
+1.05V_VCCP	VTT	0.85A	
+1.05V_VCCP	VCC_PEG	1.2A	
+1.05V_VCCP	VCC_RXR_DMI	0.25A	
+1.05V_VCCP	VCC_ATX	84.15mA	(Non-AMT)
+1.8V_SUS	VCC_SM	2.4A	
+1.8V_SUS	VCC_SM_CK	0.2A	
+1.25V_RUN	VCCA_HPLL	0.05A	
+1.25V_RUN	VCCA_MPLL	0.15A	
+1.25V_RUN	VCCA_SM	0.735A	(667MHz)
+1.25V_RUN	VCCA_SM_NCTF	A	
+1.25V_RUN	VCCA_SM_CK	0.015A	(667MHz)
+1.25V_RUN	VCCD_HPLL	0.25A	
+1.25V_RUN	VCCA_AXD	0.2A	
+1.25V_RUN	VCCA_AXD_NCTF	A	
+1.25V_RUN	VCCA_PEG_PLL /VCCD_PEG_PLL	0.1A	
+1.25V_RUN	VCCA_AXF	0.35A	
+1.25V_RUN	VCCA_DMI	0.1A	
+1.5V_RUN	VCCD_TVDAC	0.06A	
+3.3V_RUN	VCCA_PEG_BG	0.005A	
+3.3V_RUN	VCC_HV	0.1A	

DB5

Wistron Corporation
21F, 88, Sec.1, Hsin Tai Wu Rd., Hsichih, Taipei Hsien 221, Taiwan, R.O.C.

Title: **Beyonce UMA**

Size: A3 | Document Number: **GMCH-POWER (4/6)** | Rev: -3

Date: Wednesday, February 27, 2008 | Sheet 12 of 46

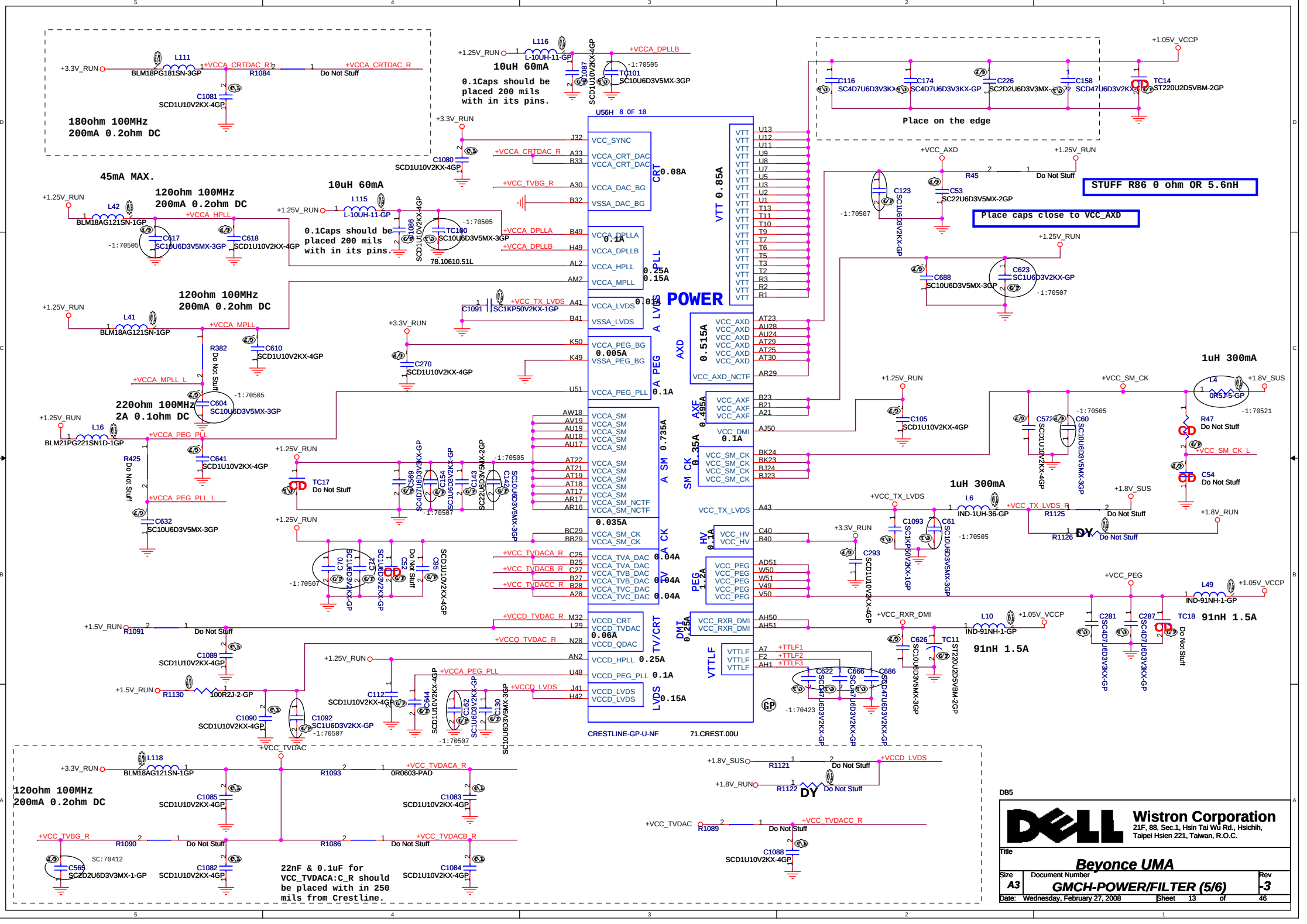
POWER
U56H 8 OF 10
CRESTLINE-GP-U-NF
71.CREST.00U
180ohm 100MHz
200mA 0.2ohm DC
10uH 60mA
0.1Caps should be placed 200 mils with in its pins.
45mA MAX.
120ohm 100MHz
200mA 0.2ohm DC
220ohm 100MHz
2A 0.1ohm DC
Place on the edge
STUFF R86 0 ohm OR 5.6nH
Place caps close to VCC_AXD
1uH 300mA
91nH 1.5A
22nF & 0.1uF for VCC_TVDACA:C_R should be placed with in 250 mils from Crestline.
Wistron Corporation
21F, 88, Sec.1, Hsin Tai Wu Rd., Hsichih, Taipei Hsien 221, Taiwan, R.O.C.
Title
Beyonce UMA
Size A3
Document Number GMCH-POWER/FILTER (5/6)
Rev -3
Date: Wednesday, February 27, 2008
Sheet 13 of 46

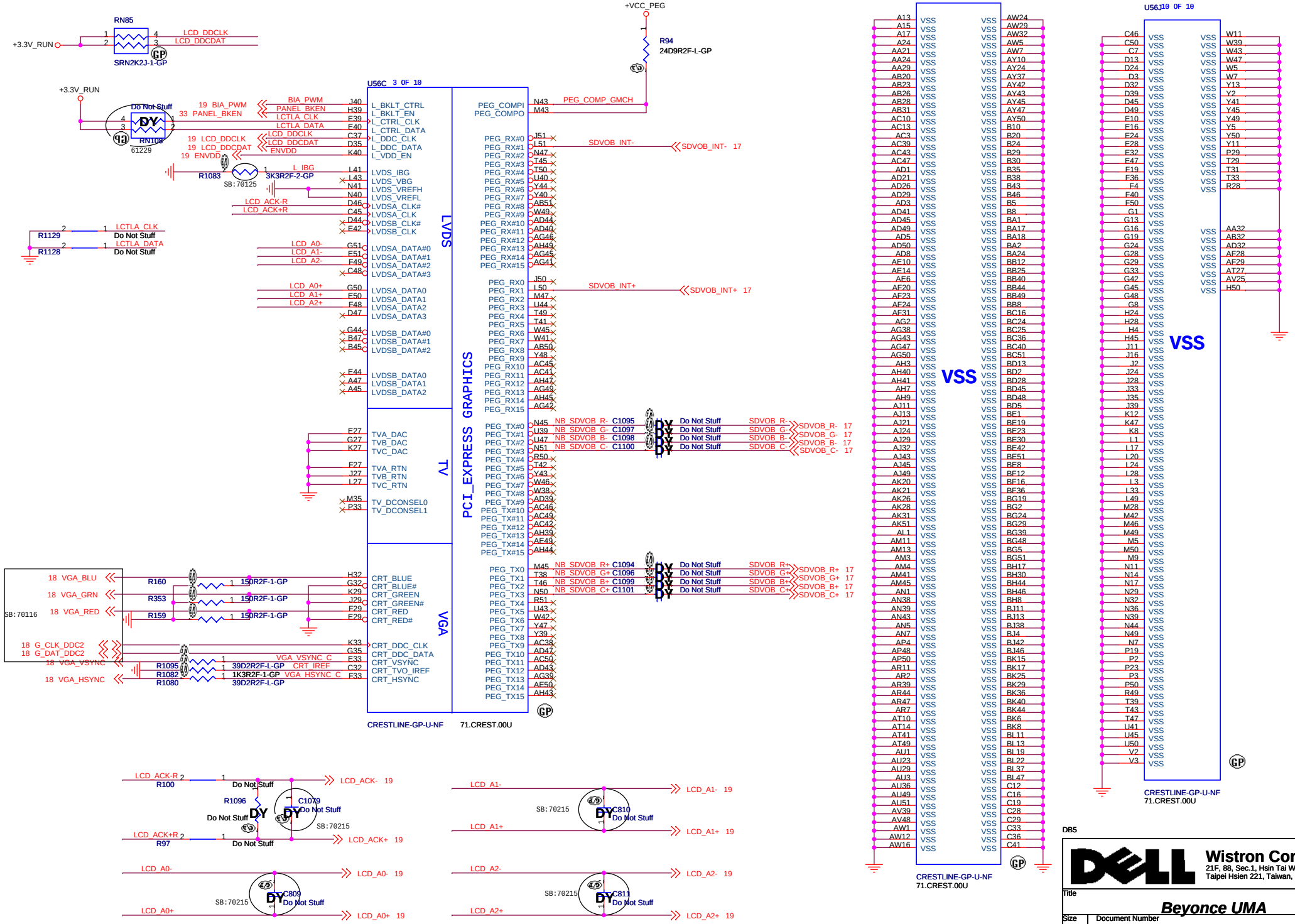
RN85
SRN2K2J-1-GP
+3.3V_RUN
LCD_DDCLK
LCD_DDCDAT
U56C 3 OF 10
LVDS
PCI_EXPRESS GRAPHICS
TV
VGA
CRESTLINE-GP-U-NF
71.CREST.00U
+VCC_PEG
R94
24D9R2F-L-GP
PEG_COMP_GMCH
SDVOB_INT-
SDVOB_INT+
SDVOB_INT- 17
SDVOB_INT+ 17
BIA_PWM
PANEL_BKEN
LCTLA_CLK
LCTLA_DATA
LCD_DDCLK
LCD_DDCDAT
ENVDD
L_IBG
R1083
3K3R2F-2-GP
SB:70125
LCD_ACK-R
LCD_ACK+R
R1129
R1128
Do Not Stuff
LCD_A0-
LCD_A1-
LCD_A2-
LCD_A0+
LCD_A1+
LCD_A2+
NB_SDVOB_R- C1095
NB_SDVOB_G- C1097
NB_SDVOB_B- C1098
NB_SDVOB_C- C1100
SDVOB_R-
SDVOB_G-
SDVOB_B-
SDVOB_C-
SDVOB_R- 17
SDVOB_G- 17
SDVOB_B- 17
SDVOB_C- 17
NB_SDVOB_R+ C1094
NB_SDVOB_G+ C1096
NB_SDVOB_B+ C1099
NB_SDVOB_C+ C1101
SDVOB_R+
SDVOB_G+
SDVOB_B+
SDVOB_C+
SDVOB_R+ 17
SDVOB_G+ 17
SDVOB_B+ 17
SDVOB_C+ 17
18 VGA_BLU
18 VGA_GRN
18 VGA_RED
R160
R353
R159
150R2F-1-GP
SB:70116
18 G_CLK_DDC2
18 G_DAT_DDC2
18 VGA_VSYNC
18 VGA_HSYNC
R1095
R1082
R1080
39D2R2F-L-GP
1K3R2F-1-GP
VGA_VSYNC_C
CRT_IREF
VGA_HSYNC_C
LCD_ACK-R
R100
LCD_ACK- 19
R1096
C1079
SB:70215
LCD_ACK+R
R97
LCD_ACK+ 19
LCD_A0- 19
LCD_A0+ 19
C809
LCD_A1- 19
LCD_A1+ 19
C810
LCD_A2- 19
LCD_A2+ 19
C811
U56I 9 OF 10
VSS
U56J 10 OF 10
CRESTLINE-GP-U-NF
71.CREST.00U
DB5
Wistron Corporation
21F, 88, Sec.1, Hsin Tai Wu Rd., Hsichih,
Taipei Hsien 221, Taiwan, R.O.C.
Title
Beyonce UMA
Size
A3
Document Number
GMCH-GND/LVDA/VGA (6/6)
Rev
-3
Date: Wednesday, February 27, 2008
Sheet 14 of 46

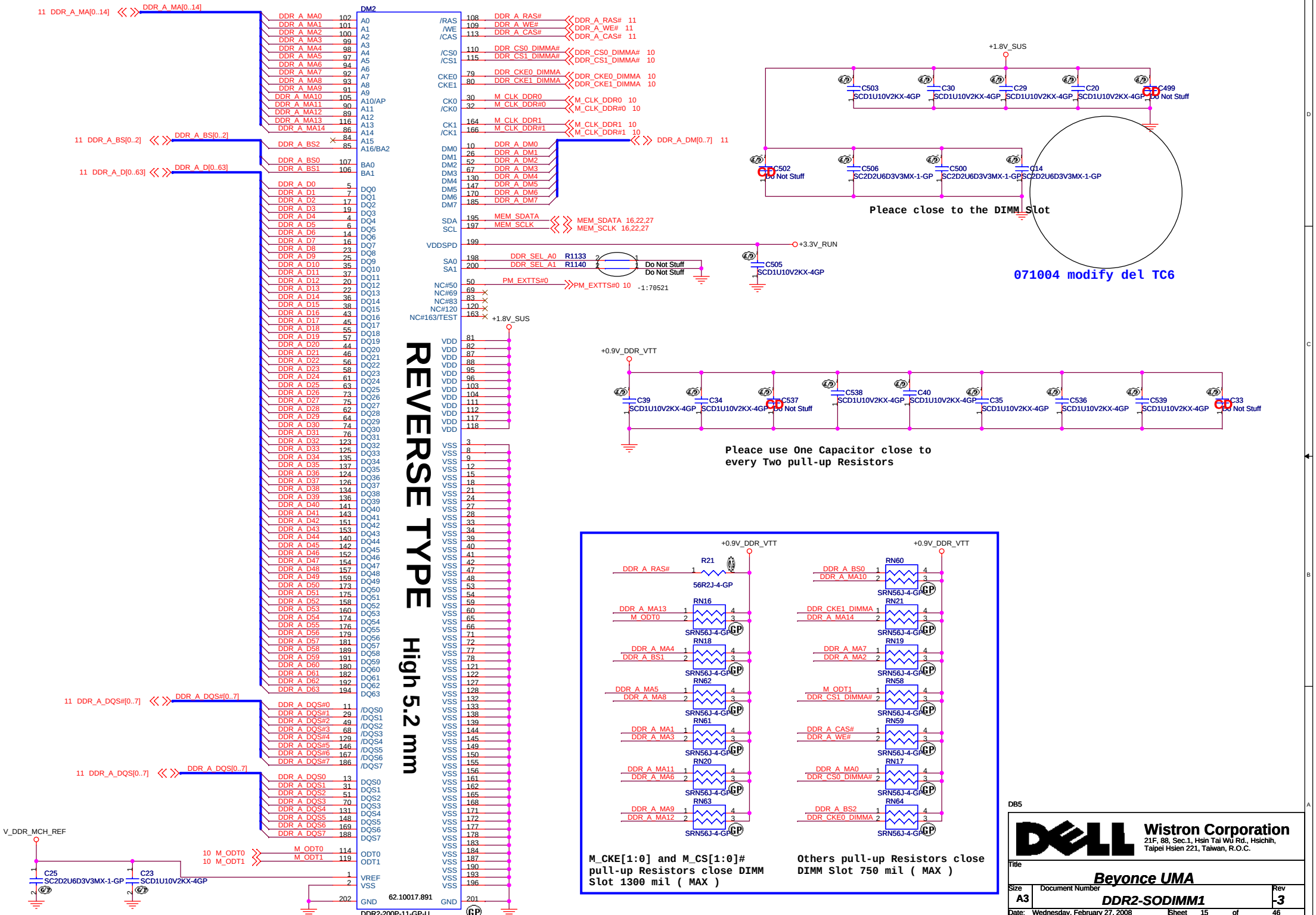
DM2
REVERSE TYPE
High 5.2 mm
DDR2-200P-11-GP-U
62.10017.891
11 DDR_A_MA[0..14]
DDR_A_MA[0..14]
11 DDR_A_BS[0..2]
DDR_A_BS[0..2]
11 DDR_A_D[0..63]
DDR_A_D[0..63]
11 DDR_A_DQS#[0..7]
DDR_A_DQS#[0..7]
11 DDR_A_DQS[0..7]
DDR_A_DQS[0..7]
DDR_A_DM[0..7] 11
DDR_A_RAS# 11
DDR_A_WE# 11
DDR_A_CAS# 11
DDR_CS0_DIMMA# 10
DDR_CS1_DIMMA# 10
DDR_CKE0_DIMMA 10
DDR_CKE1_DIMMA 10
M_CLK_DDR0 10
M_CLK_DDR#0 10
M_CLK_DDR1 10
M_CLK_DDR#1 10
MEM_SDATA 16,22,27
MEM_SCLK 16,22,27
+3.3V_RUN
DDR_SEL_A0 R1133
DDR_SEL_A1 R1140
Do Not Stuff
Do Not Stuff
C505
SCD1U10V2KX-4GP
PM_EXTTS#0 10
-1:70521
+1.8V_SUS
+0.9V_DDR_VTT
V_DDR_MCH_REF
10 M_ODT0
10 M_ODT1
C25
SC2D2U6D3V3MX-1-GP
C23
SCD1U10V2KX-4GP
C503
SCD1U10V2KX-4GP
C30
SCD1U10V2KX-4GP
C29
SCD1U10V2KX-4GP
C20
SCD1U10V2KX-4GP
C499
Do Not Stuff
C502
Do Not Stuff
C506
SC2D2U6D3V3MX-1-GP
C500
SC2D2U6D3V3MX-1-GP
C14
SC2D2U6D3V3MX-1-GP
Pleace close to the DIMM Slot
071004 modify del TC6
C39
SCD1U10V2KX-4GP
C34
SCD1U10V2KX-4GP
C537
Do Not Stuff
C538
SCD1U10V2KX-4GP
C40
SCD1U10V2KX-4GP
C35
SCD1U10V2KX-4GP
C536
SCD1U10V2KX-4GP
C539
SCD1U10V2KX-4GP
C33
Do Not Stuff
Pleace use One Capacitor close to
every Two pull-up Resistors
R21
56R2J-4-GP
RN16
RN18
RN62
RN61
RN20
RN63
RN60
RN21
RN19
RN58
RN59
RN17
RN64
SRN56J-4-GP
M_CKE[1:0] and M_CS[1:0]#
pull-up Resistors close DIMM
Slot 1300 mil (MAX)
Others pull-up Resistors close
DIMM Slot 750 mil (MAX)
DB5
Wistron Corporation
21F, 88, Sec.1, Hsin Tai Wu Rd., Hsichih,
Taipei Hsien 221, Taiwan, R.O.C.
Title
Beyonce UMA
Size
A3
Document Number
DDR2-SODIMM1
Rev
-3
Date: Wednesday, February 27, 2008
Sheet 15 of 46

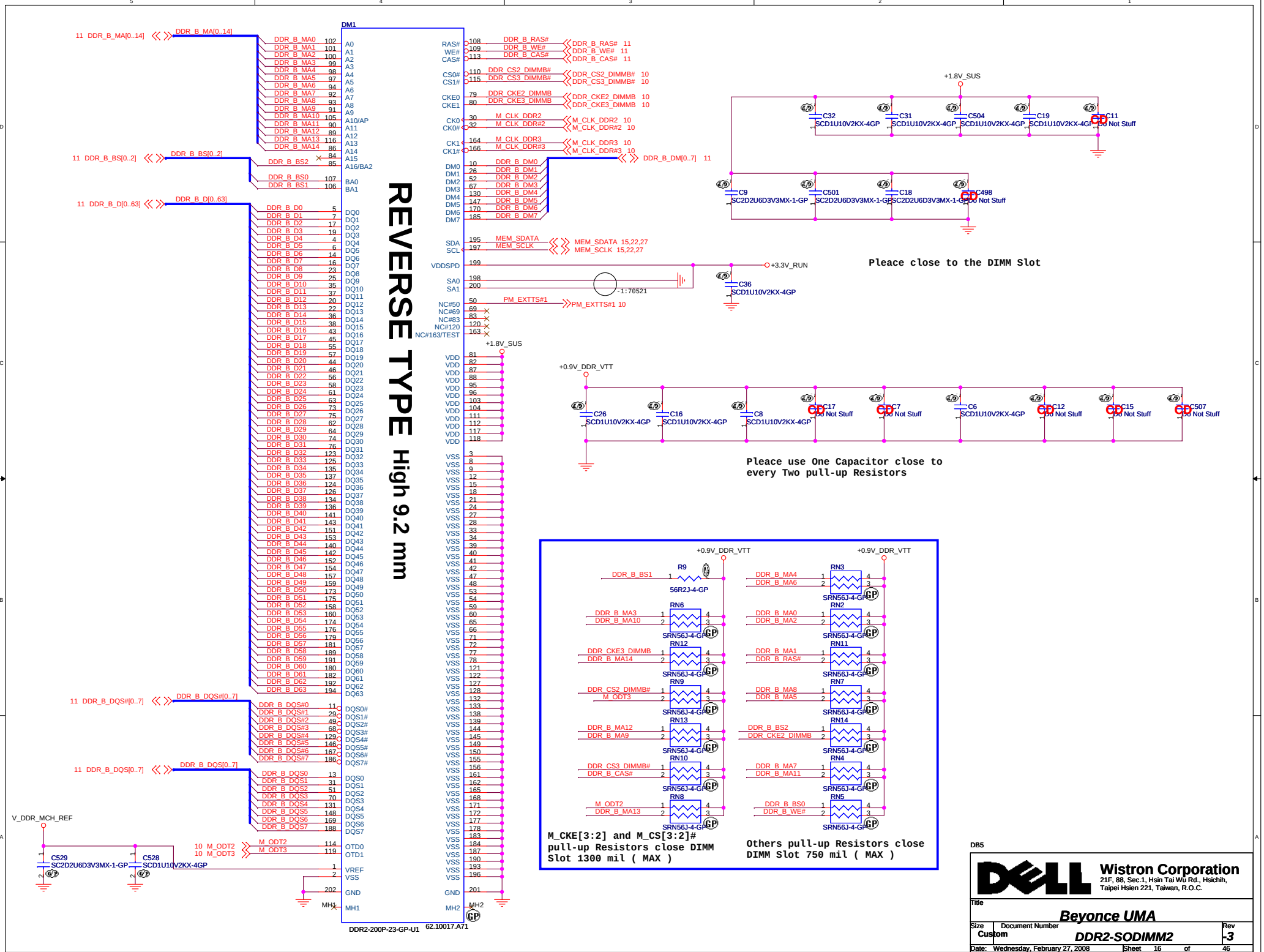
REVERSE TYPE High 9.2 mm
DM1
DDR2-200P-23-GP-U1
62.10017.A71
11 DDR_B_MA[0..14]
DDR_B_MA[0..14]
11 DDR_B_BS[0..2]
DDR_B_BS[0..2]
11 DDR_B_D[0..63]
DDR_B_D[0..63]
11 DDR_B_DQS#[0..7]
DDR_B_DQS#[0..7]
11 DDR_B_DQS[0..7]
DDR_B_DQS[0..7]
DDR_B_DM[0..7] 11
DDR_B_RAS# 11
DDR_B_WE# 11
DDR_B_CAS# 11
DDR_CS2_DIMMB# 10
DDR_CS3_DIMMB# 10
DDR_CKE2_DIMMB 10
DDR_CKE3_DIMMB 10
M_CLK_DDR2 10
M_CLK_DDR#2 10
M_CLK_DDR3 10
M_CLK_DDR#3 10
MEM_SDATA 15,22,27
MEM_SCLK 15,22,27
PM_EXTTS#1 10
10 M_ODT2
10 M_ODT3
V_DDR_MCH_REF
C529 SC2D2U6D3V3MX-1-GP
C528 SCD1U10V2KX-4GP
+1.8V_SUS
+3.3V_RUN
+0.9V_DDR_VTT
C32 SCD1U10V2KX-4GP
C31 SCD1U10V2KX-4GP
C504 SCD1U10V2KX-4GP
C19 SCD1U10V2KX-4GP
C11 Do Not Stuff
C9 SC2D2U6D3V3MX-1-GP
C501 SC2D2U6D3V3MX-1-GP
C18 SC2D2U6D3V3MX-1-GP
C498 Do Not Stuff
C36 SCD1U10V2KX-4GP
Pleace close to the DIMM Slot
C26 SCD1U10V2KX-4GP
C16 SCD1U10V2KX-4GP
C8 SCD1U10V2KX-4GP
C17 Do Not Stuff
C7 Do Not Stuff
C6 SCD1U10V2KX-4GP
C12 Do Not Stuff
C15 Do Not Stuff
C507 Do Not Stuff
Pleace use One Capacitor close to every Two pull-up Resistors
R9 56R2J-4-GP
RN3 RN6 RN2 RN12 RN11 RN9 RN7 RN13 RN14 RN10 RN4 RN8 RN5
SRN56J-4-GP
M_CKE[3:2] and M_CS[3:2]# pull-up Resistors close DIMM Slot 1300 mil (MAX)
Others pull-up Resistors close DIMM Slot 750 mil (MAX)
DB5
Wistron Corporation
21F, 88, Sec.1, Hsin Tai Wu Rd., Hsichih, Taipei Hsien 221, Taiwan, R.O.C.
Title
Beyonce UMA
Size Custom
Document Number DDR2-SODIMM2
Rev -3
Date: Wednesday, February 27, 2008
Sheet 16 of 46

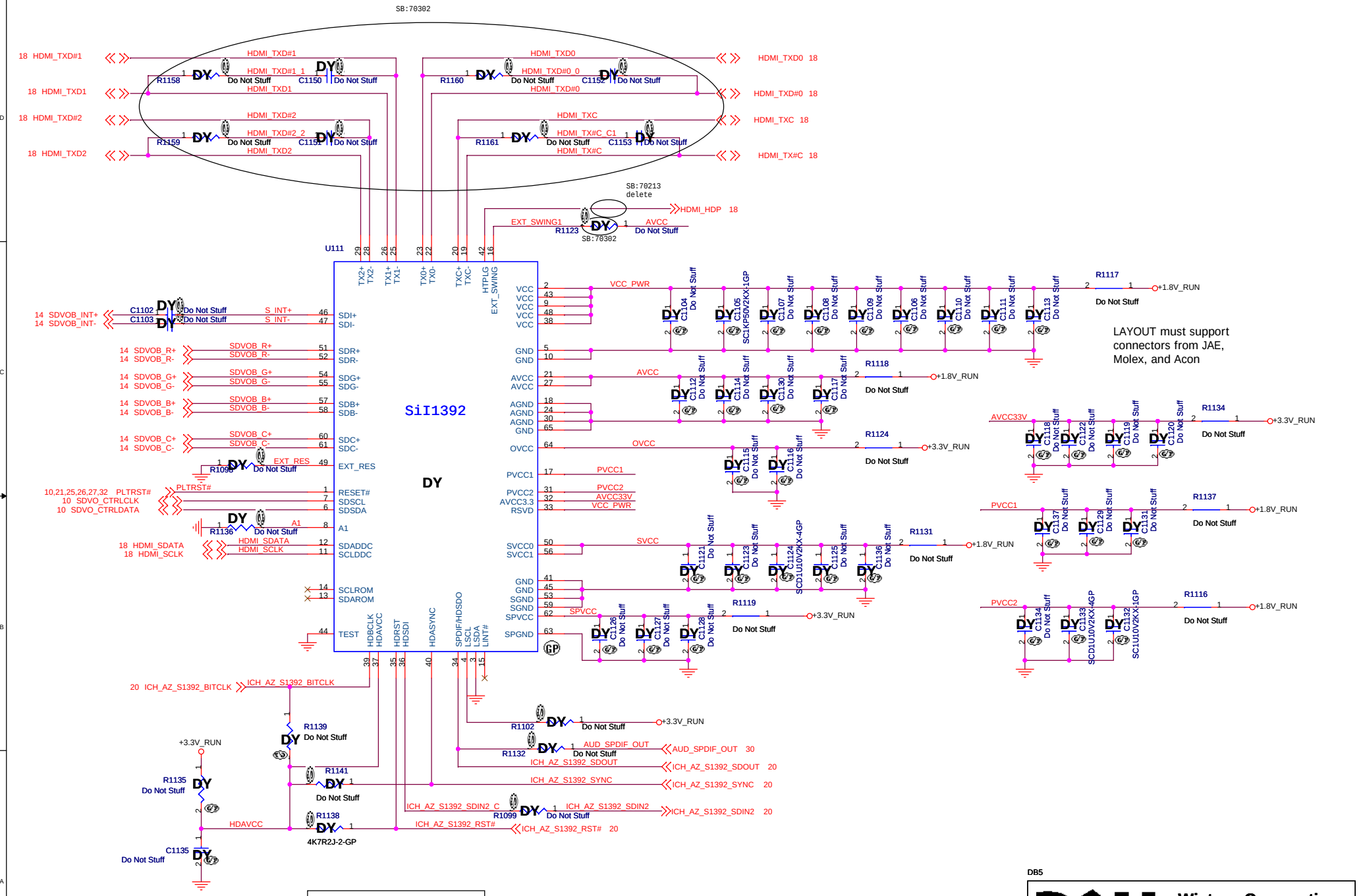

DB5

Wistron Corporation
21F, 88, Sec.1, Hsin Tai Wu Rd., Hsichih,
Taipei Hsien 221, Taiwan, R.O.C.

Title: ***Beyonce UMA***

Size	Document Number	Rev
A3	Sil 1932	-1

Date: Wednesday, February 27, 2008 Sheet 17 of 46

CRT conn.

Setting R,G,B trace impedance to 50 ohm.

+3.3V_RUN
RN109 SRN2K2J-1-GP
U115 2N7002DW-7F-GP
14 G_DAT_DDC2
14 G_CLK_DDC2
+5V_RUN -1:70517
D24 B140-13-F-GP
+CRT_VCC
RN57 SRN2K2J-1-GP
C512 SCD01U16V2KX-3GP
CRT1 VIDEO-15-84-GP-U 20.20735.015 -2:70622
DAT_DDC2 CLK_DDC2 VCC_CRT DDCDATA_ID1 DDCCLK_ID3 CRT_R CRT_G CRT_B JVGA_HS JVGA_VS GND NP1 NP2 NC#11 NC#4
14 VGA_RED 14 VGA_GRN 14 VGA_BLU
VGA_RED VGA_GRN VGA_BLU
L2 L1 L33 BLM18PG300SN-GP 68.00143.071
30ohm 100MHz 1000mA 0.05ohm DC -1:70508
R18 150R2F-1-GP R16 150R2F-1-GP R328 150R2F-1-GP
C28 Do Not Stuff C22 Do Not Stuff C530 Do Not Stuff C514 Do Not Stuff C515 Do Not Stuff
SB:70206
+5V_RUN D4 D2 D23 CRT_R CRT_G CRT_B DY Do Not Stuff
Item18
+5VRUN_CRT
D30 RB751V-40-1-GP
C681 SCD01U16V2KX-3GP
R436 1KR2J-1-GP
U60A SSAHCT125PWR-GP
14 VGA_HSYNC VGA_HSYNC_R
R433 10R2J-2-GP
120ohm 100MHz 200mA 0.2ohm DC
HSYNC
L34 Do Not Stuff
R337 Do Not Stuff R338 Do Not Stuff
U60B SSAHCT125PWR-GP
14 VGA_VSYNC VGA_VSYNC_R
R432 10R2J-2-GP
VSYNC
L35 Do Not Stuff
C518 Do Not Stuff C517 Do Not Stuff
120ohm 100MHz 200mA 0.2ohm DC

17 HDMI_TXD#1 HDMI_TXD#1 R409 Do Not Stuff HDMI_TXD#1_C L46 Do Not Stuff DY HDMI_TXD1 R418 Do Not Stuff HDMI_TXD1_C
17 HDMI_TXD#0 HDMI_TXD#0 R403 Do Not Stuff HDMI_TXD#0_C L44 Do Not Stuff DY HDMI_TXD0 R405 Do Not Stuff HDMI_TXD0_C
17 HDMI_TXD#2 HDMI_TXD#2 R424 Do Not Stuff HDMI_TXD#2_C L47 Do Not Stuff DY HDMI_TXD2 R427 Do Not Stuff HDMI_TXD2_C
17 HDMI_TX#C HDMI_TX#C R395 Do Not Stuff HDMI_TX#C_C L43 Do Not Stuff DY HDMI_TXC R397 Do Not Stuff HDMI_TXC_C

HDMI CONN

HDMI1 DY Do Not Stuff
HDMI_TXD#0_C HDMI_TXD0_C HDMI_TXD#1_C HDMI_TXD1_C HDMI_TXD#2_C HDMI_TXD2_C HDMI_TX#C_C HDMI_TXC_C
TMDS_DATA0- TMDS_DATA0+ TMDS_DATA1- TMDS_DATA1+ TMDS_DATA2- TMDS_DATA2+ TMDS_CLOCK- TMDS_CLOCK+ TMDS_DATA0_SHIELD TMDS_DATA1_SHIELD TMDS_DATA2_SHIELD TMDS_CLOCK_SHIELD
+5V_POWER SDA SCL CEC RESERVED#14 HOT_PLUG_DETECT DDC/CEC_GROUNG GND
+5V_RUN D9 D8 DY Do Not Stuff +5V_HDMI +5V_HDMI_C RN24 Do Not Stuff SB:70226
+3.3V_RUN R75 Do Not Stuff RN25 Do Not Stuff U14 1OE# 2OE# 1A 2A VCC 1B GND 2B Do Not Stuff
HDMI_SDATA_C R104 Do Not Stuff HDMI_SDATA HDMI_SDATA 17
HDMI_SCLK_C R103 Do Not Stuff HDMI_SCLK HDMI_SCLK 17
HDMI_CEC TP83 Do Not Stuff
HDMI_CNC TP81 Do Not Stuff
HDMI_DP_C2 R109 Do Not Stuff HDMI_HDP HDMI_HDP 17
R106 Do Not Stuff SC:70412

DB5

Wistron Corporation
21F, 88, Sec.1, Hsin Tai Wu Rd., Hsichih, Taipei Hsien 221, Taiwan, R.O.C.

Title: Beyonce UMA
Size: A3 | Document Number: CRT/HDMI | Rev: -3
Date: Wednesday, February 27, 2008 | Sheet 18 of 46

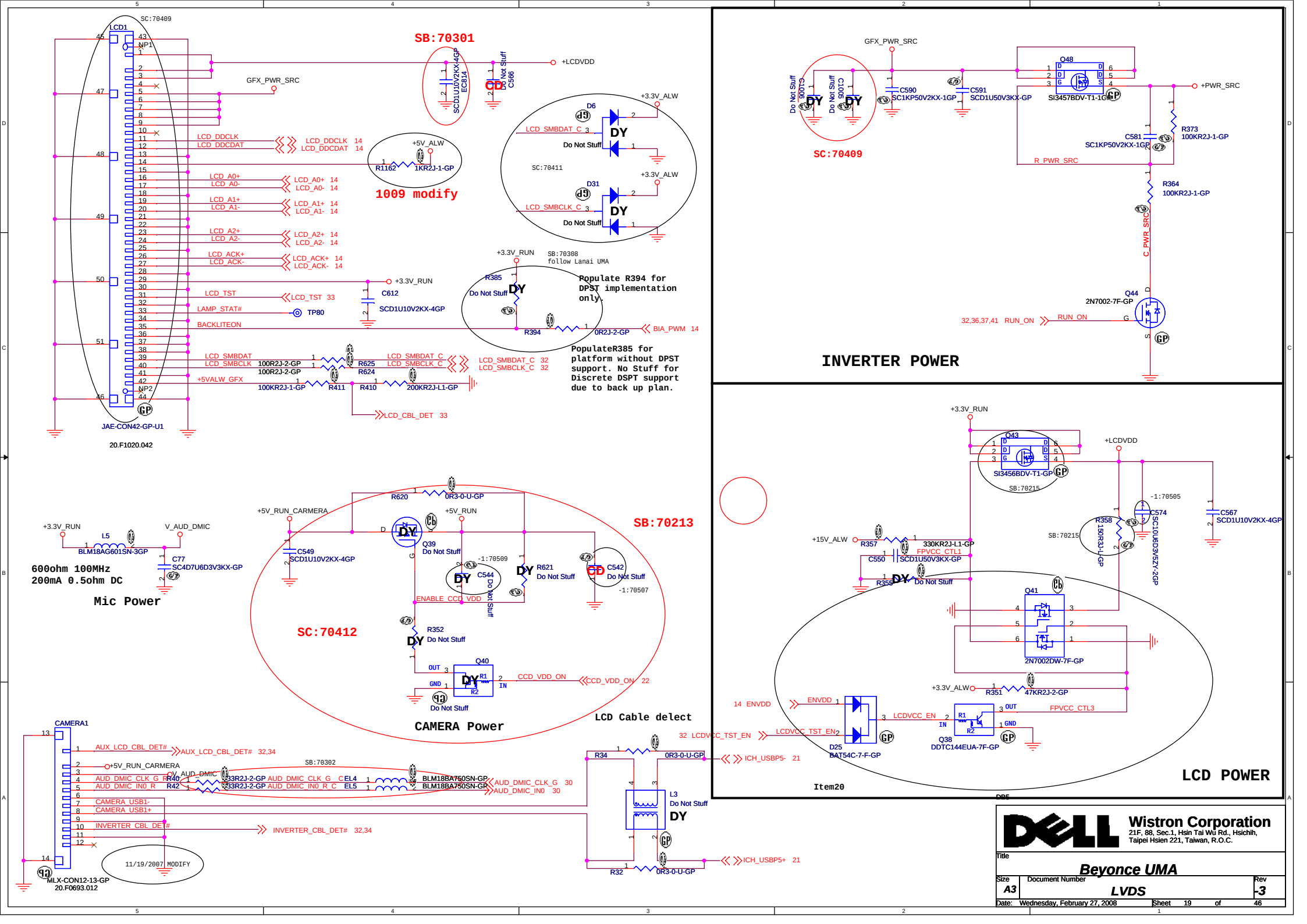
SB:70301
SC:70409
LCD1
JAE-CON42-GP-U1
20.F1020.042
+LCDVDD
GFX_PWR_SRC
LCD_DDCLK
LCD_DDCDAT
LCD_A0+
LCD_A0-
LCD_A1+
LCD_A1-
LCD_A2+
LCD_A2-
LCD_ACK+
LCD_ACK-
LCD_TST
LAMP_STAT#
BACKLITEON
LCD_SMBDAT
LCD_SMBCLK
+5VALW_GFX
+3.3V_RUN
+5V_ALW
1009 modify
SC:70411
+3.3V_ALW
Do Not Stuff
SB:70308
follow Lanai UMA
Populate R394 for DPST implementation only.
PopulateR385 for platform without DPST support. No Stuff for Discrete DSPT support due to back up plan.
BIA_PWM
LCD_CBL_DET
SC:70409
INVERTER POWER
GFX_PWR_SRC
+PWR_SRC
R_PWR_SRC
C_PWR_SRC
RUN_ON
32,36,37,41 RUN_ON
Mic Power
600ohm 100MHz
200mA 0.5ohm DC
+3.3V_RUN
V_AUD_DMIC
+5V_RUN_CARMERA
+5V_RUN
SB:70213
SC:70412
CAMERA Power
ENABLE_CCD_VDD
CCD_VDD_ON
LCD Cable delect
CAMERA1
MLX-CON12-13-GP
20.F0693.012
AUX_LCD_CBL_DET#
AUD_DMIC_CLK_G
AUD_DMIC_IN0_R
CAMERA_USB1-
CAMERA_USB1+
INVERTER_CBL_DET#
11/19/2007 MODIFY
ICH_USBP5-
ICH_USBP5+
LCD POWER
+LCDVDD
+15V_ALV
FPVCC_CTL1
FPVCC_CTL3
ENVDD
LCDVCC_EN
LCDVCC_TST_EN
Item20
Wistron Corporation
21F, 88, Sec.1, Hsin Tai Wu Rd., Hsichih,
Taipei Hsien 221, Taiwan, R.O.C.
Title
Beyonce UMA
Size A3
Document Number
LVDS
Rev -3
Date: Wednesday, February 27, 2008
Sheet 19 of 46

We would like to change X5 to 82.10026.021 and X3 to 82.30001.691.

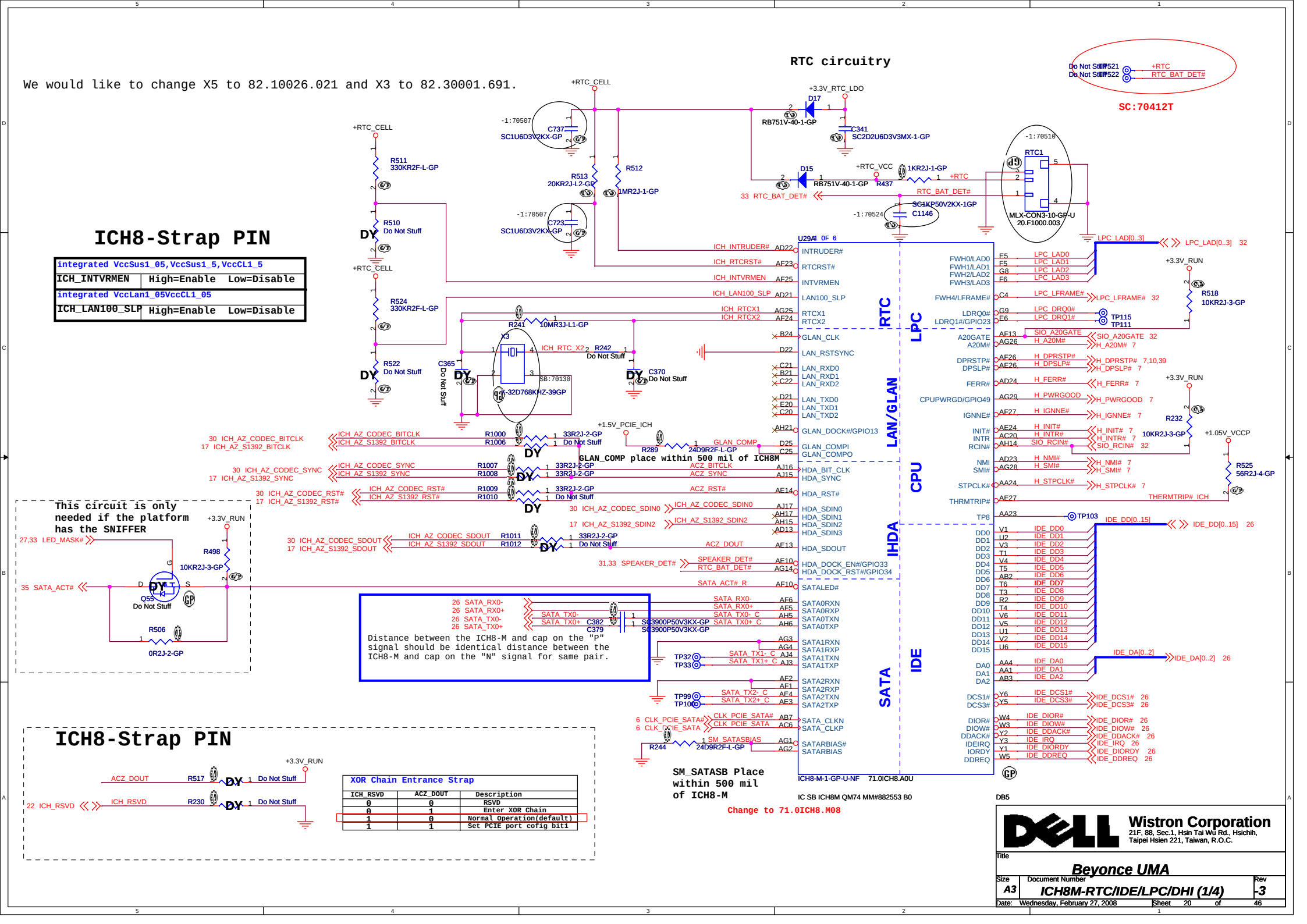

ICH8-Strap PIN

BOOT BIOS Strap		
PCI_GNT#0 (R166)	SPI_CS#1 (R167)	BOOT BIOS Location
0	1	SPI(Default)
1	0	PCI
1	1	LPC
A16 swap override strap		
PCI_GNT#3 (R168)	low = A16 swap override enable high = default	

	IDSEL	INT	REQ	GNT
1394/ MediaCard	AD17	C D	1	1

PCI Interface Routing

Add Buffers as need for Loading and Fanout concerns

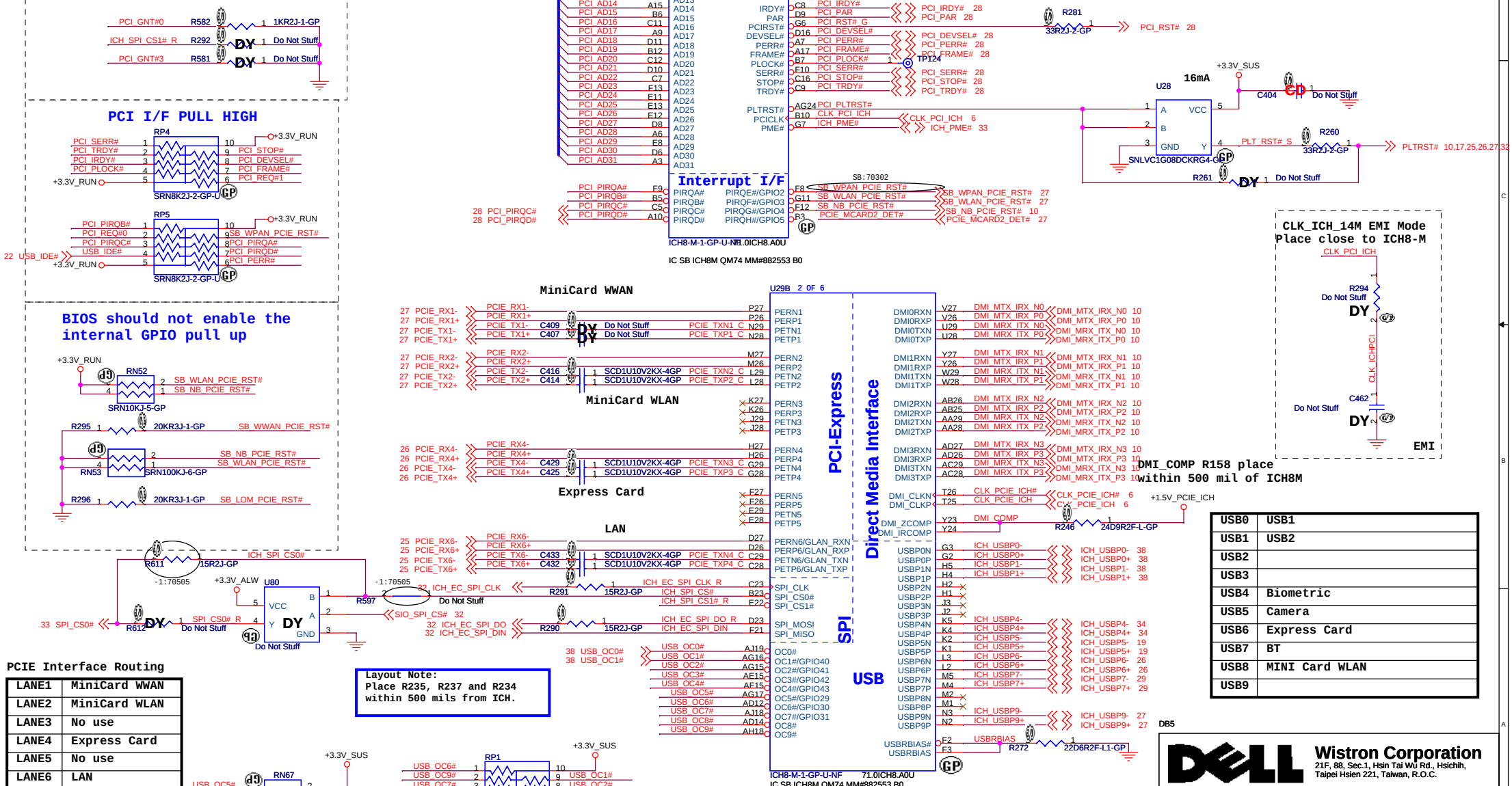

USB0	USB1
USB1	USB2
USB2	
USB3	
USB4	Biometric
USB5	Camera
USB6	Express Card
USB7	BT
USB8	MINI Card WLAN
USB9	

PCIE Interface Routing

LANE1	MiniCard WWAN
LANE2	MiniCard WLAN
LANE3	No use
LANE4	Express Card
LANE5	No use
LANE6	LAN

DB5

Wistron Corporation
21F, 88, Sec.1, Hsin Tai Wu Rd., Hsichih, Taipei Hsien 221, Taiwan, R.O.C.

Title: Beyonce UMA

Size: A3 | Document Number: ICH8M-PCIE/USB/SPI/DMI (2/4) | Rev: -3

Date: Wednesday, February 27, 2008 | Sheet 21 of 46

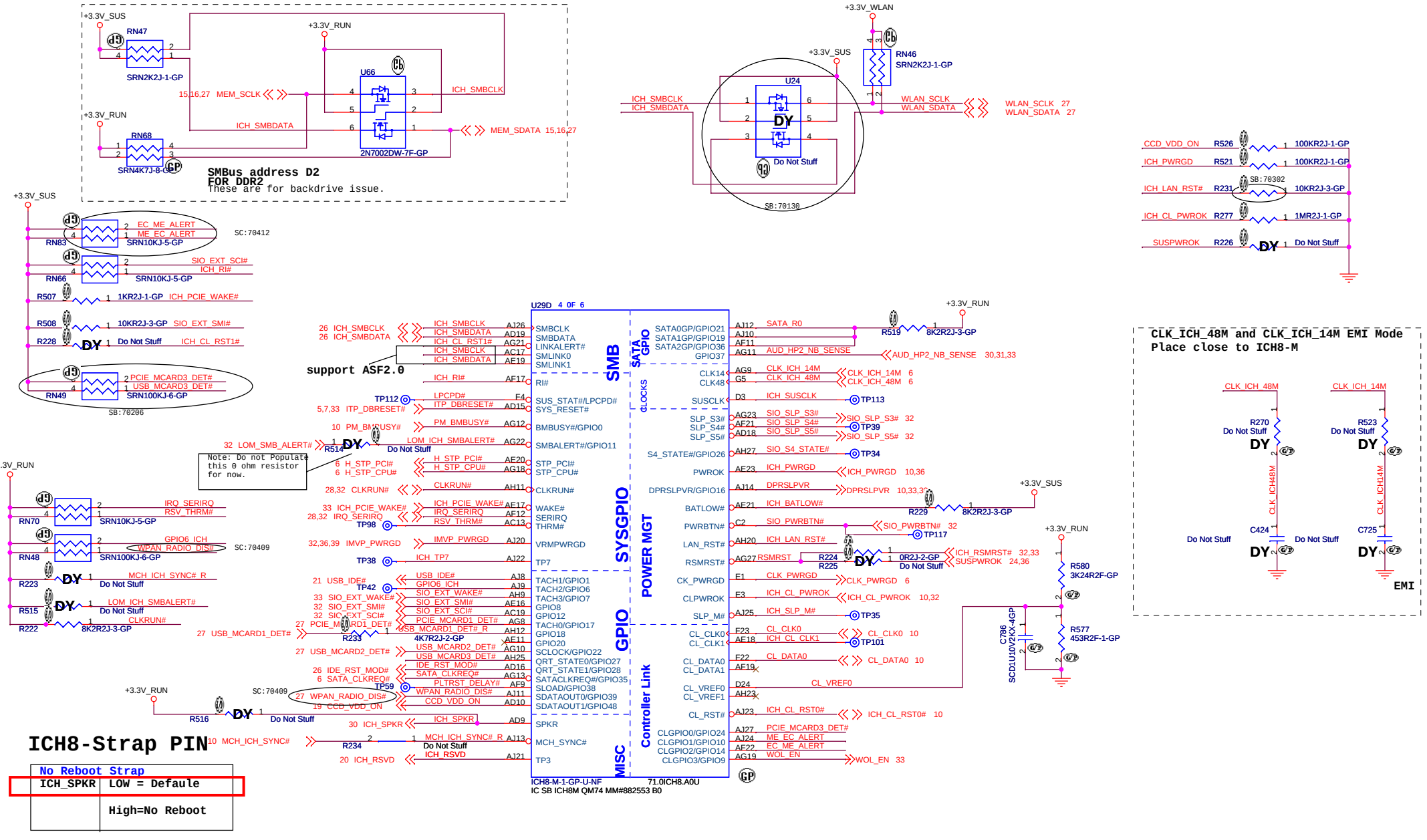
SMBus address D2
FOR DDR2
These are for backdrive issue.
support ASF2.0
Note: Do not Populate this 0 ohm resistor for now.
ICH8-Strap PIN
No Reboot Strap
ICH_SPKR LOW = Defaule
High=No Reboot
CLK_ICH_48M and CLK_ICH_14M EMI Mode
Place close to ICH8-M
U29D 4 0F 6
SMB
SATA GPIO
CLOCKS
SYSGPIO
POWER MGT
GPIO
Controller Link
MISC
ICH8-M-1-GP-U-NF
71.0ICH8.A0U
IC SB ICH8M QM74 MM#882553 B0
Wistron Corporation
21F, 88, Sec.1, Hsin Tai Wu Rd., Hsichih, Taipei Hsien 221, Taiwan, R.O.C.
Beyonce UMA
ICH8M-CL/PM/GPIO (3/4)
Size A3
Rev -3
Date: Wednesday, February 27, 2008
Sheet 22 of 46

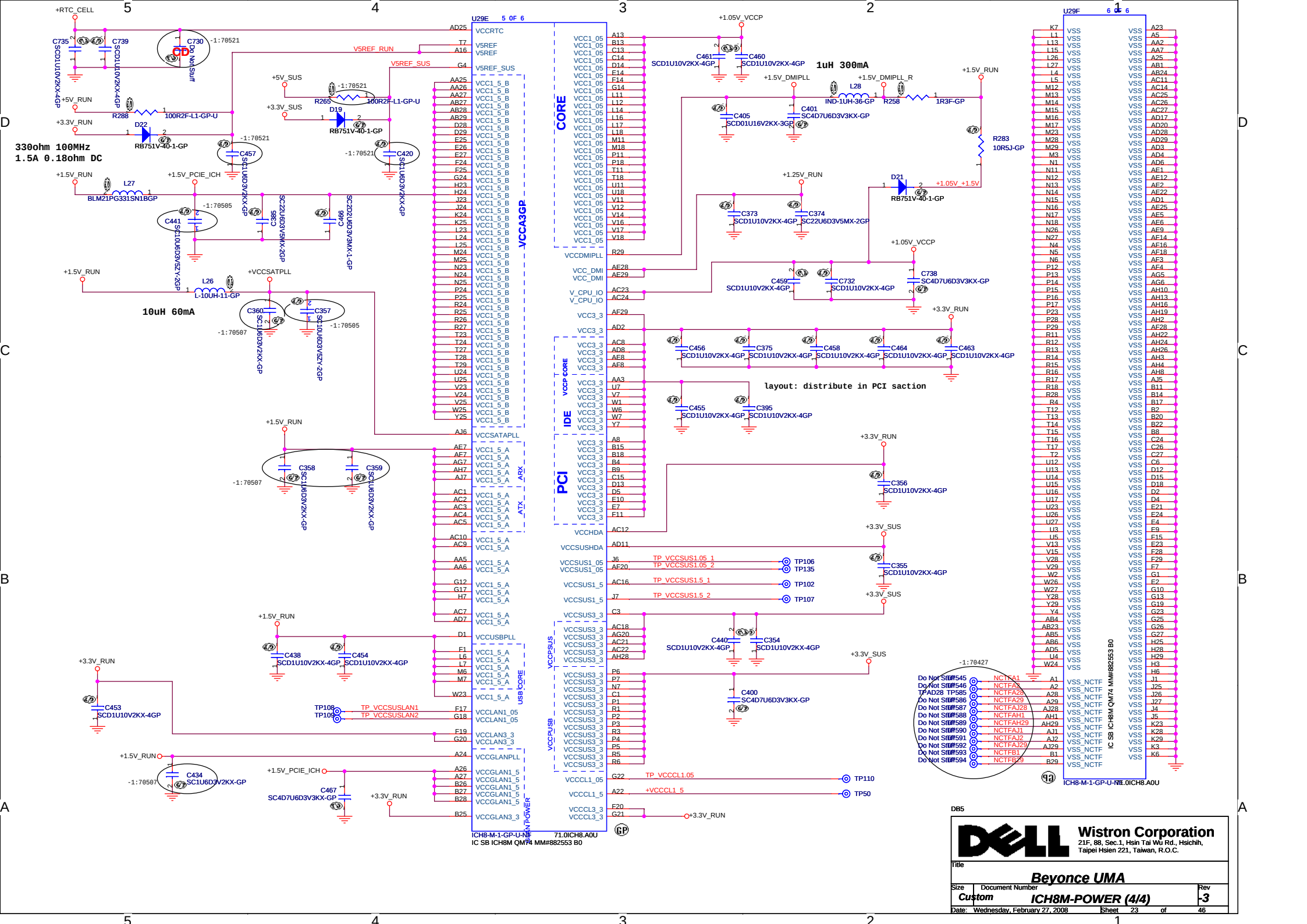
U29E 5 OF 6
U29F 6 OF 6
VCCA3GP
CORE
PCI
IDE
VCCP CORE
ATX
ARX
USB CORE
VCCPSUS
VCCPUSB
IN POWER
330ohm 100MHz
1.5A 0.18ohm DC
10uH 60mA
1uH 300mA
layout: distribute in PCI saction
ICH8-M-1-GP-U-NF 71.0ICH8.A0U
IC SB ICH8M QM74 MM#882553 B0
ICH8-M-1-GP-U-NF 71.0ICH8.A0U
IC SB ICH8M QM74 MM#882553 B0
Wistron Corporation
21F, 88, Sec.1, Hsin Tai Wu Rd., Hsichih,
Taipei Hsien 221, Taiwan, R.O.C.
Title
Beyonce UMA
Size Custom
Document Number ICH8M-POWER (4/4)
Rev -3
Date: Wednesday, February 27, 2008
Sheet 23 of 46

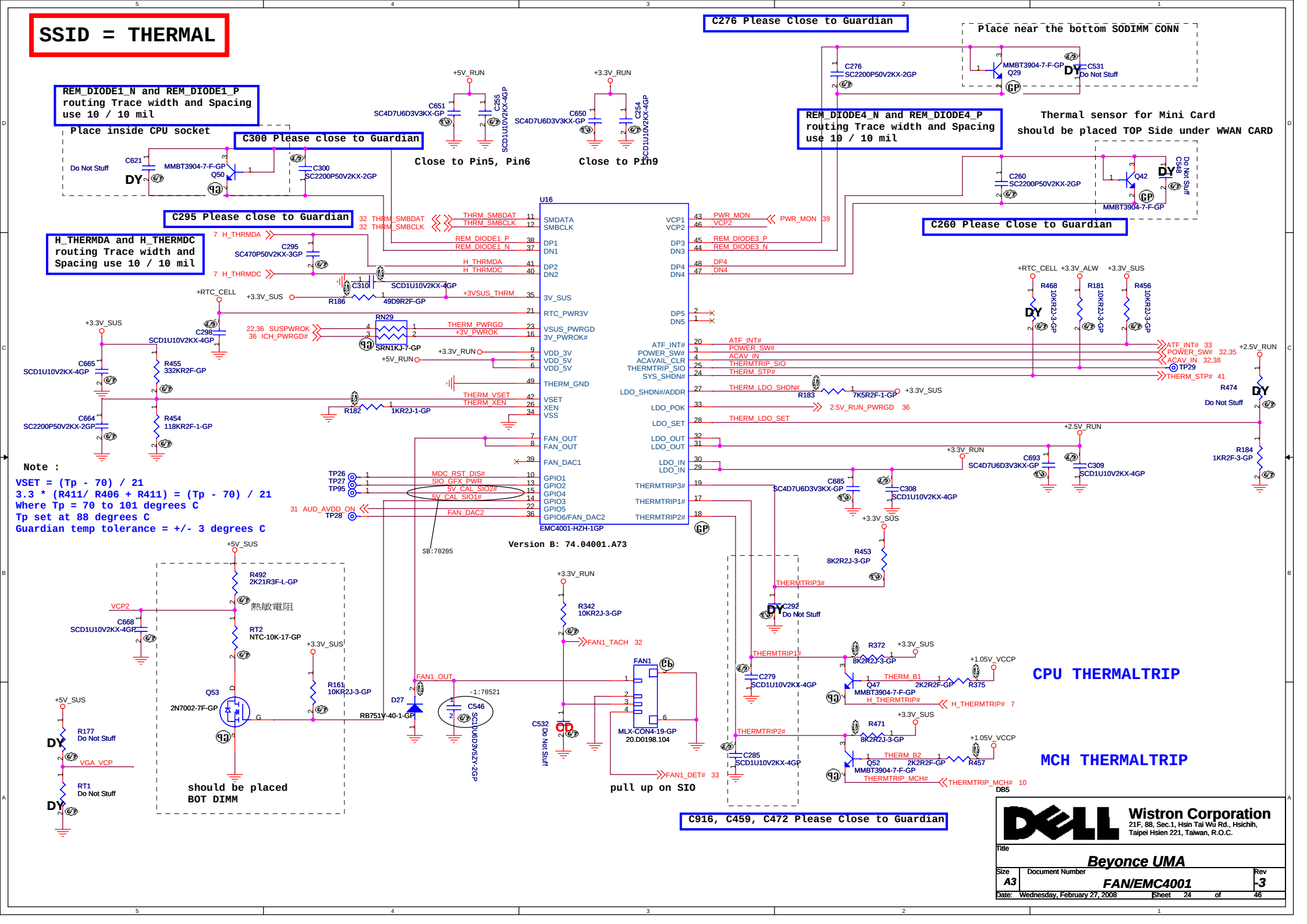
SSID = THERMAL
REM_DIODE1_N and REM_DIODE1_P routing Trace width and Spacing use 10 / 10 mil
Place inside CPU socket
C300 Please close to Guardian
C295 Please close to Guardian
H_THERMDA and H_THERMDC routing Trace width and Spacing use 10 / 10 mil
C276 Please Close to Guardian
Place near the bottom SODIMM CONN
REM_DIODE4_N and REM_DIODE4_P routing Trace width and Spacing use 10 / 10 mil
Thermal sensor for Mini Card should be placed TOP Side under WWAN CARD
C260 Please Close to Guardian
Close to Pin5, Pin6
Close to Pin9
U16
EMC4001-HZH-1GP
Version B: 74.04001.A73
Note :
VSET = (Tp - 70) / 21
3.3 * (R411/ R406 + R411) = (Tp - 70) / 21
Where Tp = 70 to 101 degrees C
Tp set at 88 degrees C
Guardian temp tolerance = +/- 3 degrees C
熱敏電阻
should be placed BOT DIMM
pull up on SIO
C916, C459, C472 Please Close to Guardian
CPU THERMALTRIP
MCH THERMALTRIP
Wistron Corporation
21F, 88, Sec.1, Hsin Tai Wu Rd., Hsichih, Taipei Hsien 221, Taiwan, R.O.C.
Title
Beyonce UMA
Size A3
Document Number FAN/EMC4001
Rev -3
Date: Wednesday, February 27, 2008
Sheet 24 of 46

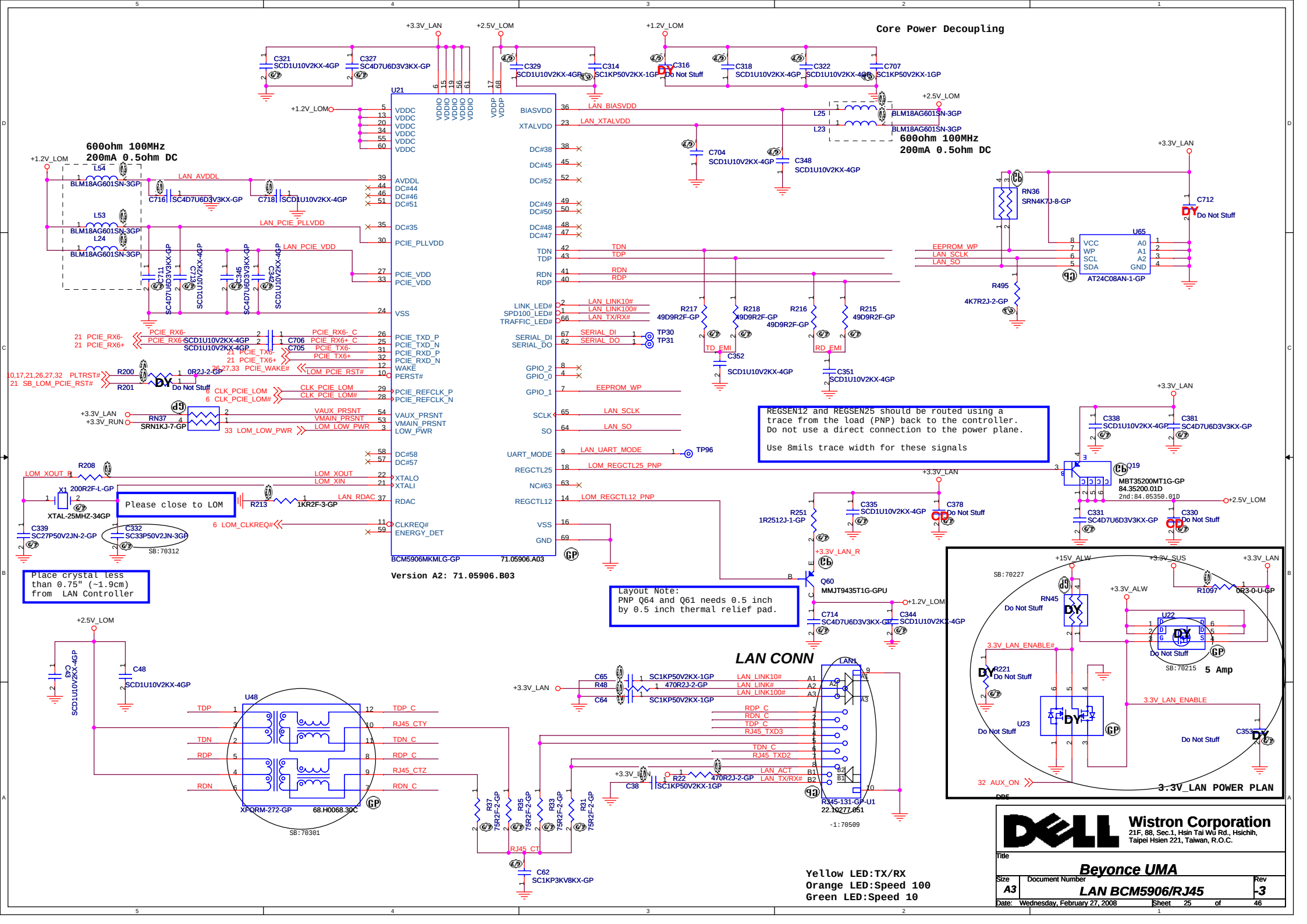
Core Power Decoupling
U21
BCM5906MKMLG-GP
71.05906.A03
Version A2: 71.05906.B03
600ohm 100MHz
200mA 0.5ohm DC
Please close to LOM
Place crystal less than 0.75" (~1.9cm) from LAN Controller
REGSEN12 and REGSEN25 should be routed using a trace from the load (PNP) back to the controller. Do not use a direct connection to the power plane.
Use 8mils trace width for these signals
Layout Note: PNP Q64 and Q61 needs 0.5 inch by 0.5 inch thermal relief pad.
LAN CONN
U48
XFORM-272-GP
68.H0068.30C
SB:70301
LAN1
RJ45-131-GP-U1
22.10277.051
-1:70509
Yellow LED:TX/RX
Orange LED:Speed 100
Green LED:Speed 10
3.3V_LAN POWER PLAN
5 Amp
Wistron Corporation
21F, 88, Sec.1, Hsin Tai Wu Rd., Hsichih, Taipei Hsien 221, Taiwan, R.O.C.
Title
Beyonce UMA
Size A3
Document Number
LAN BCM5906/RJ45
Rev -3
Date: Wednesday, February 27, 2008
Sheet 25 of 46

SSID = IDE & SATA

SATA HDD Connector

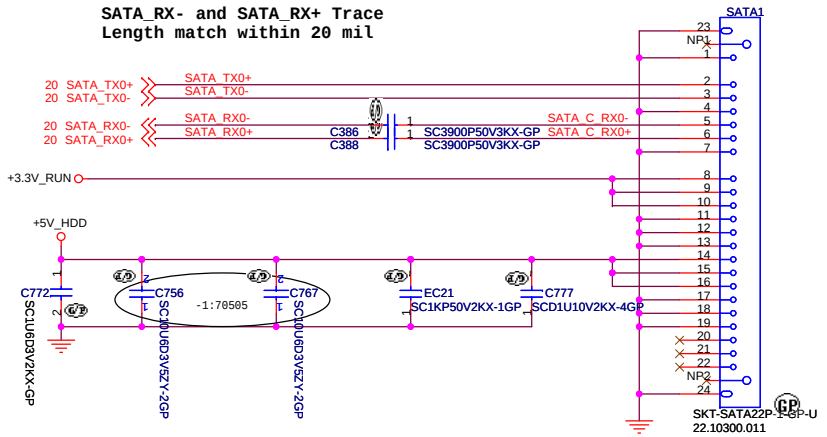

ODD Connector

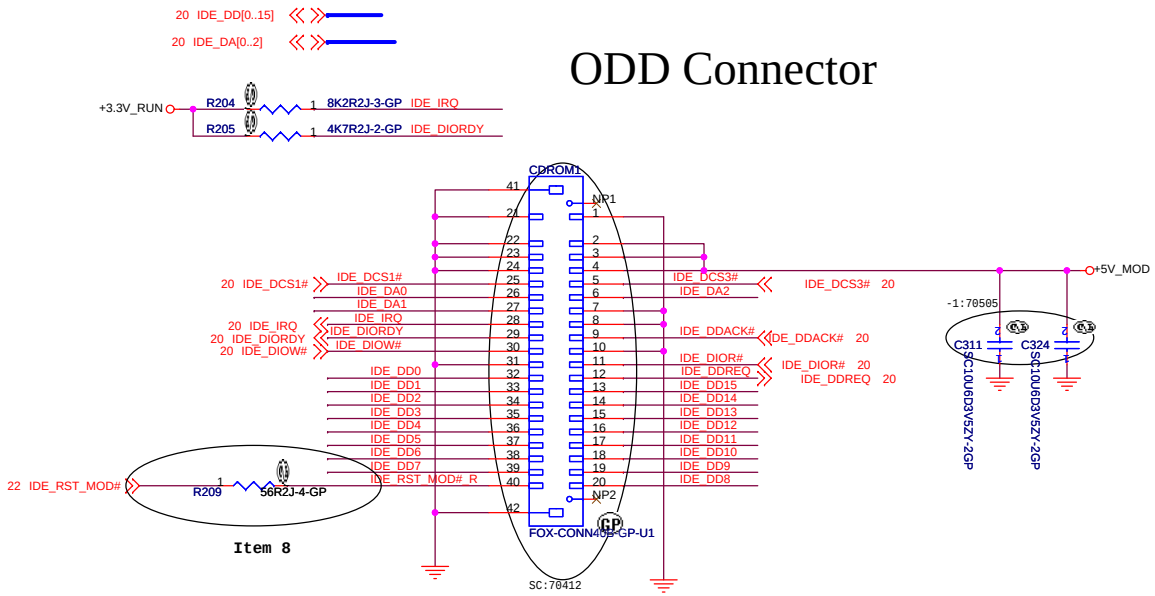

Express Card

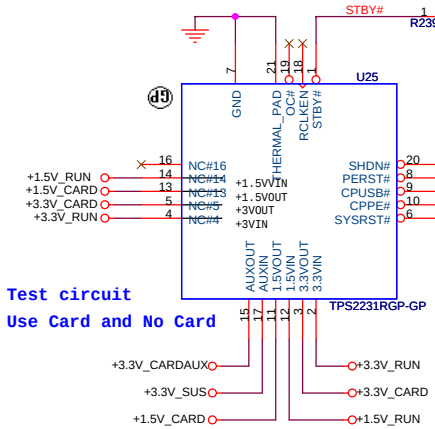

Test circuit

Use Card and No Card

+1.5V_CARD Max. 650mA, Average 500mA.
+3.3V_CARD Max. 1300mA, Average 1000mA
+3.3V_CARDAUX Max. 275mA

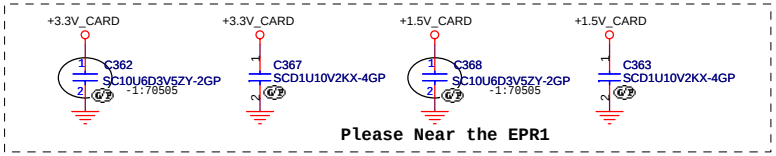

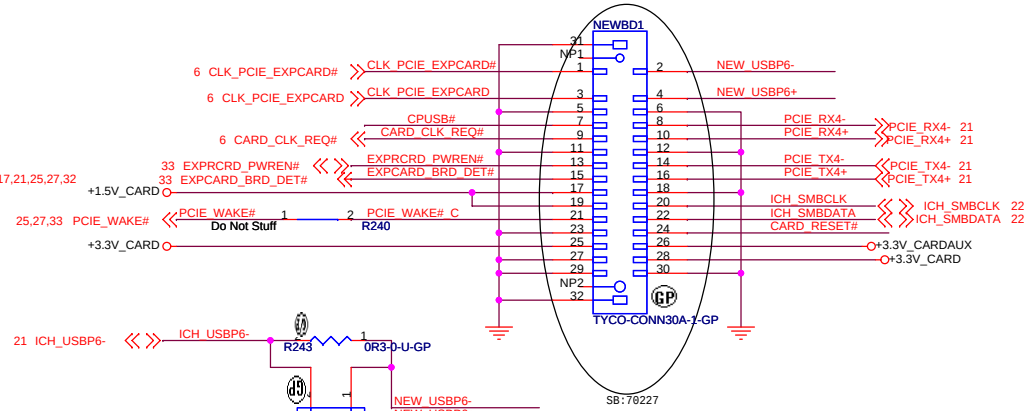

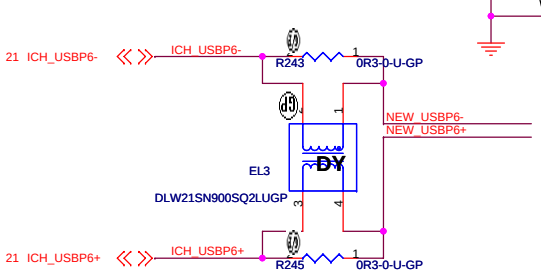

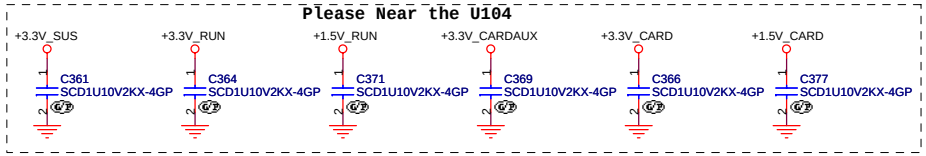

DB5

Wistron Corporation
21F, 88, Sec.1, Hsin Tai Wu Rd., Hsichih,
Taipei Hsien 221, Taiwan, R.O.C.

Title: ***Beyonce UMA***

Size	Document Number	Rev
A3	HDD/ODD/TO EXPRESS BD CONN	-3

Date: Wednesday, February 27, 2008 Sheet 26 of 46

JMINI Pin	Debug Pin Name	EC Pin
16	HOST_DEBUG_TX	70
17	HOST_DEBUG_RX	71
19	8051_TX	82
42	8051_RX	81

DEBUG PINS

MiniCard WLAN connector

WLAN1 — SKT-MINI52P-9-GP, 62.10043.411

Prevent backdrive when WoW is enabled.

C587 Please Near the MINICARD1/Pin24

This circuit is only needed if the platform has the SNIFFER

SB:070301

Layout note: Place caps EC10-EC14 close Mini Card connector.

MiniCard WWAN connector

WWAN1

C337 Please Near the MINICARD2/Pin24

SC:70409

SC:70330 need close to SIM CN pin

SIM1

Layout note: Place caps EC87,EC88 close SIM Card connector.

For Debug card used only.

SB:70227 SB:70215 SB:70301 SB:70106 SB:70302 SB:70216

Close WLAN1

Wistron Corporation
21F, 88, Sec.1, Hsin Tai Wu Rd., Hsichih, Taipei Hsien 221, Taiwan, R.O.C.

Title: Beyonce UMA

Size: A3 | Document Number: MINICARD/WLAN/WWAN | Rev: -1

Date: Wednesday, February 27, 2008 | Sheet 27 of 46

SSID = 1394

600ohm 100MHz
200mA 0.5ohm DC

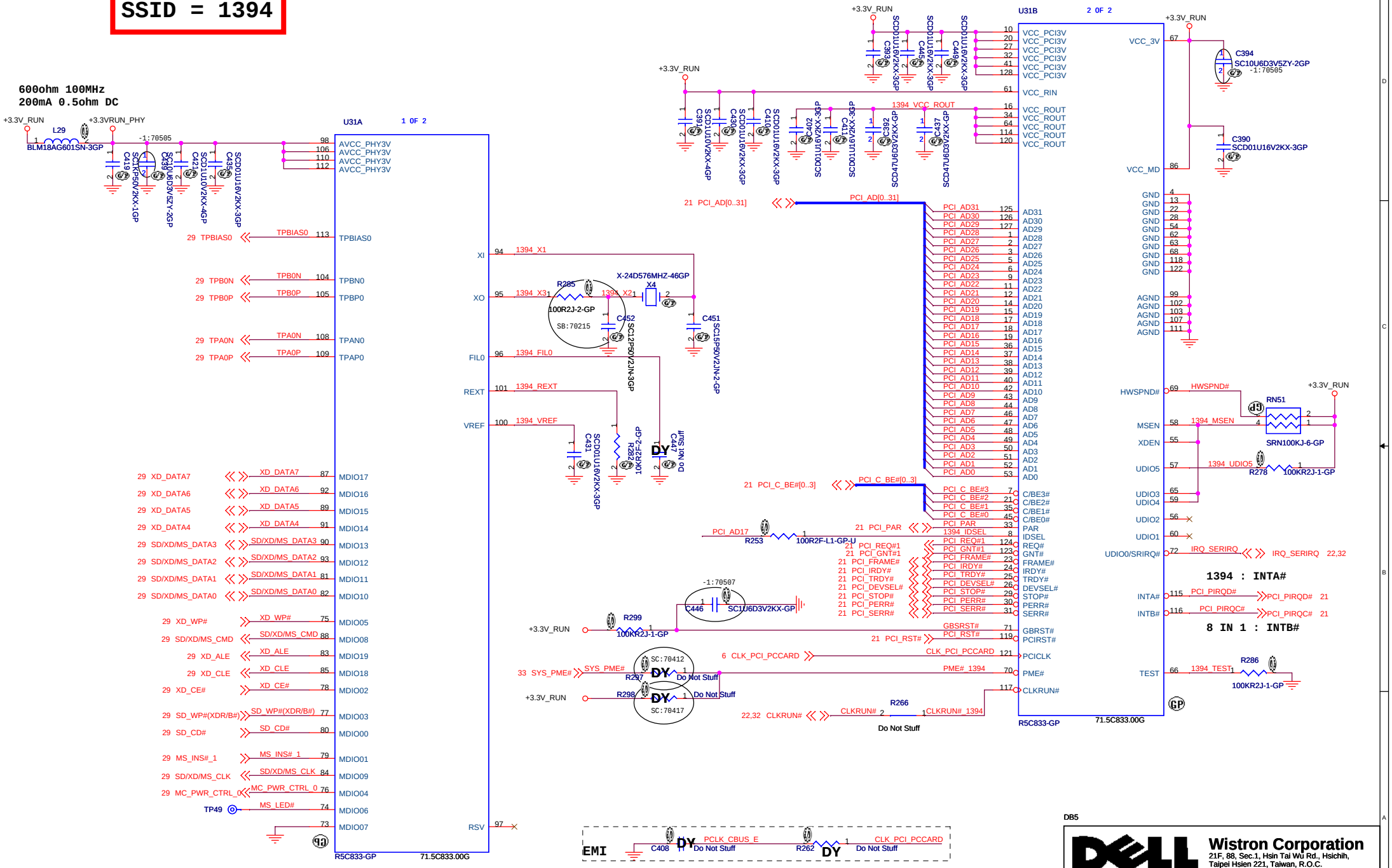

SSID = 1394

Card Reader CONN

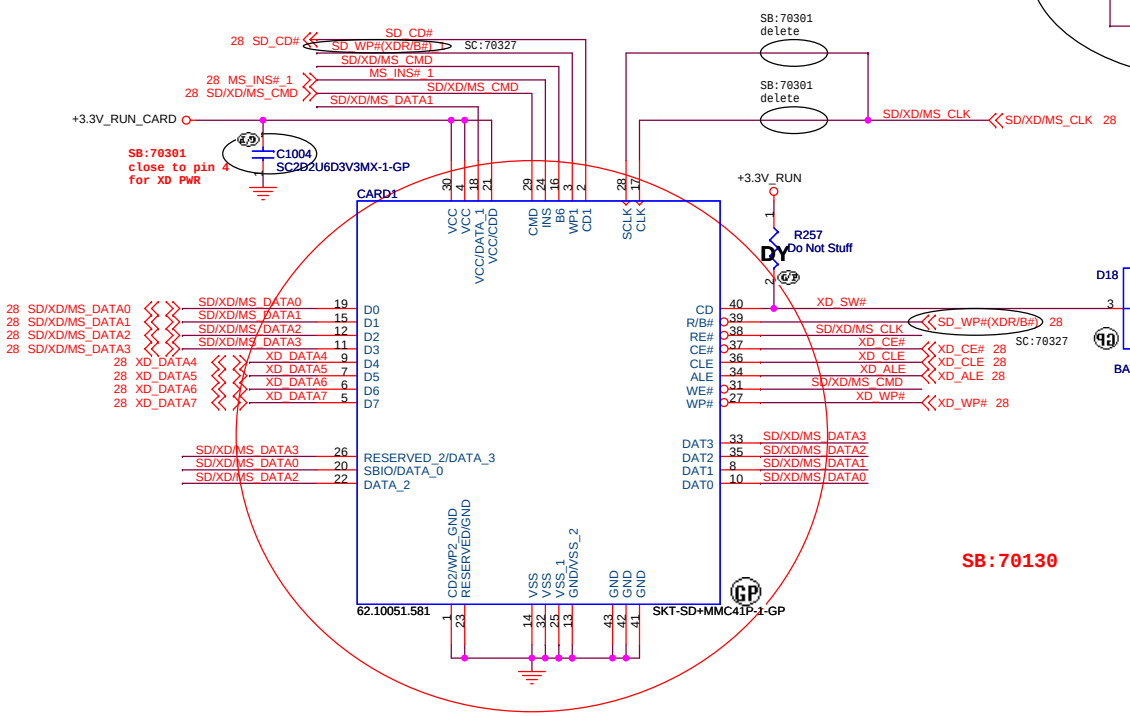

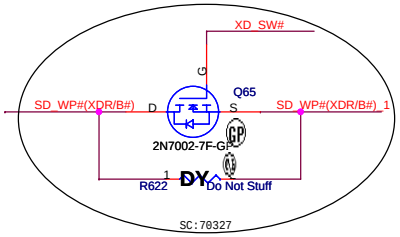

SNIFFER BOARD CONN

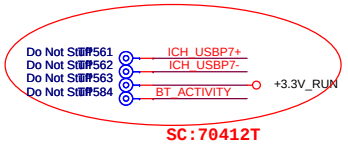

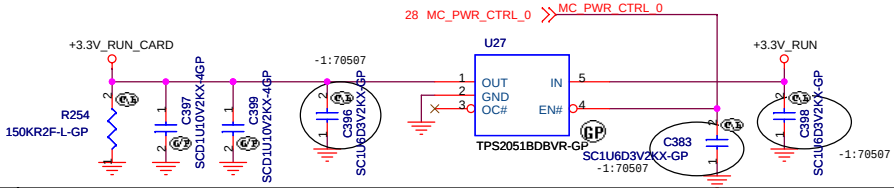

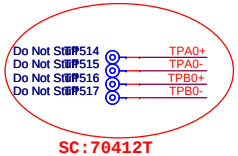

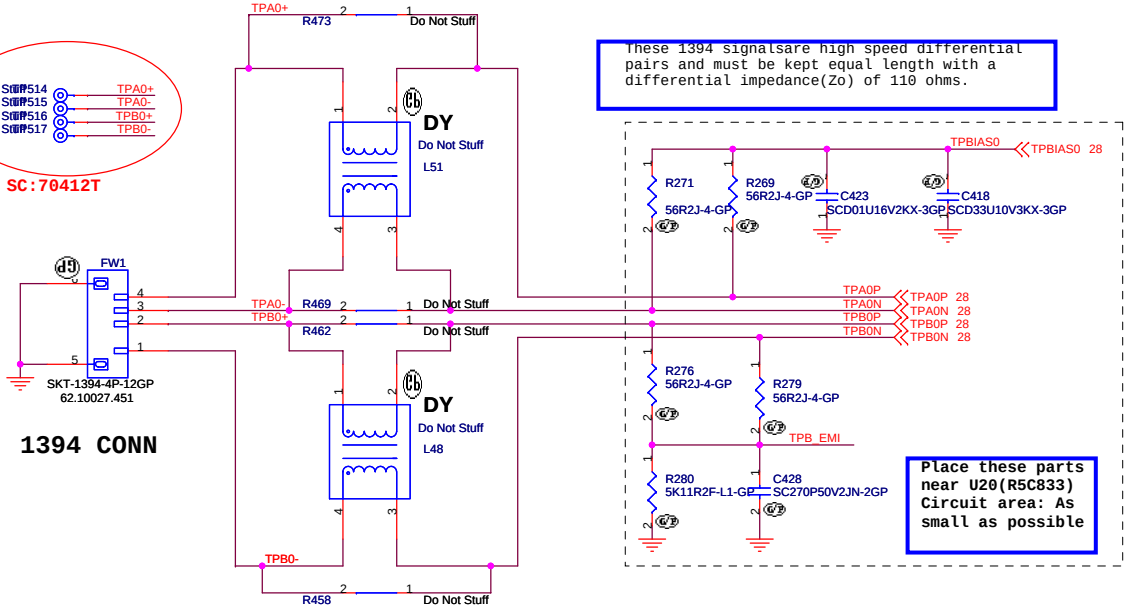

These 1394 signalsare high speed differential pairs and must be kept equal length with a differential impedance(Zo) of 110 ohms.

Place these parts near U20(R5C833) Circuit area: As small as possible

Bluetooth Module conn.

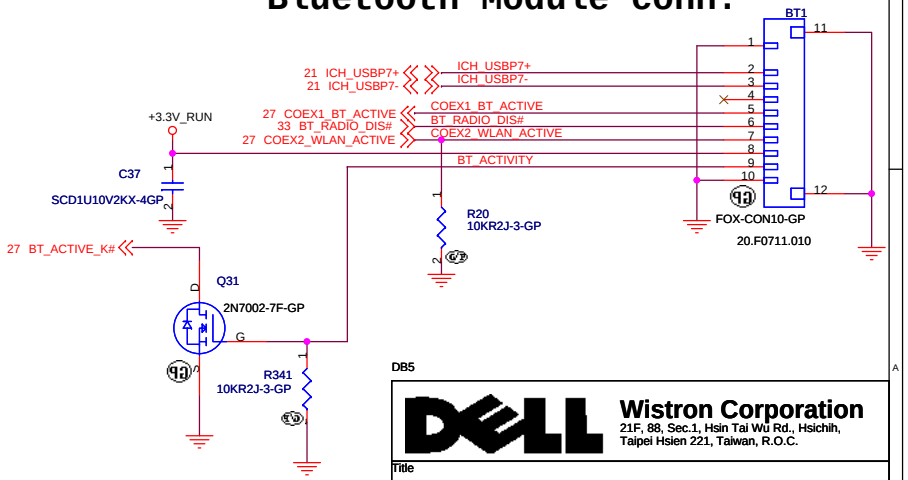

DB5

Wistron Corporation
21F, 88, Sec.1, Hsin Tai Wu Rd., Hsichih, Taipei Hsien 221, Taiwan, R.O.C.

Title: Beyonce UMA

Size: A3 | Document Number: 8in1 /1394/SNIFFER BD CON/BT | Rev: -3

Date: Wednesday, February 27, 2008 | Sheet 29 of 46

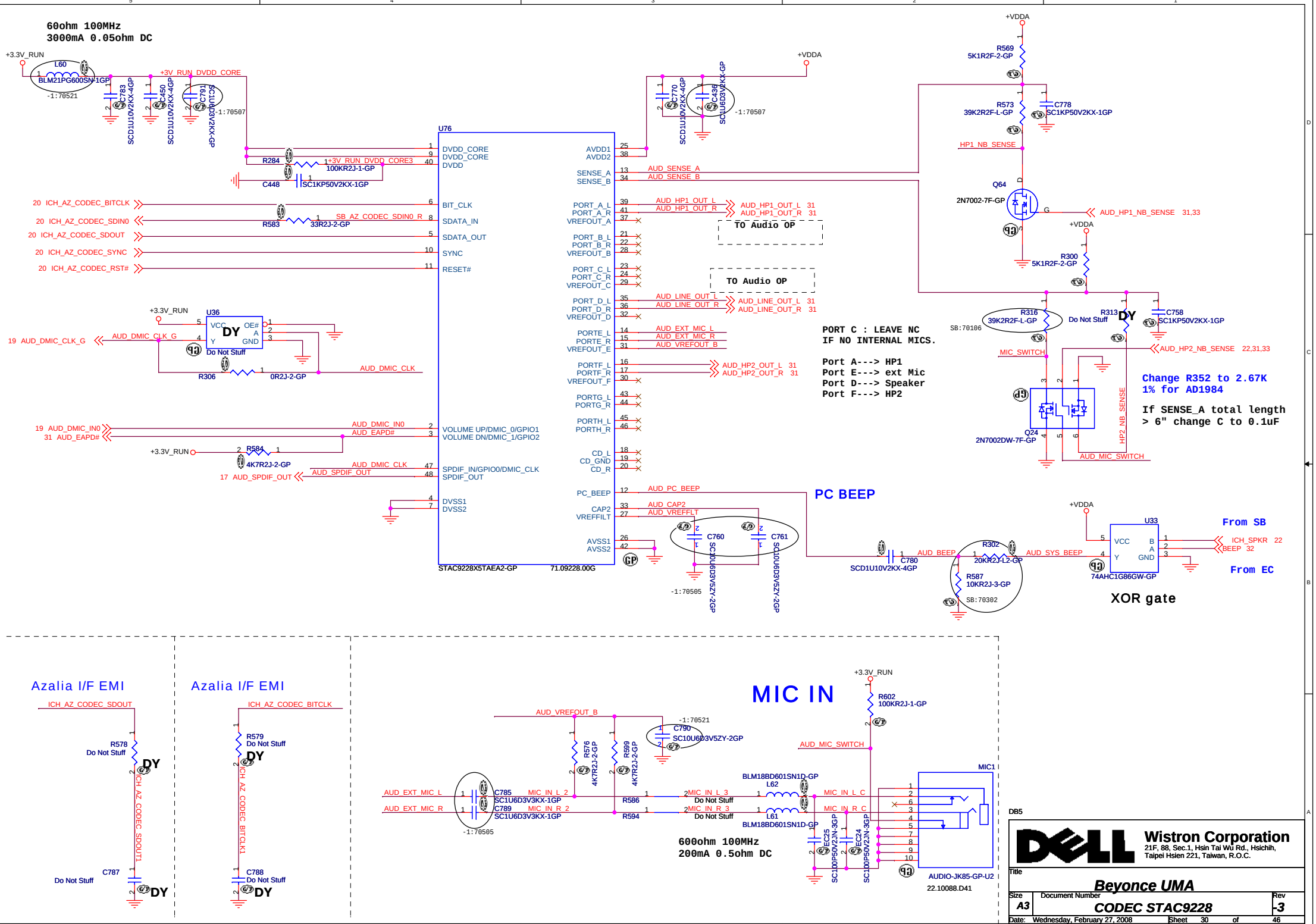

Wistron Corporation
21F, 88, Sec.1, Hsin Tai Wu Rd., Hsichih,
Taipei Hsien 221, Taiwan, R.O.C.

Title: Beyonce UMA

Size: A3 | Document Number: CODEC STAC9228 | Rev: -3

Date: Wednesday, February 27, 2008 | Sheet 30 of 46

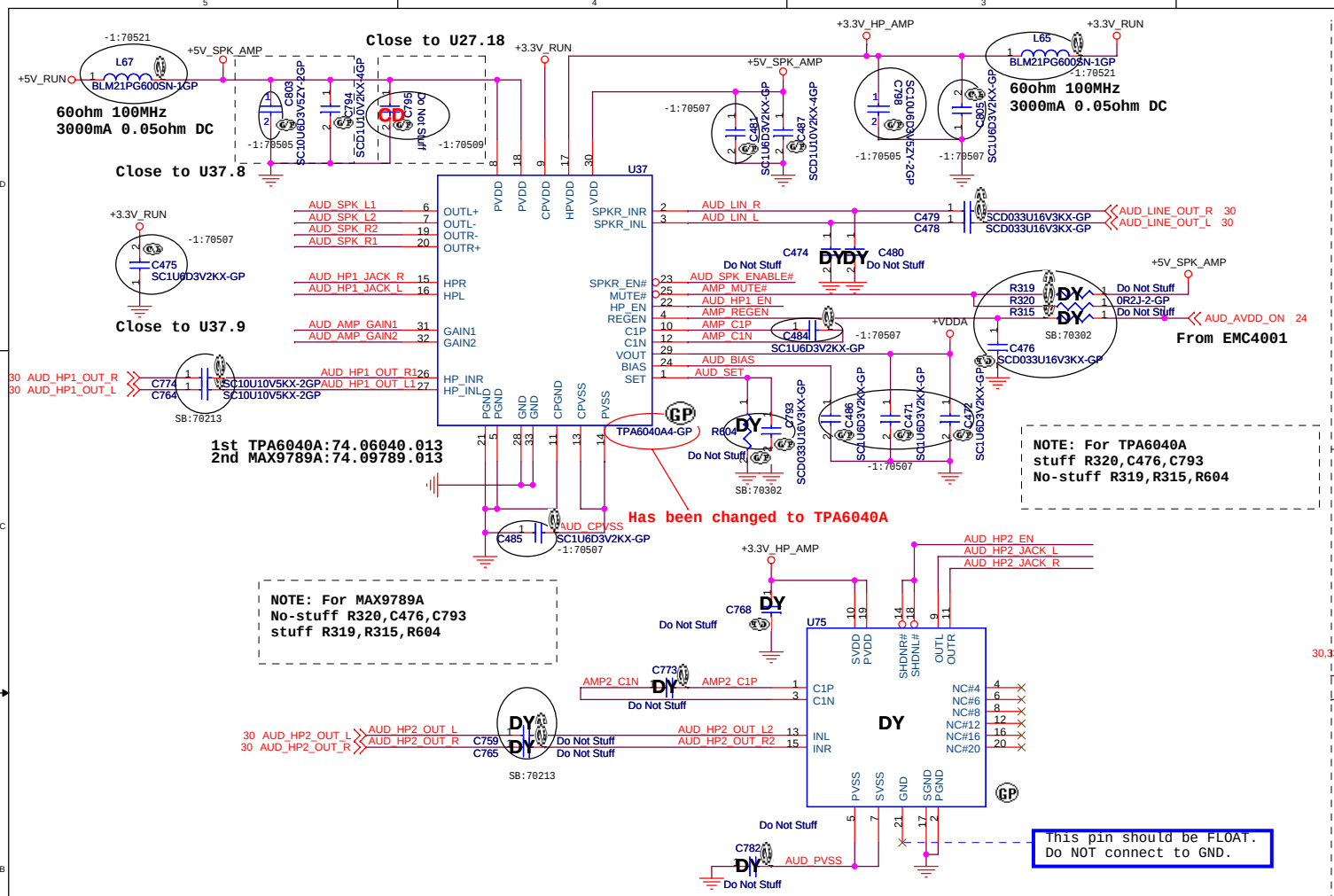

Speaker

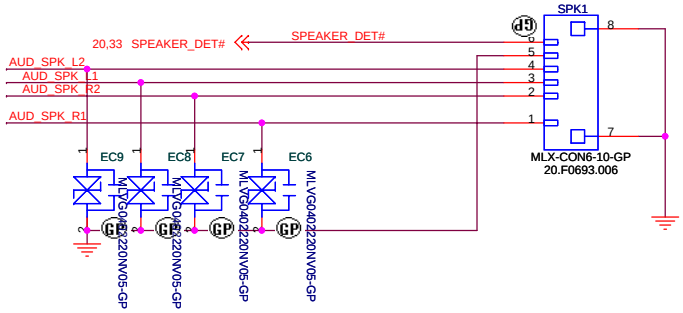

LINE1 OUT

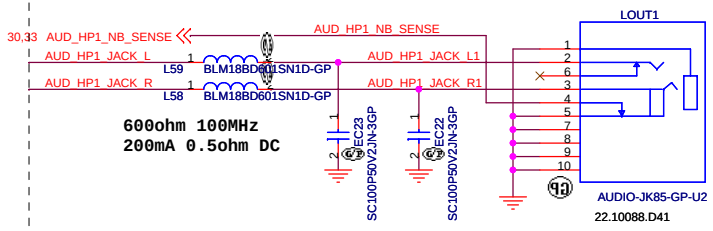

LINE2 OUT

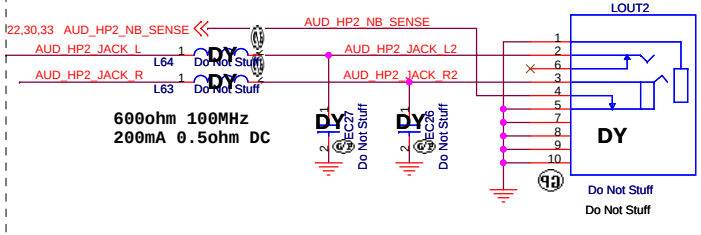

GAIN SETTING

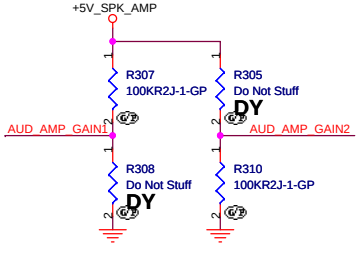

GAIN1	GAIN2	GAIN
0	0	6dB
0	1	10dB
1	0	15.6dB
1	1	21.6dB

Signal inverter for speaker shutdown

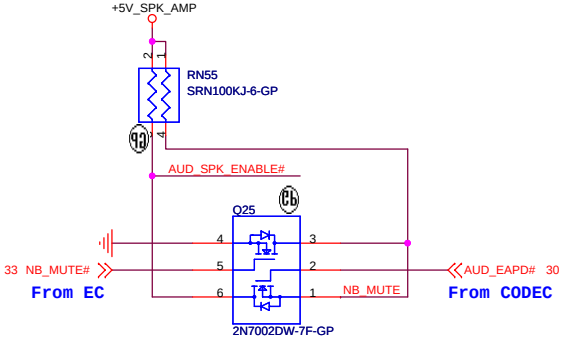

AND Gate for HP Mute Function

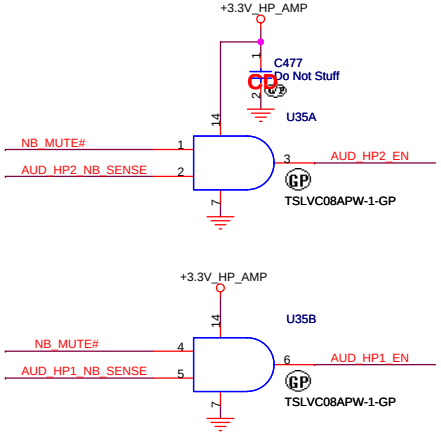

DB5

Wistron Corporation
21F, 88, Sec.1, Hsin Tai Wu Rd., Hsichih,
Taipei Hsien 221, Taiwan, R.O.C.

Title: **Beyonce UMA**

Size: A3 | Document Number: **AUDIO AMP** | Rev: -3

Date: Wednesday, February 27, 2008 | Sheet 31 of 46

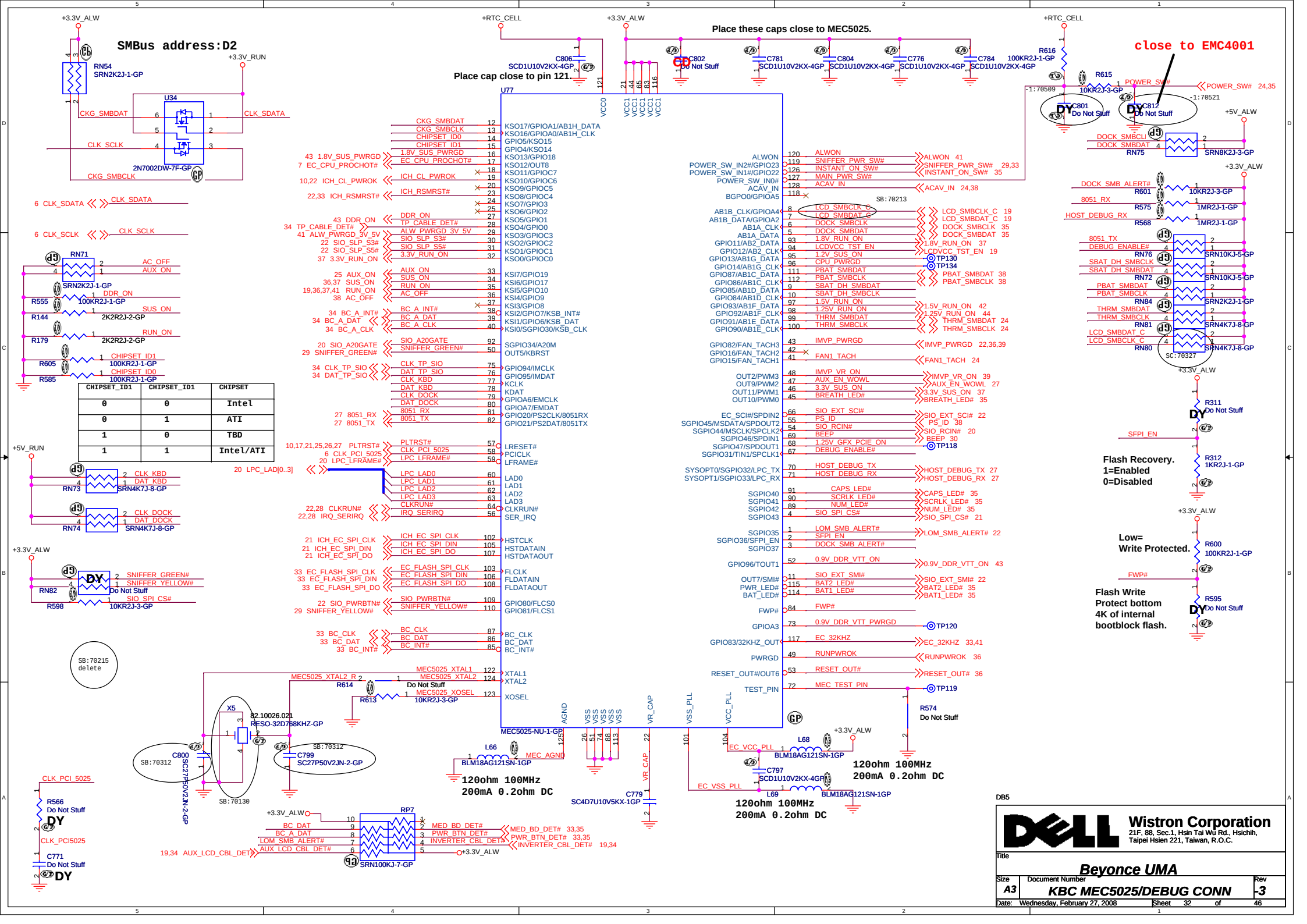

CHIPSET_ID1	CHIPSET_ID1	CHIPSET
0	0	Intel
0	1	ATI
1	0	TBD
1	1	Intel/ATI

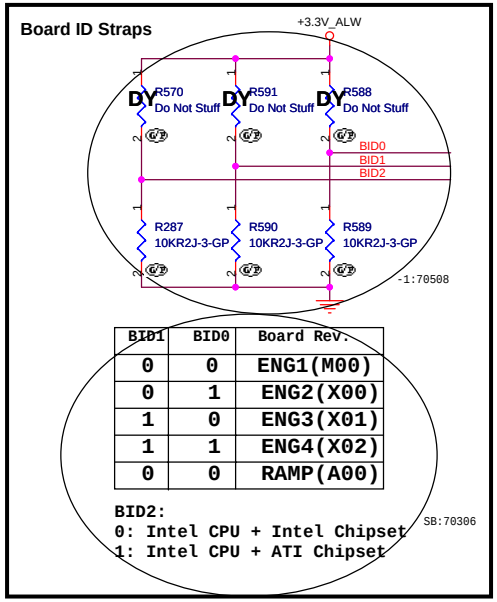

BID1	BID0	Board Rev.
0	0	ENG1(M00)
0	1	ENG2(X00)
1	0	ENG3(X01)
1	1	ENG4(X02)
0	0	RAMP(A00)

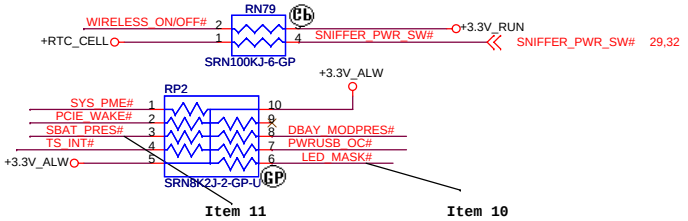

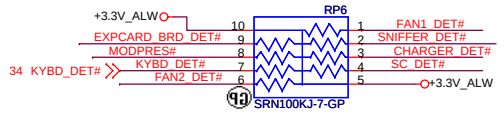

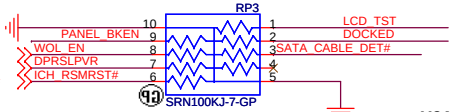

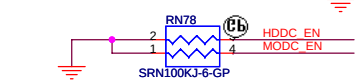

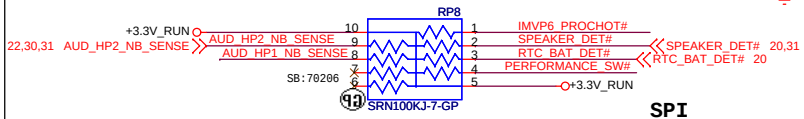

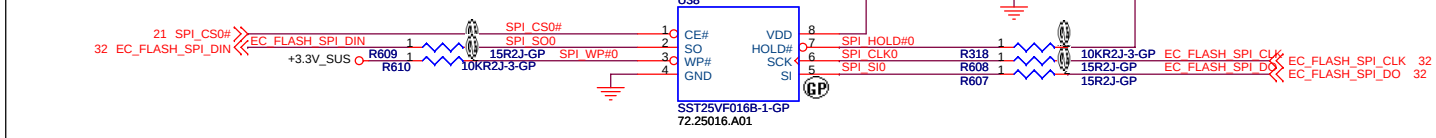

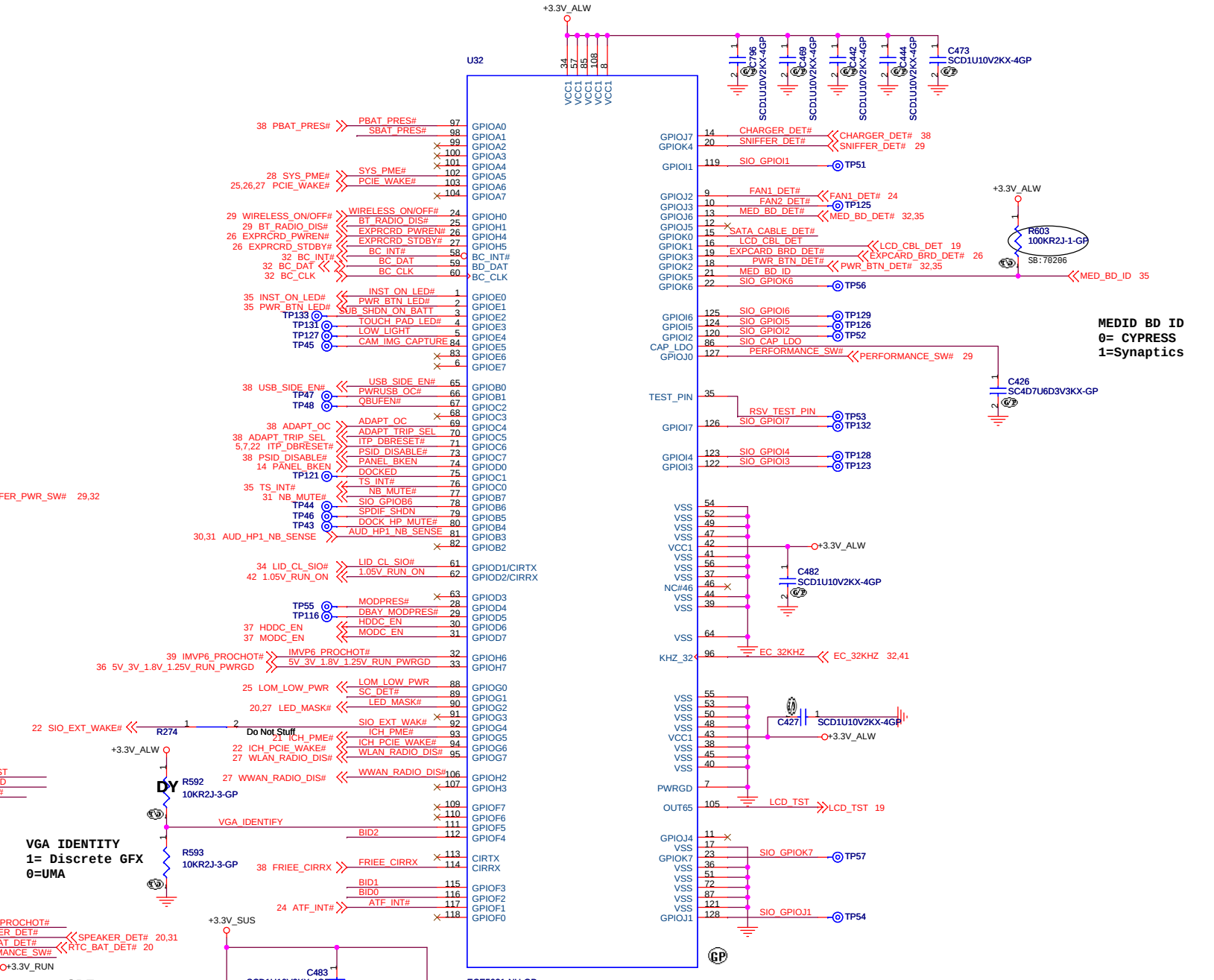

DB5

Wistron Corporation
21F, 88, Sec.1, Hsin Tai Wu Rd., Hsichih,
Taipei Hsien 221, Taiwan, R.O.C.

Title: **Beyonce UMA**

Size: A3 | Document Number: **SIO ECE5011/SPI ROM** | Rev: -3

Date: Wednesday, February 27, 2008 | Sheet 33 of 46

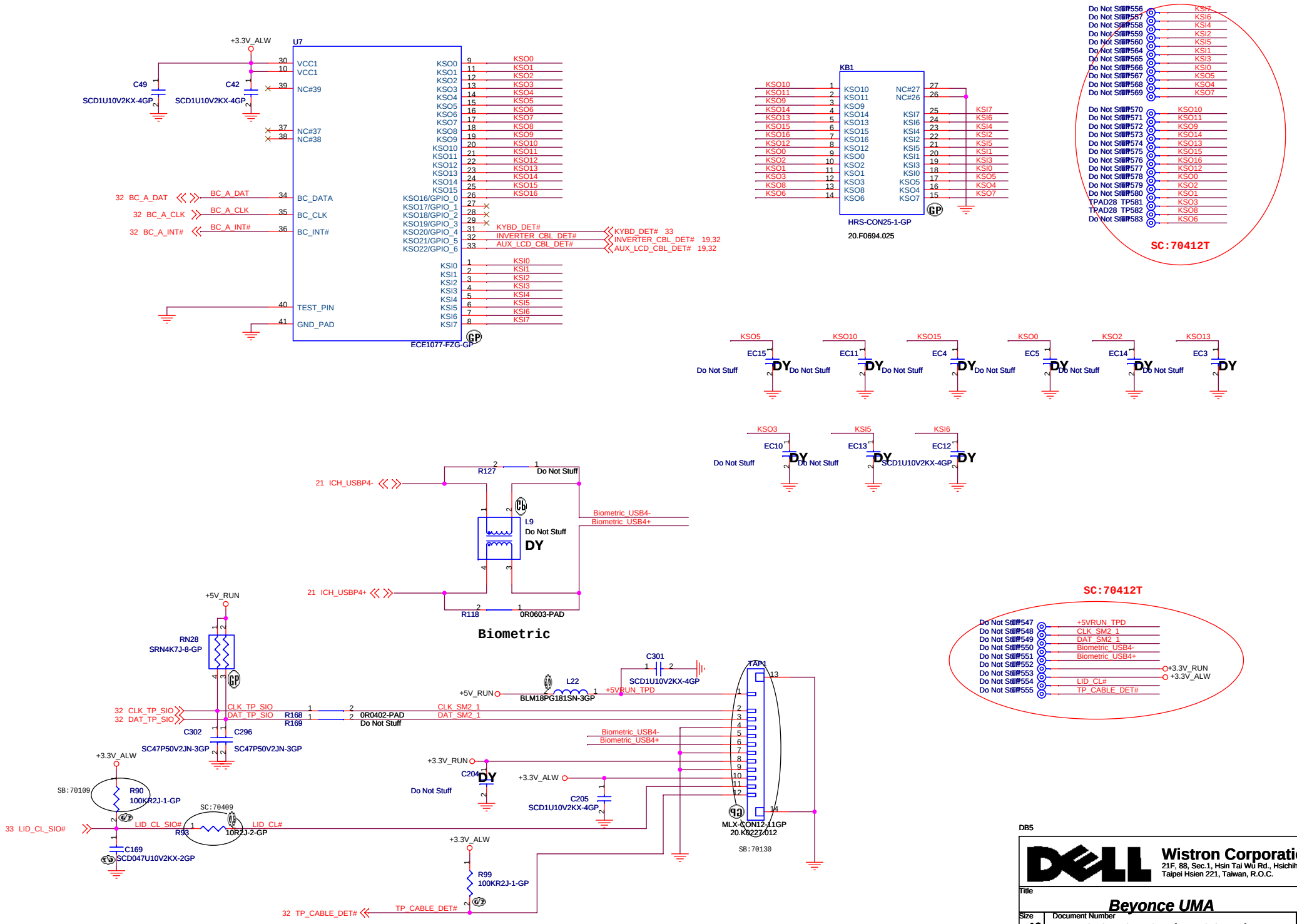
U7
ECE1077-FZG-GP
+3.3V_ALW
C49
SCD1U10V2KX-4GP
C42
SCD1U10V2KX-4GP
VCC1
NC#39
NC#37
NC#38
BC_DATA
BC_CLK
BC_INT#
TEST_PIN
GND_PAD
32 BC_A_DAT
32 BC_A_CLK
32 BC_A_INT#
KYBD_DET#
INVERTER_CBL_DET#
AUX_LCD_CBL_DET#
KYBD_DET# 33
INVERTER_CBL_DET# 19,32
AUX_LCD_CBL_DET# 19,32
KB1
HRS-CON25-1-GP
20.F0694.025
SC:70412T
EC15
EC11
EC4
EC5
EC14
EC3
EC10
EC13
EC12
Do Not Stuff
DY
SCD1U10V2KX-4GP
R127
R118
0R0603-PAD
21 ICH_USBP4-
21 ICH_USBP4+
L9
Biometric_USB4-
Biometric_USB4+
Biometric
+5V_RUN
RN28
SRN4K7J-8-GP
32 CLK_TP_SIO
32 DAT_TP_SIO
CLK_TP_SIO
DAT_TP_SIO
R168
R169
0R0402-PAD
CLK_SM2_1
DAT_SM2_1
C302
C296
SC47P50V2JN-3GP
C301
L22
BLM18PG181SN-3GP
+5VRUN_TPD
TAP1
MLX-CON12-11GP
20.K0227.012
SB:70130
+3.3V_ALW
SB:70109
R90
100KR2J-1-GP
SC:70409
R93
10R2J-2-GP
33 LID_CL_SIO#
LID_CL_SIO#
LID_CL#
C169
SCD047U10V2KX-2GP
C204
C205
R99
100KR2J-1-GP
32 TP_CABLE_DET#
TP_CABLE_DET#
+5VRUN_TPD
CLK_SM2_1
DAT_SM2_1
Biometric_USB4-
Biometric_USB4+
LID_CL#
TP_CABLE_DET#
+3.3V_RUN
+3.3V_ALW
DB5
Wistron Corporation
21F, 88, Sec.1, Hsin Tai Wu Rd., Hsichih,
Taipei Hsien 221, Taiwan, R.O.C.
Title
Beyonce UMA
Size
A3
Document Number
SIO ECE1077/KB CONN/TP
Rev
-3
Date: Wednesday, February 27, 2008
Sheet 34 of 46

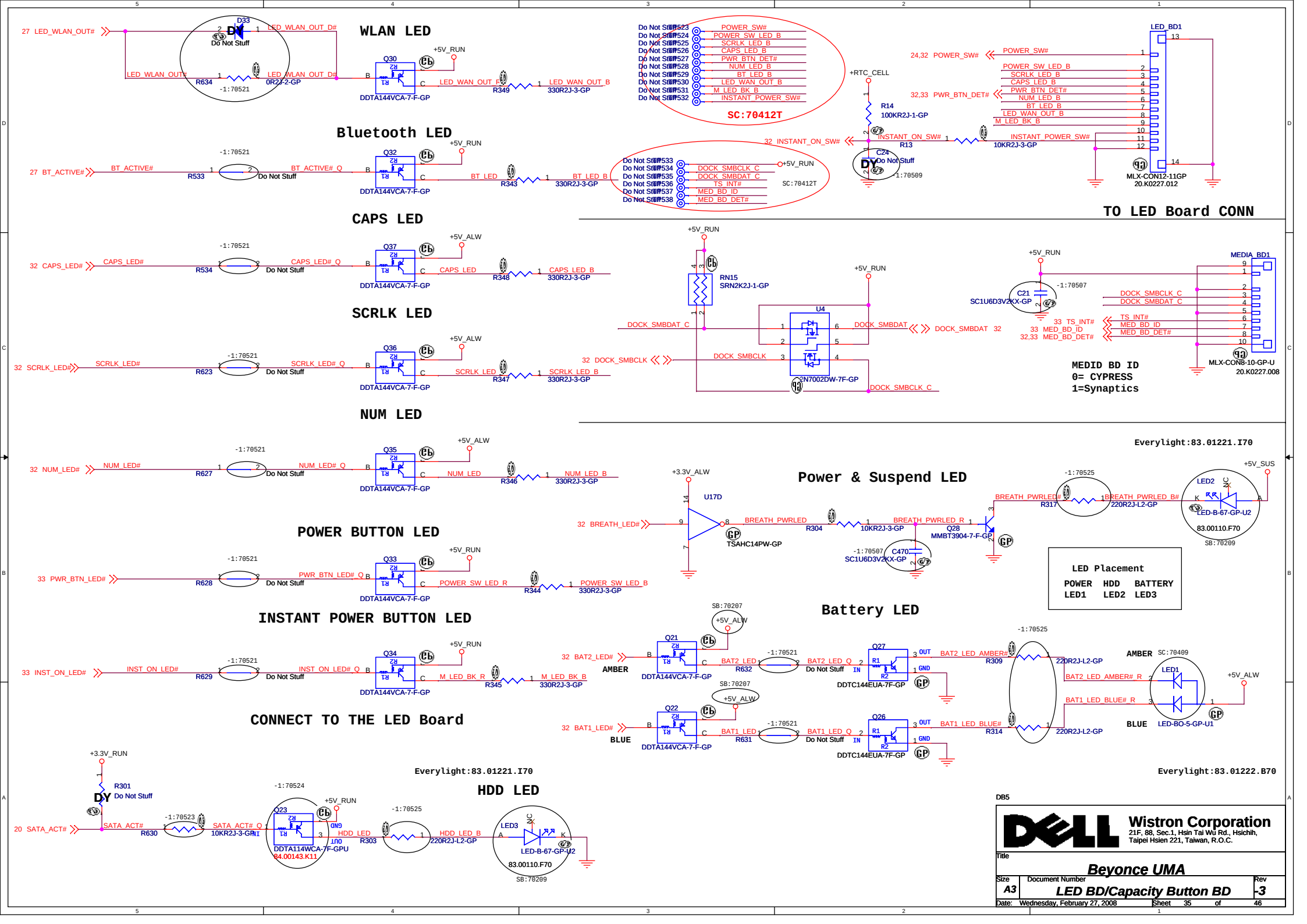
WLAN LED
Bluetooth LED
CAPS LED
SCRLK LED
NUM LED
POWER BUTTON LED
INSTANT POWER BUTTON LED
CONNECT TO THE LED Board
HDD LED
TO LED Board CONN
Power & Suspend LED
Battery LED
MEDID BD ID
0= CYPRESS
1=Synaptics
LED Placement
POWER LED1
HDD LED2
BATTERY LED3
Everylight:83.01221.I70
Everylight:83.01222.B70
SC:70412T
MLX-CON12-11GP
20.K0227.012
MLX-CON8-10-GP-U
20.K0227.008
Wistron Corporation
21F, 88, Sec.1, Hsin Tai Wu Rd., Hsichih,
Taipei Hsien 221, Taiwan, R.O.C.
Beyonce UMA
LED BD/Capacity Button BD
Size A3
Rev -3
Date: Wednesday, February 27, 2008
Sheet 35 of 46

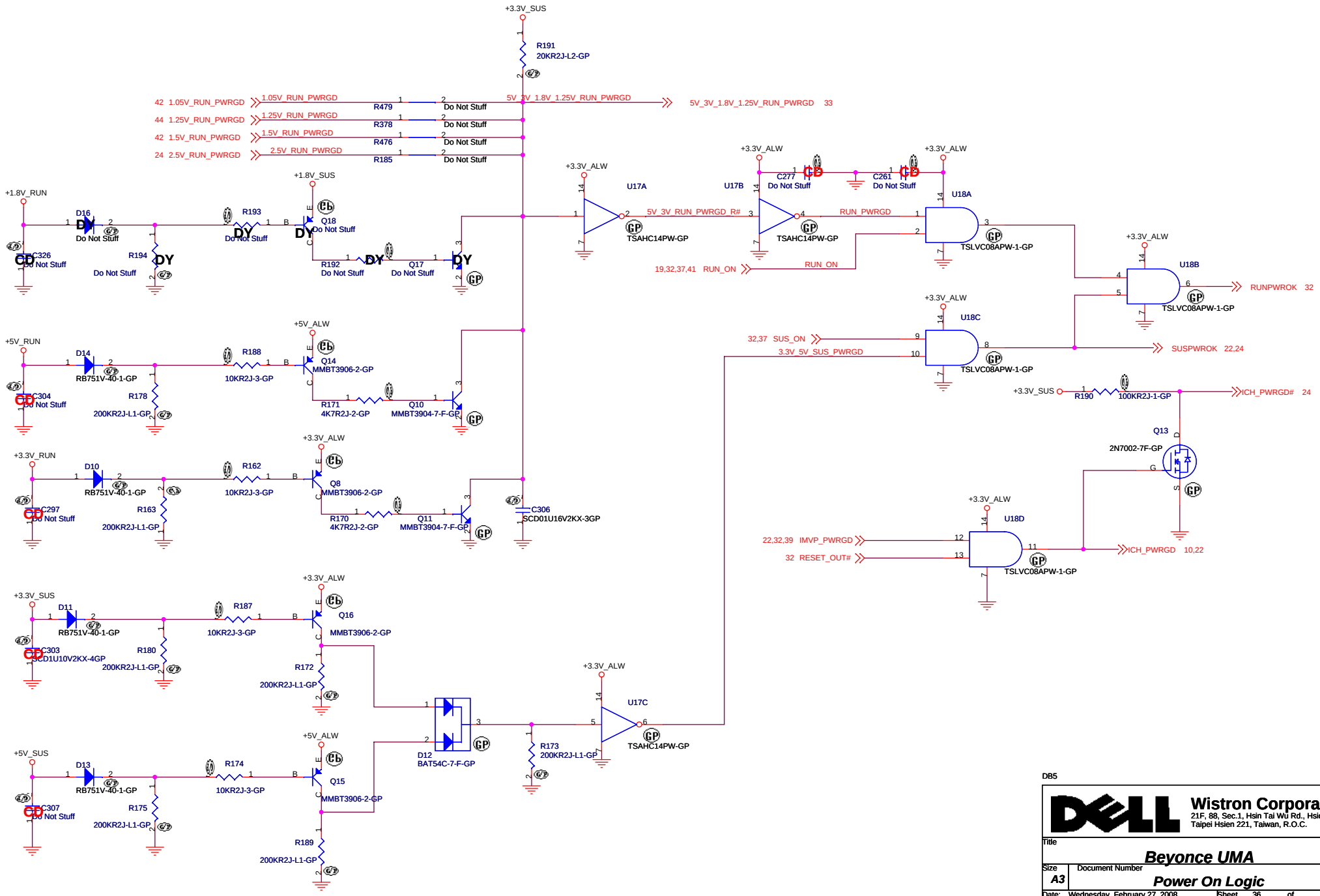

DB5

Wistron Corporation
21F, 88, Sec.1, Hsin Tai Wu Rd., Hsichih,
Taipei Hsien 221, Taiwan, R.O.C.

Title: **Beyonce UMA**

Size: A3 | Document Number: **Power On Logic** | Rev: -3

Date: Wednesday, February 27, 2008 | Sheet 36 of 46

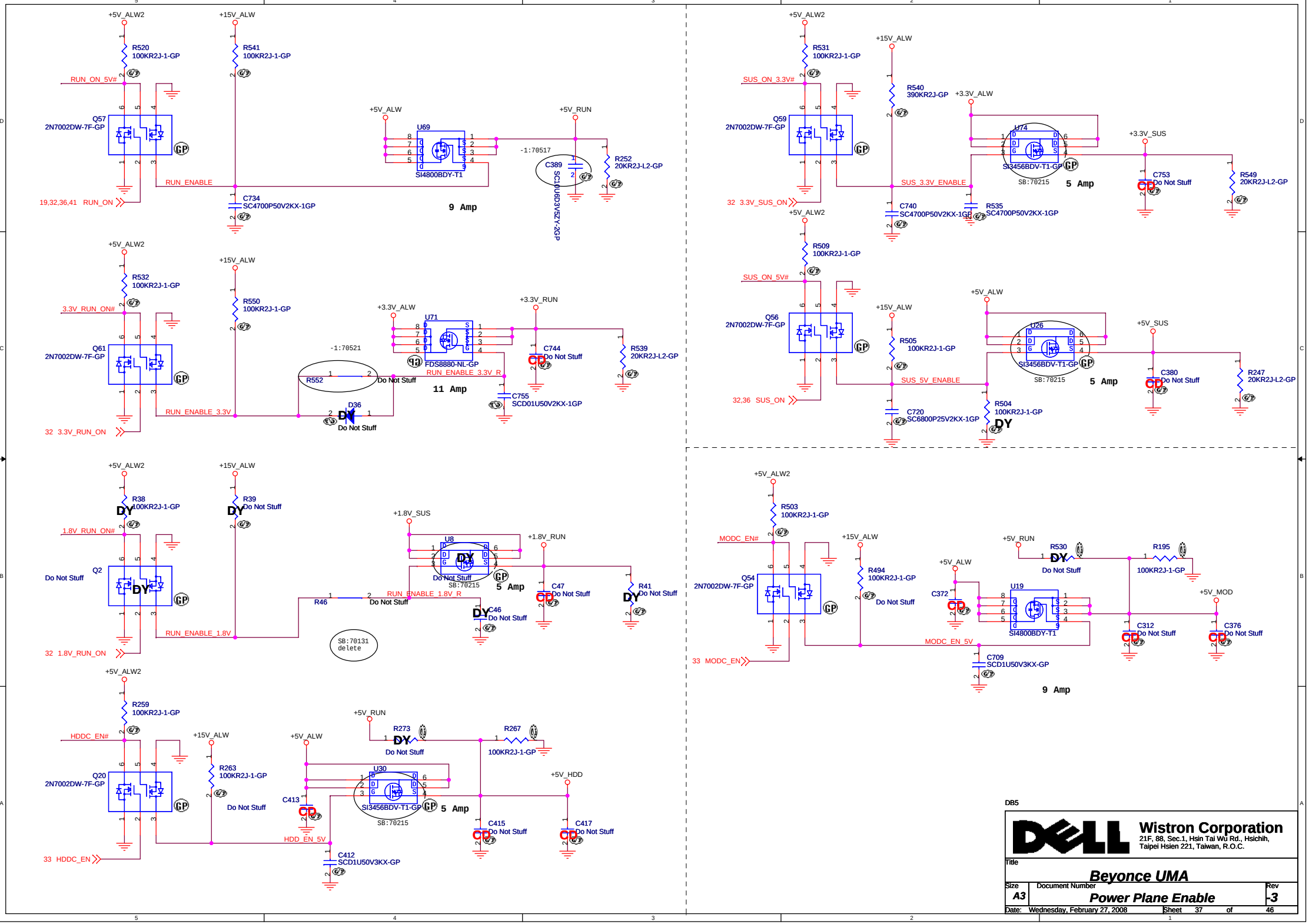
+5V_ALW2
R520
100KR2J-1-GP
RUN_ON_5V#
Q57
2N7002DW-7F-GP
19,32,36,41 RUN_ON
+15V_ALW
R541
100KR2J-1-GP
RUN_ENABLE
C734
SC4700P50V2KX-1GP
+5V_ALW
U69
SI4800BDY-T1
+5V_RUN
-1:70517
C389
SC1U06V3ZY-2GP
R252
20KR2J-L2-GP
9 Amp
+5V_ALW2
R532
100KR2J-1-GP
3.3V_RUN_ON#
Q61
2N7002DW-7F-GP
32 3.3V_RUN_ON
+15V_ALW
R550
100KR2J-1-GP
RUN_ENABLE_3.3V
+3.3V_ALW
U71
FDS8880-NL-GP
-1:70521
R552
Do Not Stuff
D36
Do Not Stuff
RUN_ENABLE_3.3V_R
11 Amp
C755
SCD01U50V2KX-1GP
+3.3V_RUN
C744
Do Not Stuff
R539
20KR2J-L2-GP
+5V_ALW2
R531
100KR2J-1-GP
SUS_ON_3.3V#
Q59
2N7002DW-7F-GP
32 3.3V_SUS_ON
+15V_ALW
R540
390KR2J-GP
SUS_3.3V_ENABLE
C740
SC4700P50V2KX-1GP
+3.3V_ALW
U74
SI3456BDV-T1-GP
SB:70215
5 Amp
R535
SC4700P50V2KX-1GP
+3.3V_SUS
C753
Do Not Stuff
R549
20KR2J-L2-GP
+5V_ALW2
R509
100KR2J-1-GP
SUS_ON_5V#
Q56
2N7002DW-7F-GP
32,36 SUS_ON
+15V_ALW
R505
100KR2J-1-GP
SUS_5V_ENABLE
C720
SC6800P25V2KX-1GP
+5V_ALW
U26
SI3456BDV-T1-GP
SB:70215
5 Amp
R504
100KR2J-1-GP
+5V_SUS
C380
Do Not Stuff
R247
20KR2J-L2-GP
+5V_ALW2
R38
100KR2J-1-GP
1.8V_RUN_ON#
Q2
Do Not Stuff
32 1.8V_RUN_ON
+15V_ALW
R39
Do Not Stuff
RUN_ENABLE_1.8V
+1.8V_SUS
U8
Do Not Stuff
SB:70215
5 Amp
R46
Do Not Stuff
RUN_ENABLE_1.8V_R
C46
Do Not Stuff
+1.8V_RUN
C47
Do Not Stuff
R41
Do Not Stuff
SB:70131
delete
+5V_ALW2
R503
100KR2J-1-GP
MODC_EN#
Q54
2N7002DW-7F-GP
33 MODC_EN
+15V_ALW
R494
100KR2J-1-GP
Do Not Stuff
+5V_ALW
C372
+5V_RUN
R530
Do Not Stuff
R195
100KR2J-1-GP
U19
SI4800BDY-T1
MODC_EN_5V
C709
SCD1U50V3KX-GP
+5V_MOD
C312
Do Not Stuff
C376
Do Not Stuff
9 Amp
+5V_ALW2
R259
100KR2J-1-GP
HDDC_EN#
Q20
2N7002DW-7F-GP
33 HDDC_EN
+15V_ALW
R263
100KR2J-1-GP
Do Not Stuff
+5V_ALW
C413
HDD_EN_5V
C412
SCD1U50V3KX-GP
+5V_RUN
R273
Do Not Stuff
R267
100KR2J-1-GP
U30
SI3456BDV-T1-GP
SB:70215
5 Amp
C415
Do Not Stuff
+5V_HDD
C417
Do Not Stuff
DB5
Wistron Corporation
21F, 88, Sec.1, Hsin Tai Wu Rd., Hsichih,
Taipei Hsien 221, Taiwan, R.O.C.
Title
Beyonce UMA
Size
A3
Document Number
Power Plane Enable
Rev
-3
Date: Wednesday, February 27, 2008
Sheet 37 of 46

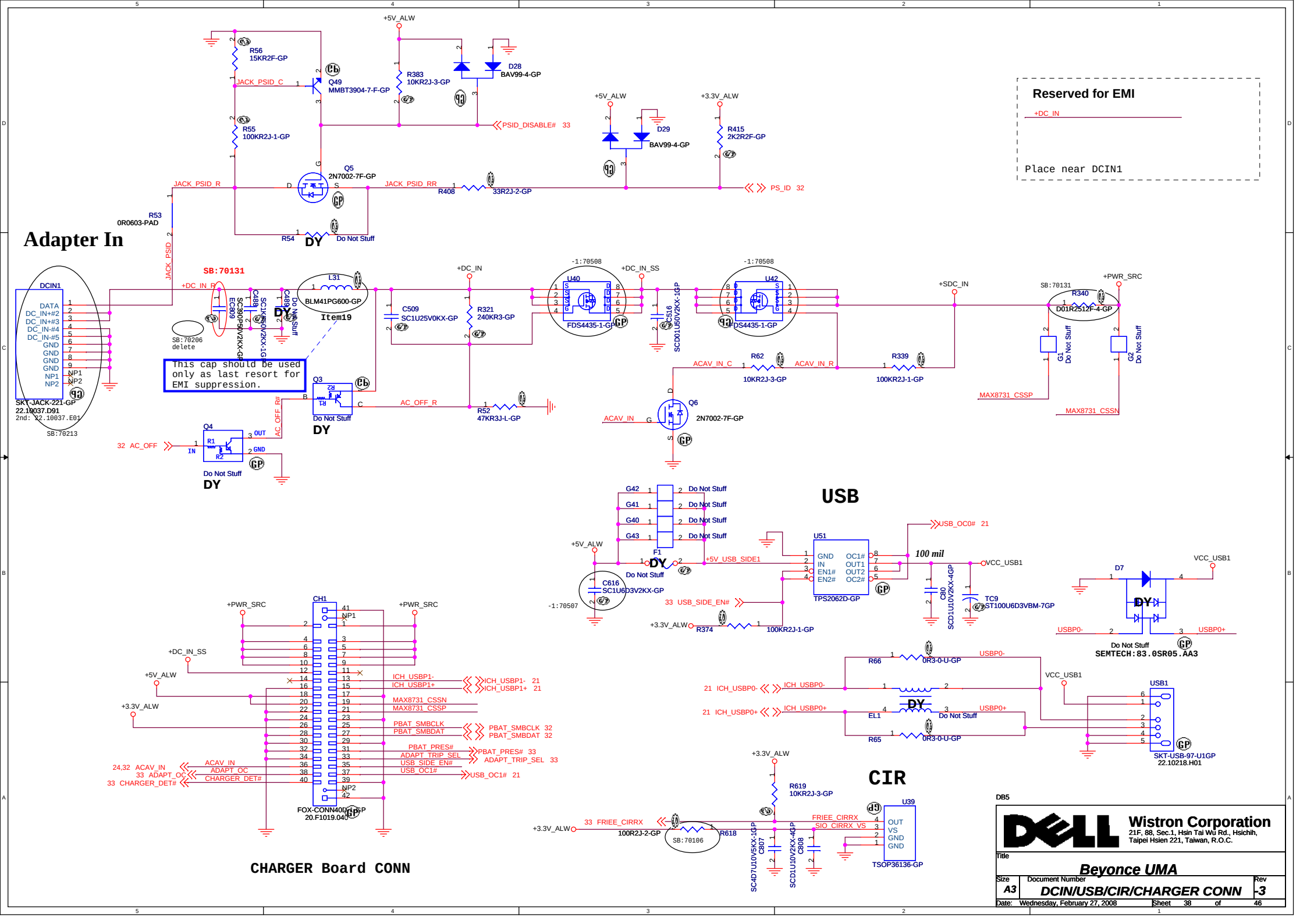
Adapter In
Reserved for EMI
+DC_IN
Place near DCIN1
DCIN1
SKT-JACK-221-GP
22.10037.D91
2nd: 22.10037.E01
SB:70213
SB:70131
SB:70206
delete
This cap should be used only as last resort for EMI suppression.
Item19
BLM41PG600-GP
L31
R56
15KR2F-GP
R55
100KR2J-1-GP
Q49
MMBT3904-7-F-GP
Q5
2N7002-7F-GP
R53
0R0603-PAD
R54
Do Not Stuff
DY
R383
10KR2J-3-GP
D28
BAV99-4-GP
D29
BAV99-4-GP
R415
2K2R2F-GP
R408
33R2J-2-GP
PSID_DISABLE# 33
PS_ID 32
JACK_PSID_C
JACK_PSID_R
JACK_PSID_RR
JACK_PSID
+5V_ALW
+3.3V_ALW
+DC_IN_R
+DC_IN
+DC_IN_SS
+SDC_IN
+PWR_SRC
C509
SC1U25V0KX-GP
R321
240KR3-GP
U40
FDS4435-1-GP
U42
FDS4435-1-GP
-1:70508
C516
SCD01U50V2KX-1GP
R340
D01R2512F-4-GP
G1
G2
Do Not Stuff
MAX8731_CSSP
MAX8731_CSSN
ACAV_IN_C
ACAV_IN_R
ACAV_IN
R62
10KR2J-3-GP
R339
100KR2J-1-GP
Q6
2N7002-7F-GP
Q3
Do Not Stuff
DY
AC_OFF_R
R52
47KR3J-L-GP
Q4
32 AC_OFF
OUT
GND
IN
USB
G42
G41
G40
G43
Do Not Stuff
F1
+5V_USB_SIDE1
C616
SC1U6D3V2KX-GP
U51
TPS2062D-GP
GND
IN
EN1#
EN2#
OC1#
OUT1
OUT2
OC2#
USB_OC0# 21
100 mil
VCC_USB1
C80
SCD1U10V2KX-4GP
TC9
ST100U6D3VBM-7GP
33 USB_SIDE_EN#
R374
100KR2J-1-GP
D7
SEMTECH:83.0SR05.AA3
USBP0-
USBP0+
R66
0R3-0-U-GP
R65
0R3-0-U-GP
EL1
21 ICH_USBP0-
21 ICH_USBP0+
ICH_USBP0-
ICH_USBP0+
USB1
SKT-USB-97-U1GP
22.10218.H01
CH1
FOX-CONN40D-GP
20.F1019.040
ICH_USBP1-
ICH_USBP1+
ICH_USBP1- 21
ICH_USBP1+ 21
MAX8731_CSSN
MAX8731_CSSP
PBAT_SMBCLK
PBAT_SMBDAT
PBAT_SMBCLK 32
PBAT_SMBDAT 32
PBAT_PRES#
ADAPT_TRIP_SEL
USB_SIDE_EN#
USB_OC1#
PBAT_PRES# 33
ADAPT_TRIP_SEL 33
USB_OC1# 21
24,32 ACAV_IN
33 ADAPT_OC
33 CHARGER_DET#
ACAV_IN
ADAPT_OC
CHARGER_DET#
CHARGER Board CONN
CIR
+3.3V_ALW
R619
10KR2J-3-GP
33 FRIEE_CIRRX
100R2J-2-GP
R618
SB:70106
FRIEE_CIRRX
SIO_CIRRX_VS
U39
TSOP36136-GP
OUT
VS
GND
GND
SC4D7U10V5KX-1GP
C807
SCD1U10V2KX-4GP
C808
DB5
Wistron Corporation
21F, 88, Sec.1, Hsin Tai Wu Rd., Hsichih,
Taipei Hsien 221, Taiwan, R.O.C.
Title
Beyonce UMA
Size
A3
Document Number
DCIN/USB/CIR/CHARGER CONN
Rev
-3
Date: Wednesday, February 27, 2008
Sheet 38 of 46

Thermal Design = 35.2A
Peak Current [Ipeak]= 44A
OCP design = 1.2 * Ipeak

I/P cap: 10U 25V K1206 X5R/ 78.10622.52L
Inductor: 0.45UH ETQP4LR45XFC/ 68.R4510.10A
O/P cap: 330U 2V EEFSX0D331XE/ 79.33719.20L
H/S: SI7392DP/ POWERPAK-8/ 16.5mOhm/ 4.5Vgs/ 84.07392.A37
L/S: SI7336ADP/ POWERPAK-8/ 4mOhm/ 4.5Vgs/ 84.07336.B37

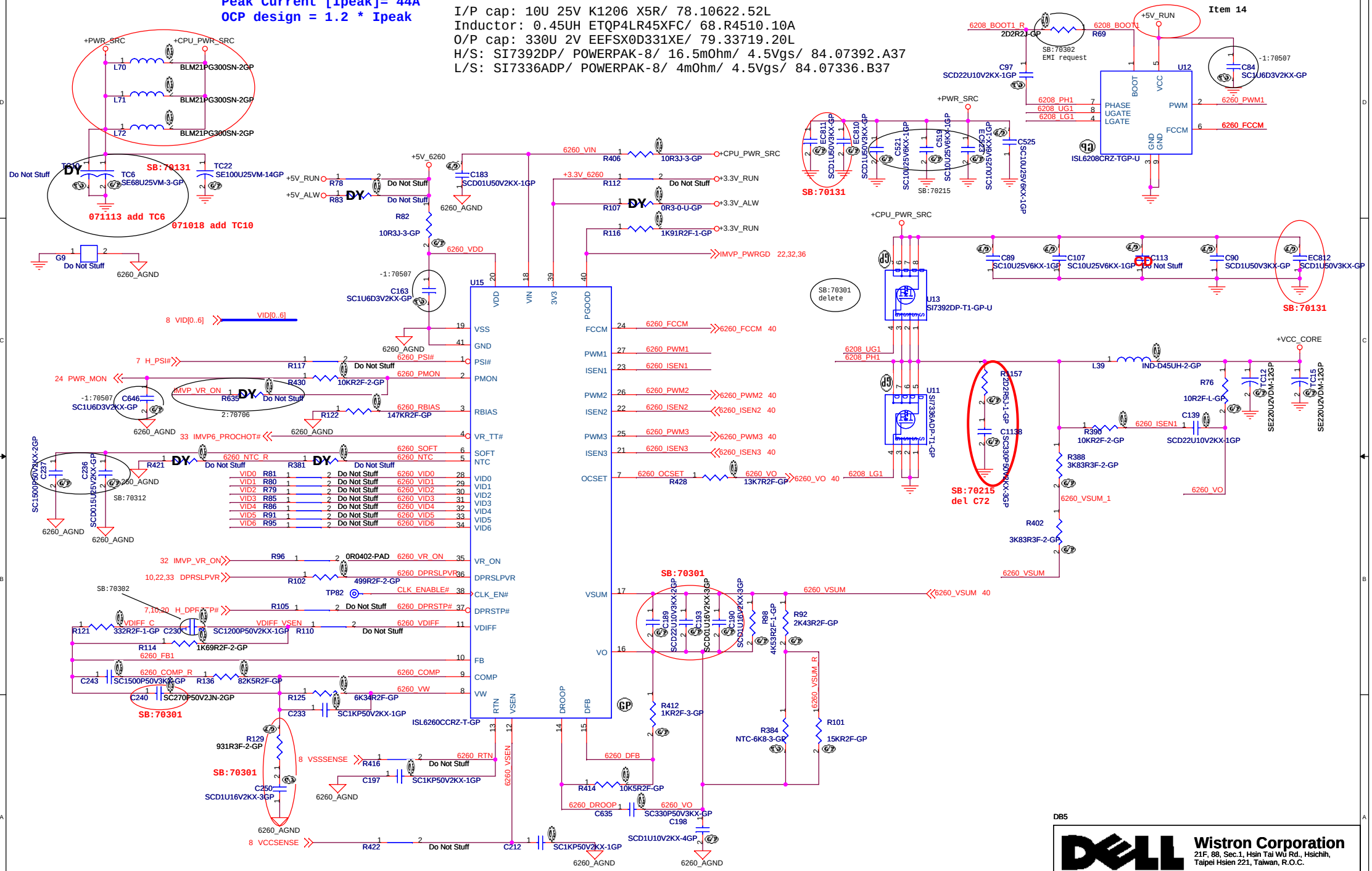

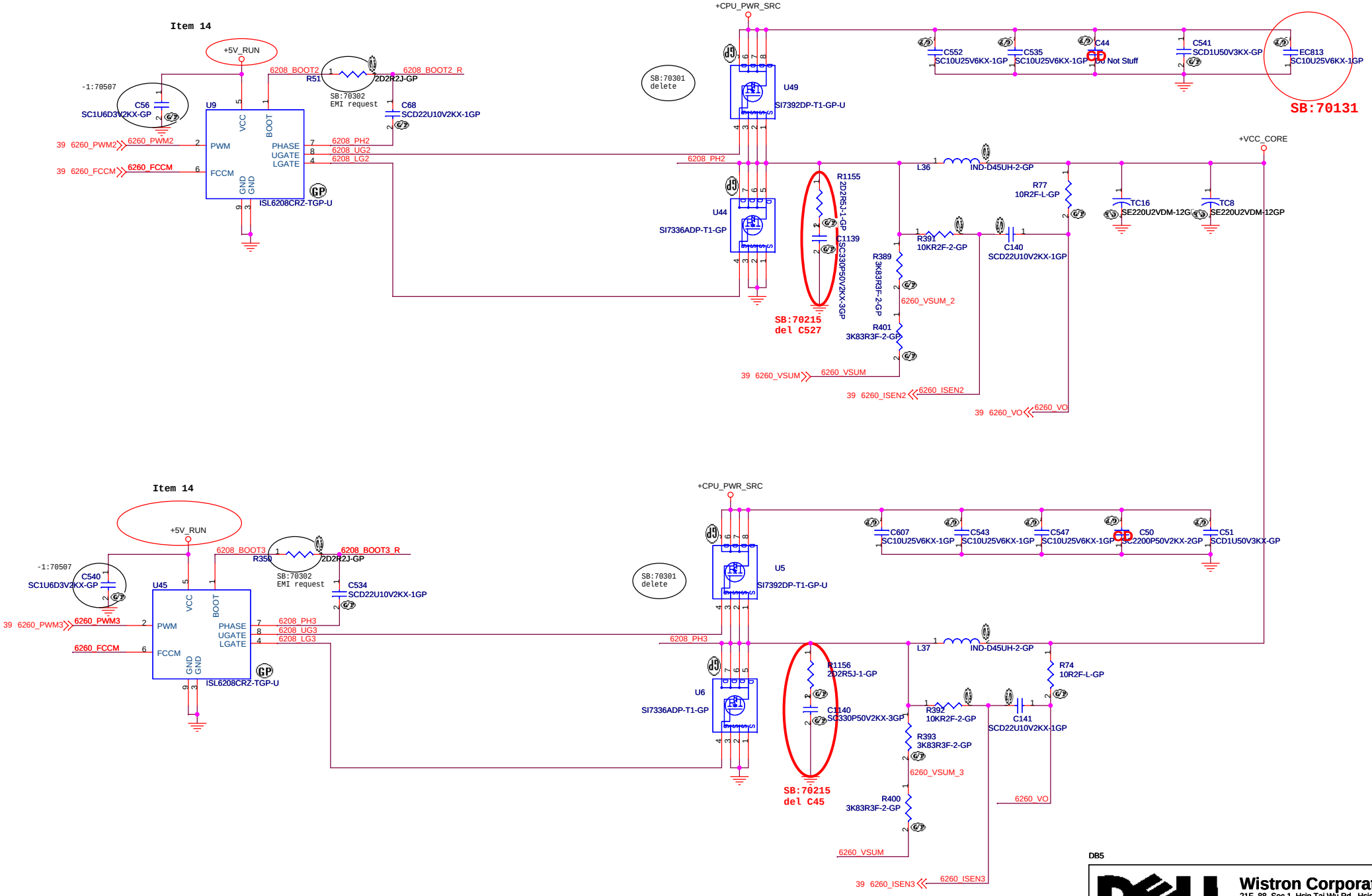

DB5

Wistron Corporation
21F, 88, Sec.1, Hsin Tai Wu Rd., Hsichih,
Taipei Hsien 221, Taiwan, R.O.C.

Title: ***Beyonce UMA***

Size	Document Number	Rev
A3	CPU Core-02	-3

Date: Wednesday, February 27, 2008 Sheet 40 of 46

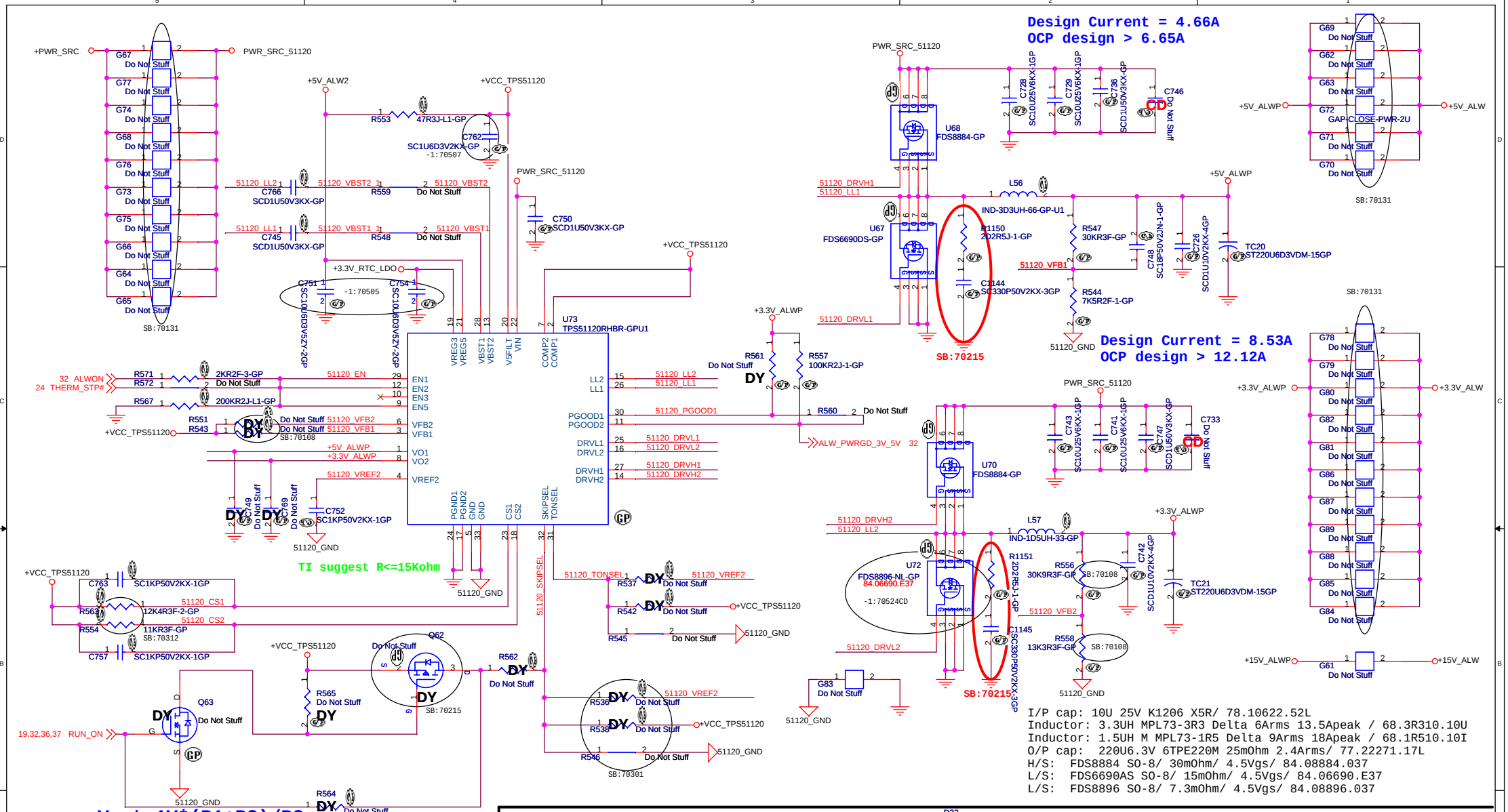

	GND	VREF2	FLOAT	VSFILT
SKIPSEL	**AUTOSKIP**	AUTOSKIP /FAULTS OFF	PWM	PWM
COMP	N/A	N/A	CURRENT MODE	**D-Cap MODE**
TONSEL	380k/CH1 580k/CH2	**280k/CH1 430k/CH2**	220k/CH1 330k/CH2	180k/CH1 2870k/CH2
VFB1	N/A	not use	ADJ.	**5V Fixed Output**
VFB2	N/A	not use	ADJ.	**3.3V Fixed Output**
EN1,EN2	Switcher OFF	not use	Swithchr ON	**Switcher ON**
EN3,EN5	LDO OFF	not use	**LDO ON**	VREG3 ON

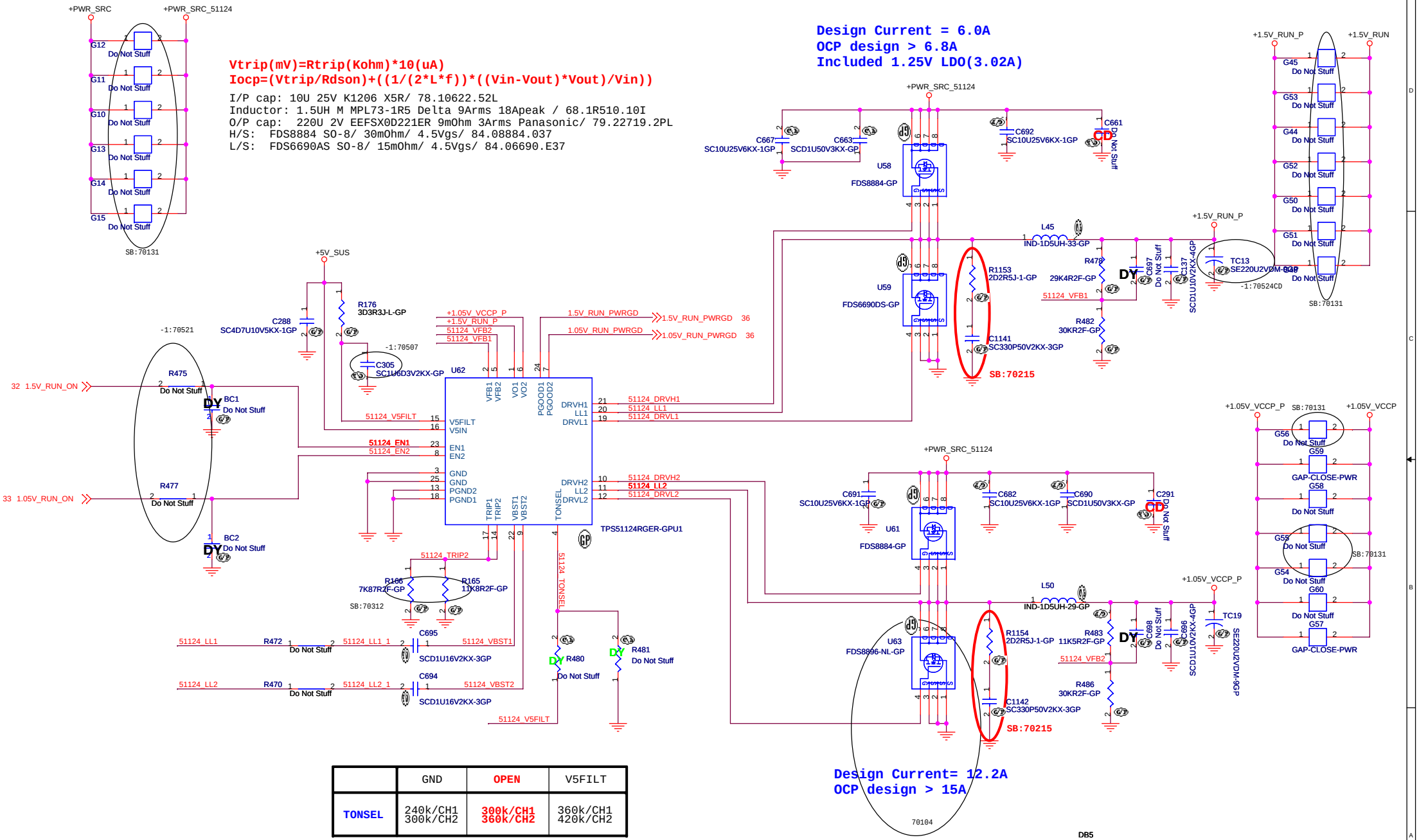

	GND	OPEN	V5FILT
TONSEL	240k/CH1 300k/CH2	300k/CH1 360k/CH2	360k/CH1 420k/CH2

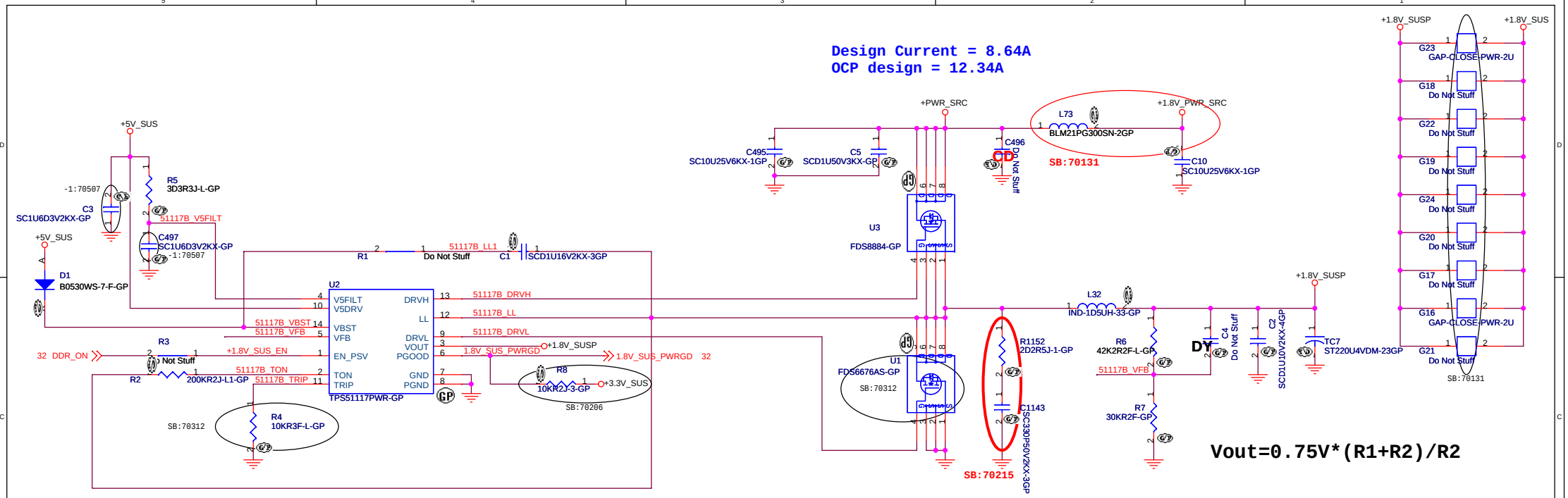

Vout=0.75V*(R1+R2)/R2

I/P cap: 10U 25V K1206 X5R/ 78.10622.52L
Inductor: 1.5UH M MPL73-1R5 Delta 9Arms 18Apeak / 68.1R510.10I
O/P cap: 220U 4V 4TPE220MF 15mOhm 3.1Arms/ 77.22271.161
H/S & L/S: FDS8884 SO-8/ 30mOhm/ 4.5Vgs/ 84.08884.037
L/S: FDS8896 SO-8/ 7.3mOhm/ 4.5Vgs/ 84.08896.037
Ton = 200KOhm --> 330KHz

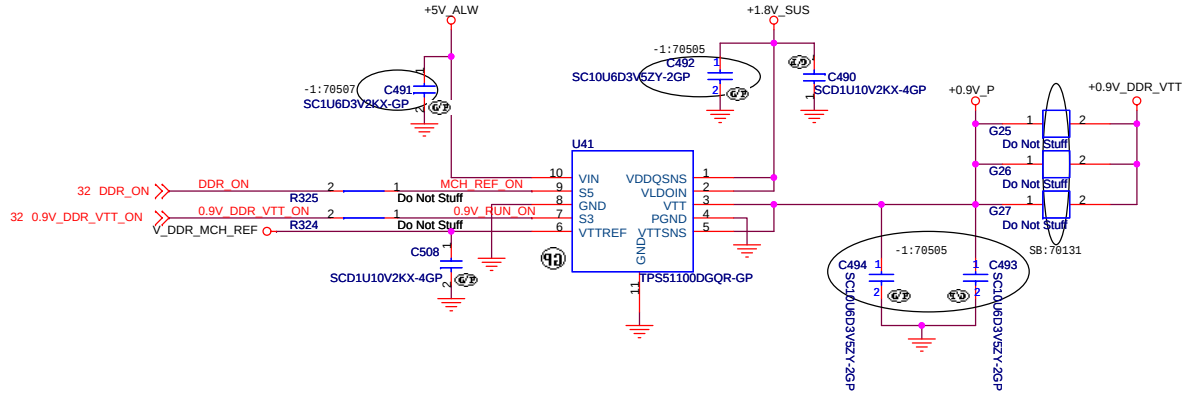

DB5

Wistron Corporation
21F, 88, Sec.1, Hsin Tai Wu Rd., Hsichih,
Taipei Hsien 221, Taiwan, R.O.C.

Title: *Beyonce UMA*

Size: A3 | Document Number: *DCDC 1.8V/0.9V* | Rev: -3

Date: Wednesday, February 27, 2008 | Sheet 43 of 46

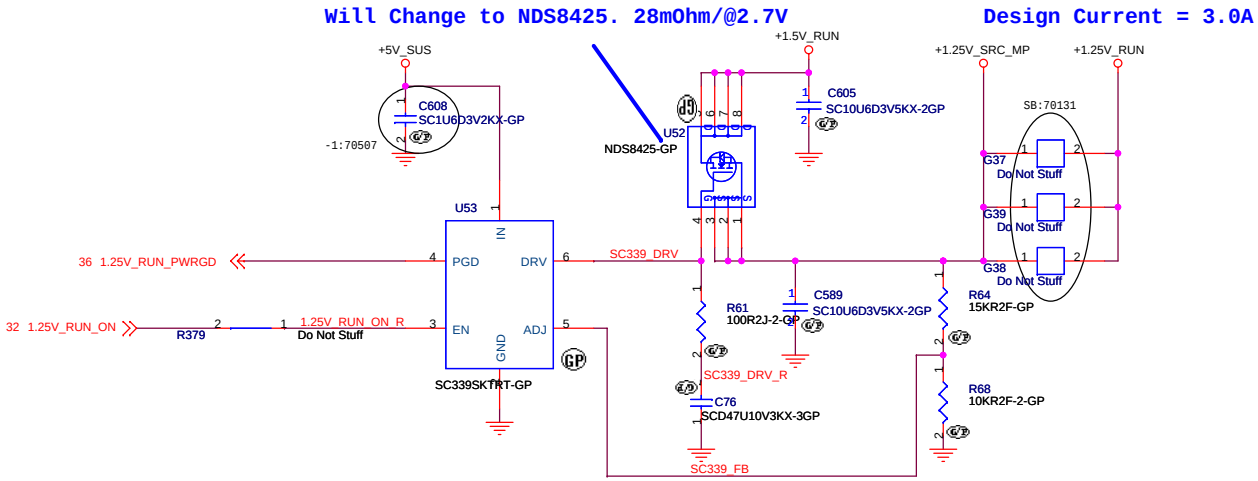

DB5

Wistron Corporation
21F, 88, Sec.1, Hsin Tai Wu Rd., Hsichih,
Taipei Hsien 221, Taiwan, R.O.C.

Title: *Beyonce UMA*

Size	Document Number	Rev
A3	DCDC 1.25V	-3

Date: Wednesday, February 27, 2008 Sheet 44 of 46

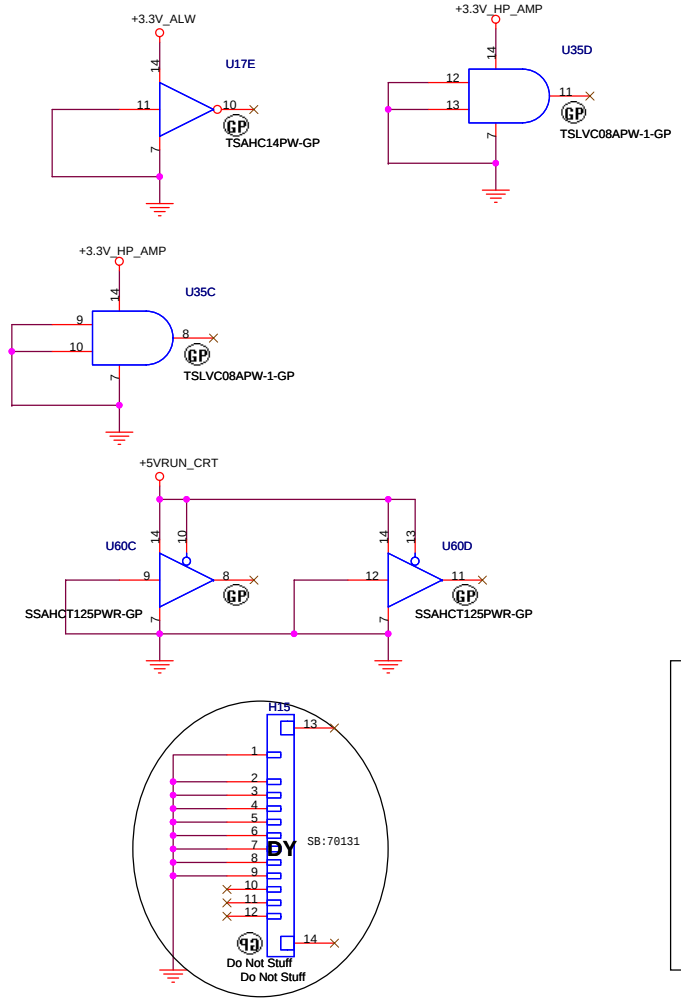

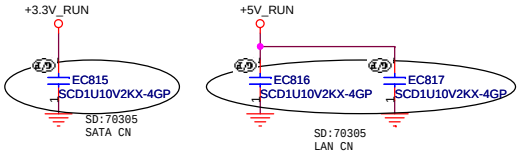

SW3 - 34.43E25.001
SW9 - 34.49Q02.001
SW5 - 34.34T31.001 (Only for UMA)
others-34.45T31.001

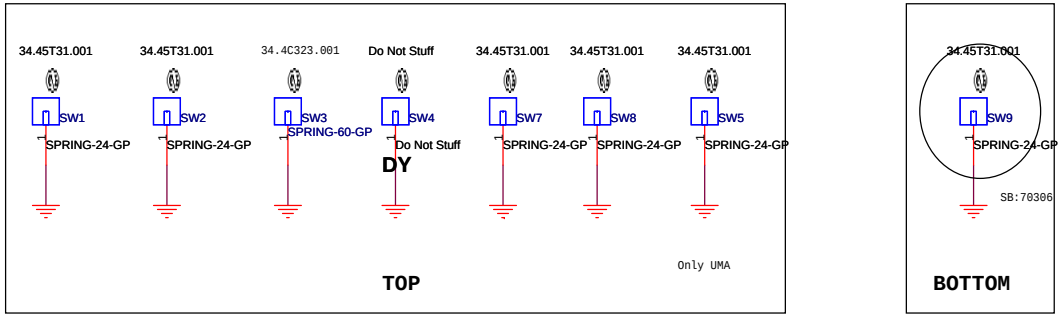

H12, H16: 34.45X06.001
H8: 34.4A908.001
H27: 34.47M04.001
H26: 34.4G901.001
H21: 34.4C401.001

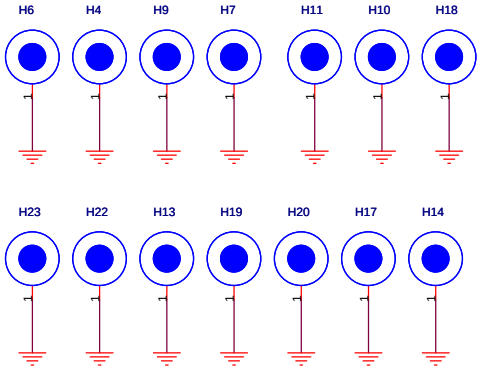

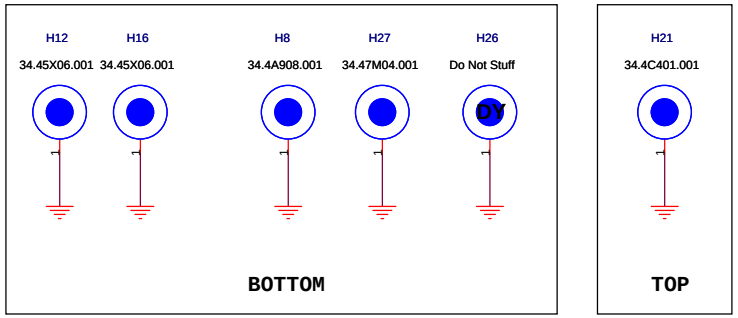

DB5

Wistron Corporation
21F, 88, Sec.1, Hsin Tai Wu Rd., Hsichih,
Taipei Hsien 221, Taiwan, R.O.C.

Title: ***Beyonce UMA***

Size	Document Number	Rev
A3	EMI&MISC	-3

Date: Wednesday, February 27, 2008 Sheet 45 of 46

DATE	VERSON	ITEM	PAGE	Modify List	Issue Description	OWNER
2006/11/24		1				EE
		2				EE
		3				EE
		4				EE
		5				EE
		6				EE
		7				EE
		8				EE
		9				EE
		10				EE
		11				EE
		12				EE
		13				EE
		14				EE
		15				EE
		16				Power team
		17				EE
		18				EE
		19				EE
		20				EE
		22				
		23				
		24				
		25				
		26				

DB5

Wistron Corporation
21F, 88, Sec.1, Hsin Tai Wu Rd., Hsichih,
Taipei Hsien 221, Taiwan, R.O.C.

Title: Beyonce UMA

Size: A3 | Document Number: HISTORY | Rev: -3

Date: Wednesday, February 27, 2008 | Sheet 46 of 46