Sputnik Block Diagram

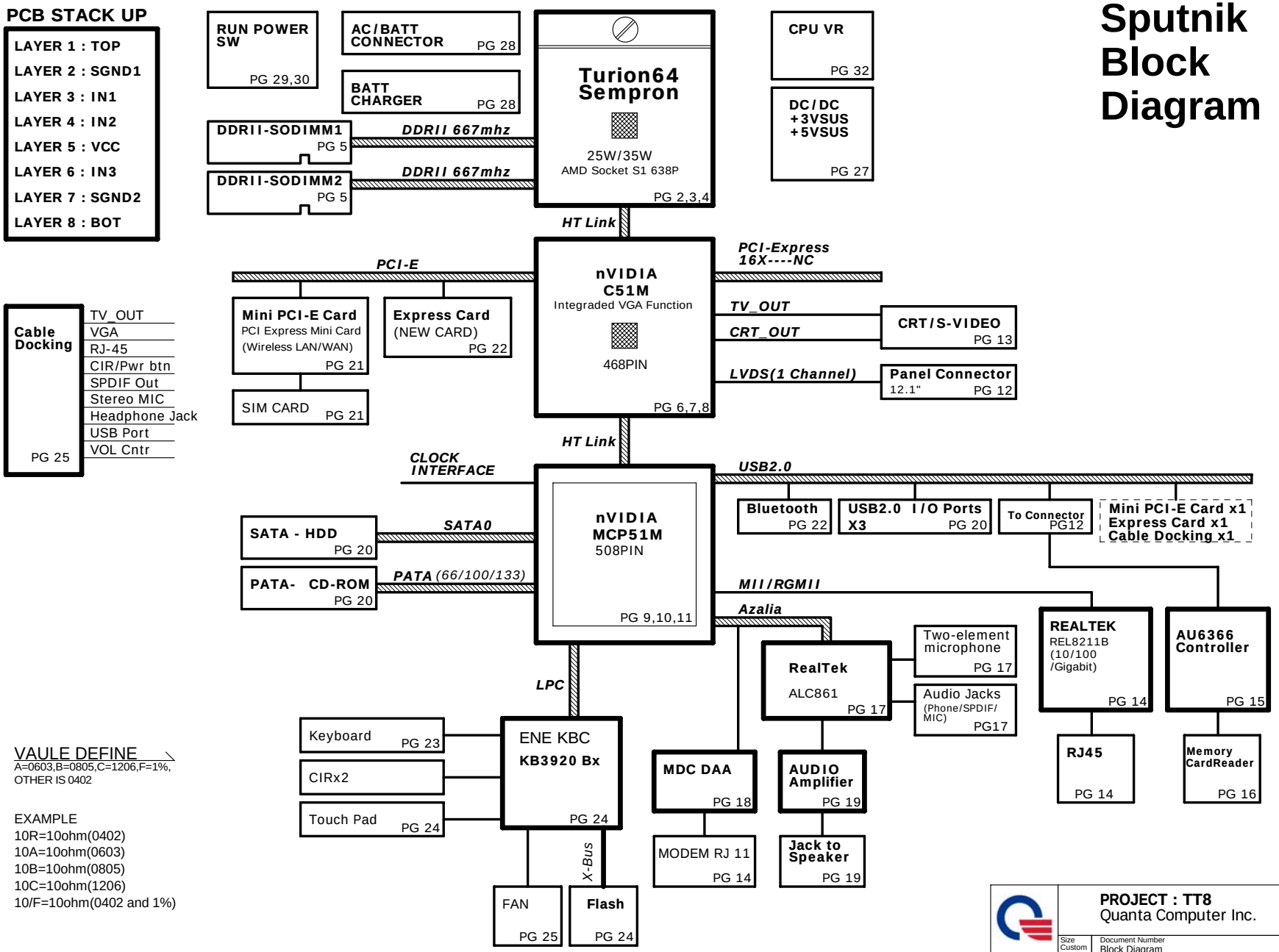

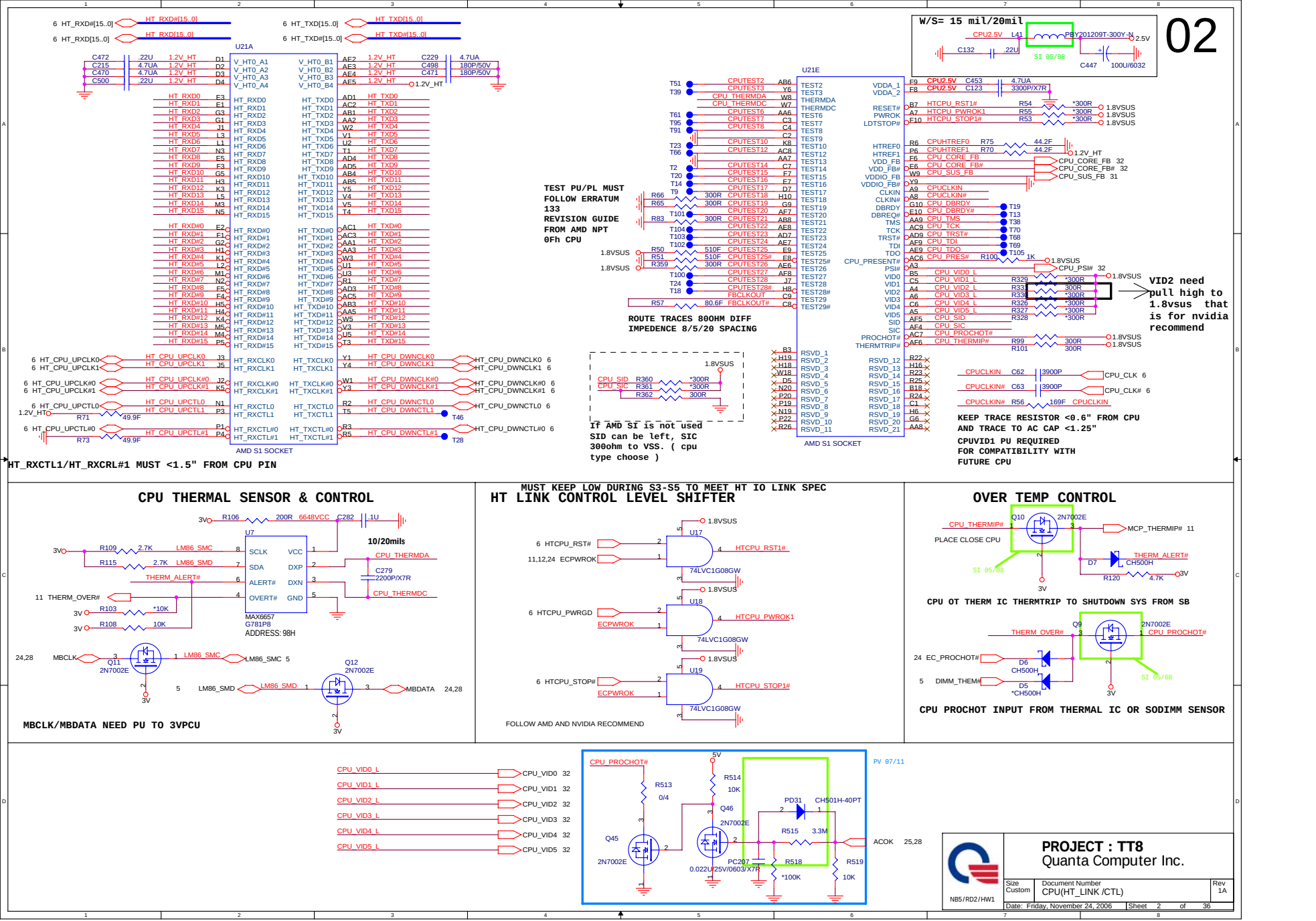
02
W/S= 15 mil/20mil
U21A
AMD S1 SOCKET
U21E
AMD S1 SOCKET
TEST PU/PL MUST FOLLOW ERRATUM 133 REVISION GUIDE FROM AMD NPT 0Fh CPU
ROUTE TRACES 80OHM DIFF IMPEDENCE 8/5/20 SPACING
VID2 need pull high to 1.8vsus that is for nvidia recommend
If AMD SI is not used SID can be left, SIC 300ohm to VSS. (cpu type choose)
KEEP TRACE RESISTOR <0.6" FROM CPU AND TRACE TO AC CAP <1.25"
CPUVID1 PU REQUIRED FOR COMPATIBILITY WITH FUTURE CPU
HT_RXCTL1/HT_RXCRL#1 MUST <1.5" FROM CPU PIN
CPU THERMAL SENSOR & CONTROL
MAX6657 G781P8 ADDRESS: 98H
10/20mils
MBCLK/MBDATA NEED PU TO 3VPCU
MUST KEEP LOW DURING S3-S5 TO MEET HT IO LINK SPEC
HT LINK CONTROL LEVEL SHIFTER
FOLLOW AMD AND NVIDIA RECOMMEND
OVER TEMP CONTROL
PLACE CLOSE CPU
CPU OT THERM IC THERMTRIP TO SHUTDOWN SYS FROM SB
CPU PROCHOT INPUT FROM THERMAL IC OR SODIMM SENSOR
PV 07/11
PROJECT : TT8
Quanta Computer Inc.
Size Custom
Document Number CPU(HT_LINK /CTL)
Rev 1A
Date: Friday, November 24, 2006
Sheet 2 of 36
NB5/RD2/HW1

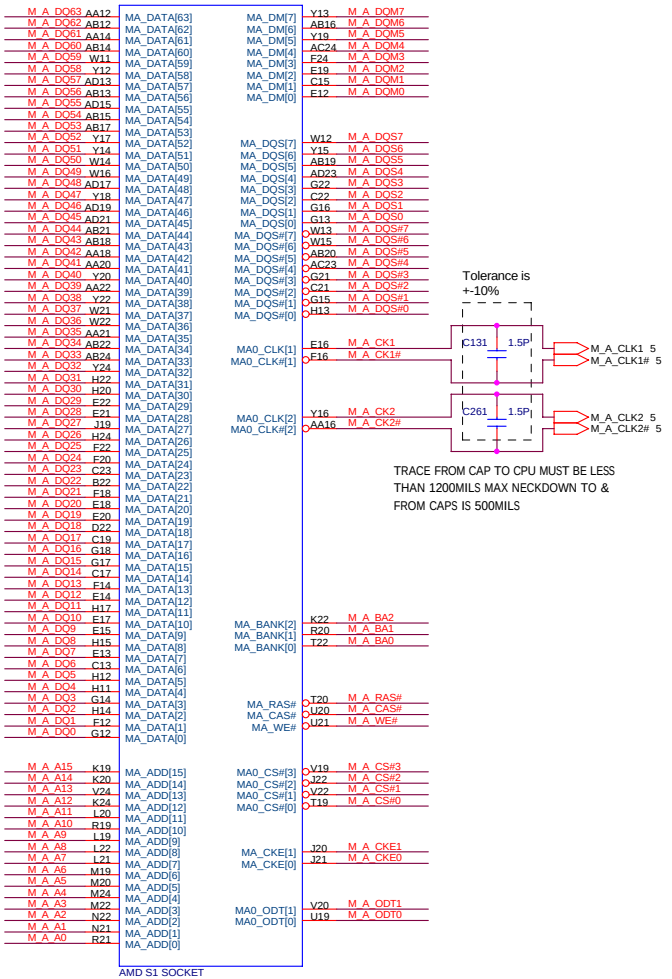

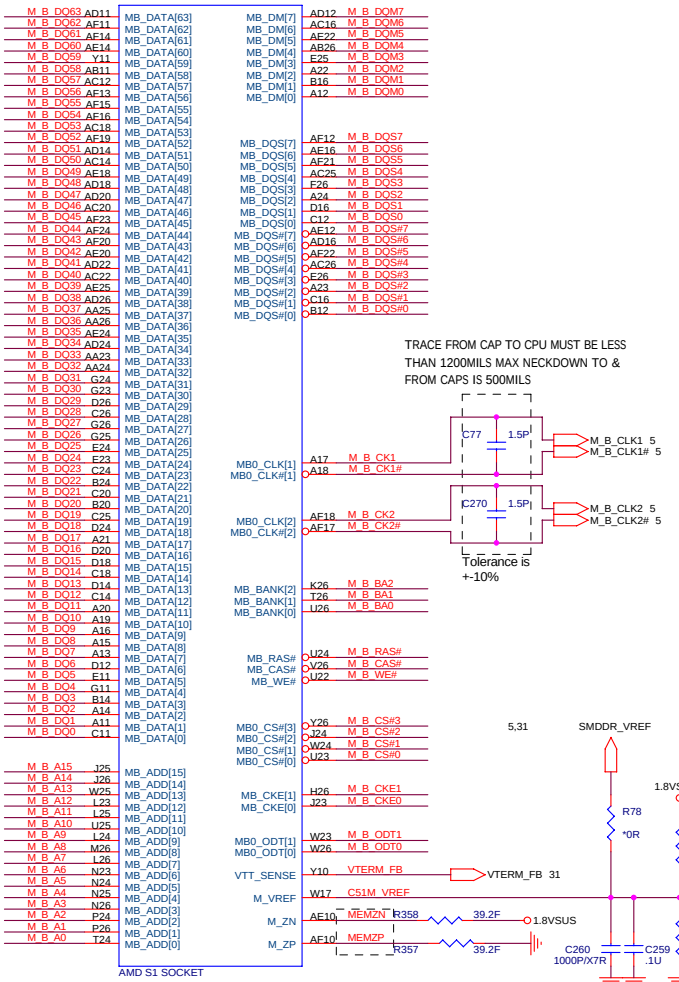

C51MVREF : W =20MIL AND SPACE = 20MIL

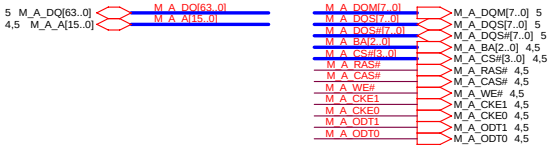

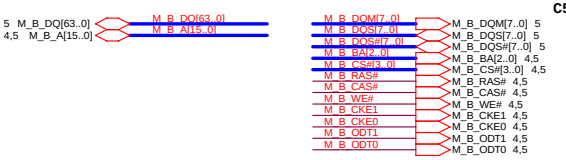

PROJECT : TT8
Quanta Computer Inc.

NB5/RD2/HW1

Size	Document Number	Rev
Custom	CPU(MEM/IF)	1A

Date: Friday, November 24, 2006 | Sheet 3 of 36

CPU POWER PLANE AND BY PASS CAP

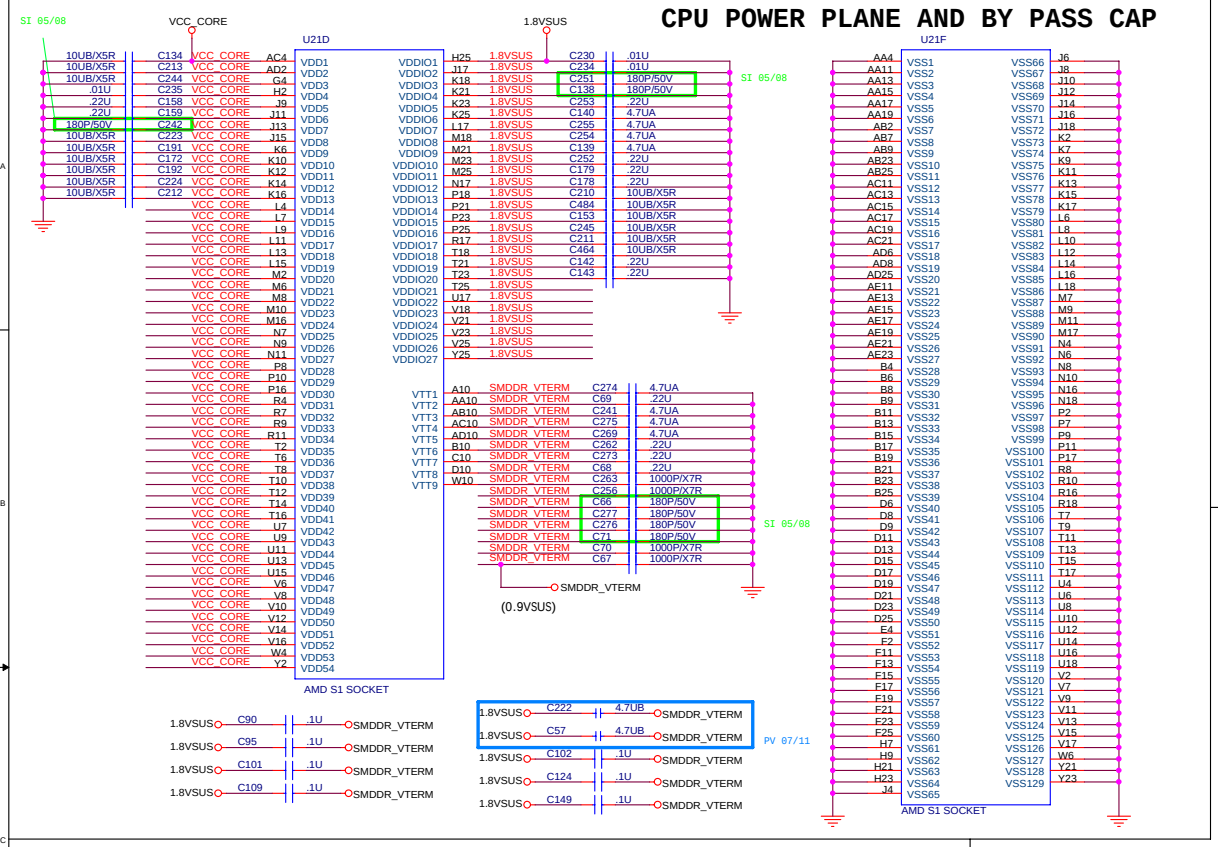

DDR2 TERMINATION BYPASS CAP

04

CHANNEL A

CHANNEL B

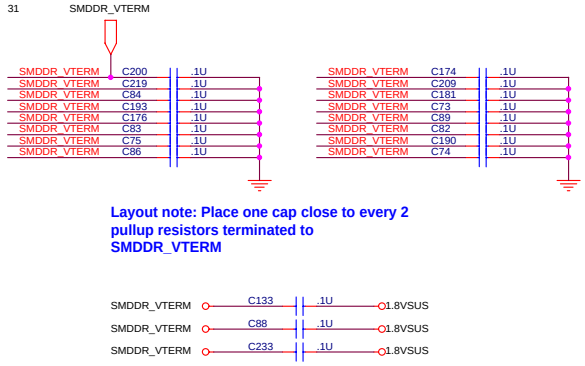

Layout note: Place one cap close to every 2 pullup resistors terminated to SMDDR_VTERM

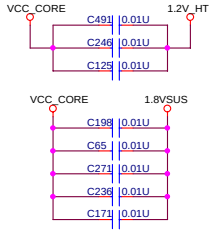

DDRII CHANNEL A TERMINATION

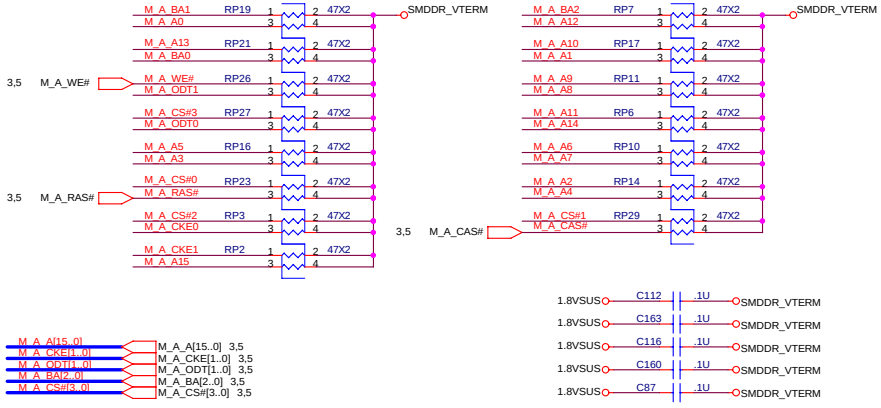

DDRII CHANNEL B TERMINATION

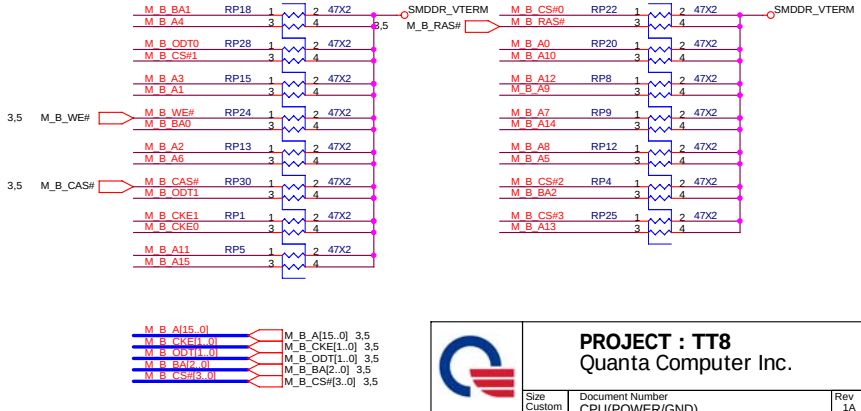

PROJECT : TT8
Quanta Computer Inc.

NB5/RD2/HW1

Size	Document Number	Rev
Custom	CPU(POWER/GND)	1A

Date: Friday, November 24, 2006 Sheet 4 of 36

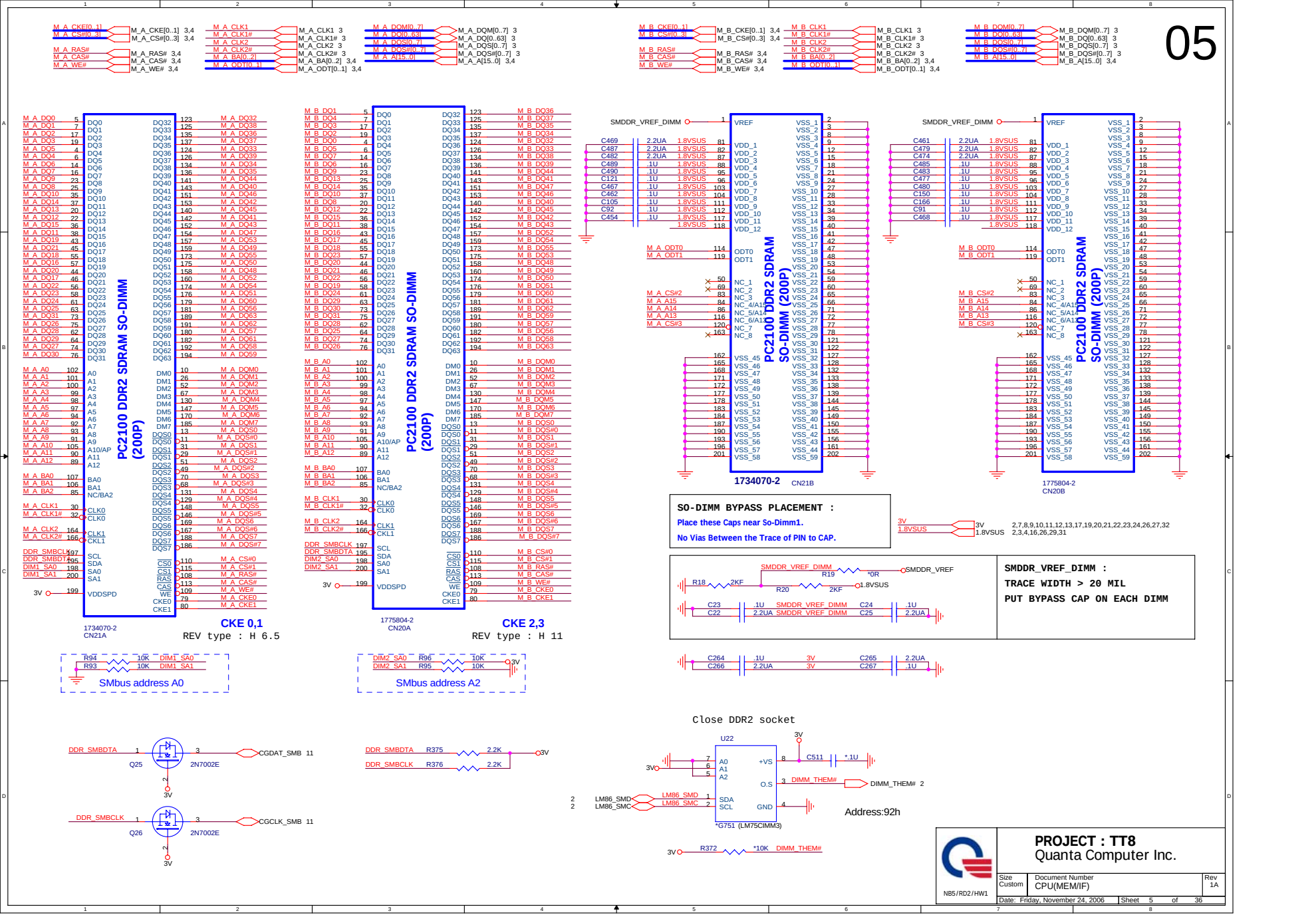
PC2100 DDR2 SDRAM SO-DIMM (200P)
1734070-2
CN21A
CKE 0,1
REV type : H 6.5
PC2100 DDR2 SDRAM SO-DIMM (200P)
1775804-2
CN20A
CKE 2,3
REV type : H 11
SMbus address A0
SMbus address A2
PC2100 DDR2 SDRAM SO-DIMM (200P)
1734070-2
CN21B
PC2100 DDR2 SDRAM SO-DIMM (200P)
1775804-2
CN20B
SO-DIMM BYPASS PLACEMENT :
Place these Caps near So-Dimm1.
No Vias Between the Trace of PIN to CAP.
SMDDR_VREF_DIMM :
TRACE WIDTH > 20 MIL
PUT BYPASS CAP ON EACH DIMM
Close DDR2 socket
Address:92h
PROJECT : TT8
Quanta Computer Inc.
Size Custom
Document Number CPU(MEM/IF)
Rev 1A
Date: Friday, November 24, 2006
Sheet 5 of 36

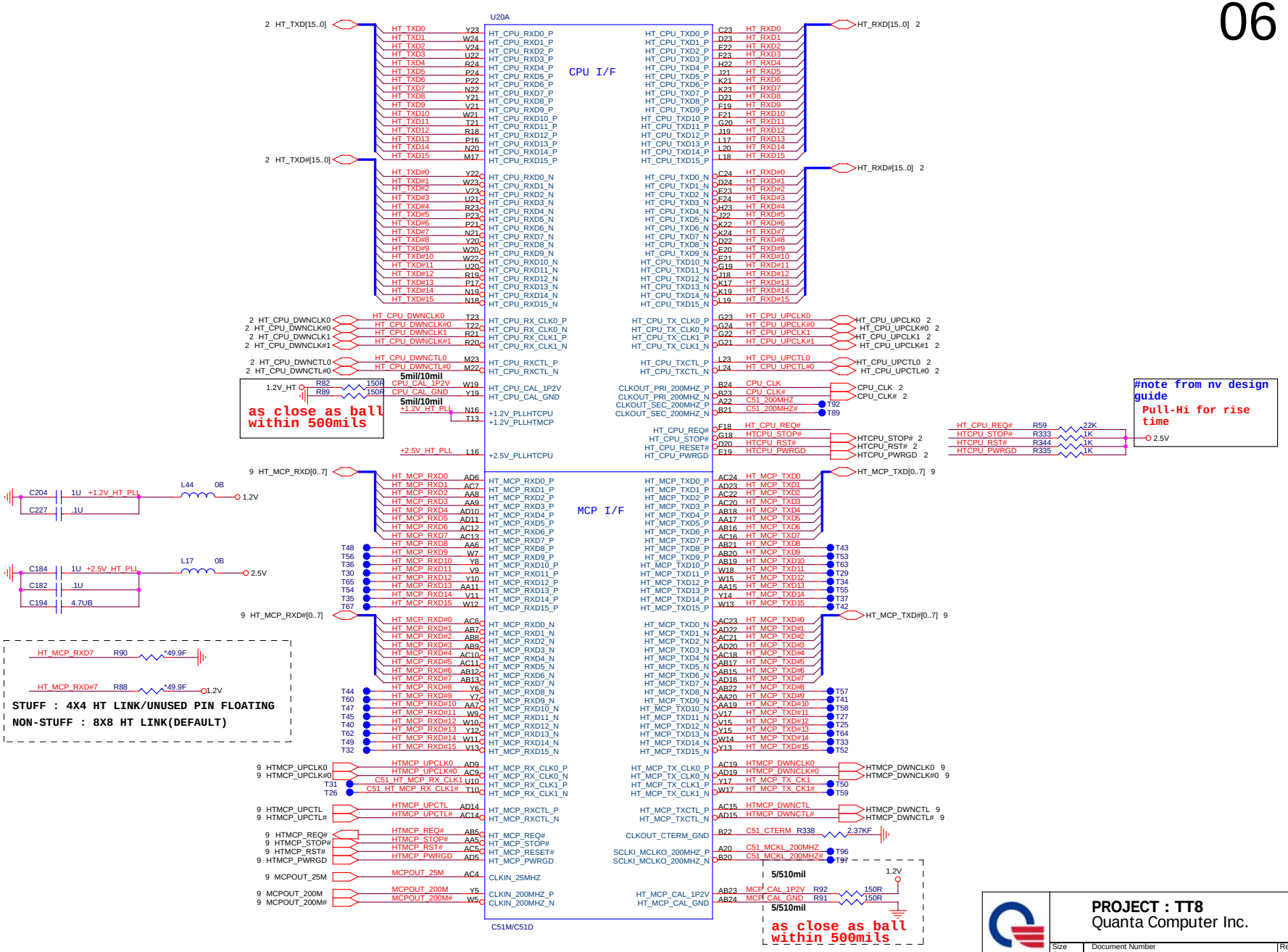

PROJECT : TT8
Quanta Computer Inc.

Size	Document Number	Rev
Custom	C51MV (HT LINK)	1A

NB5/RD2/HW1

Date: Friday, November 24, 2006 | Sheet 6 of 36

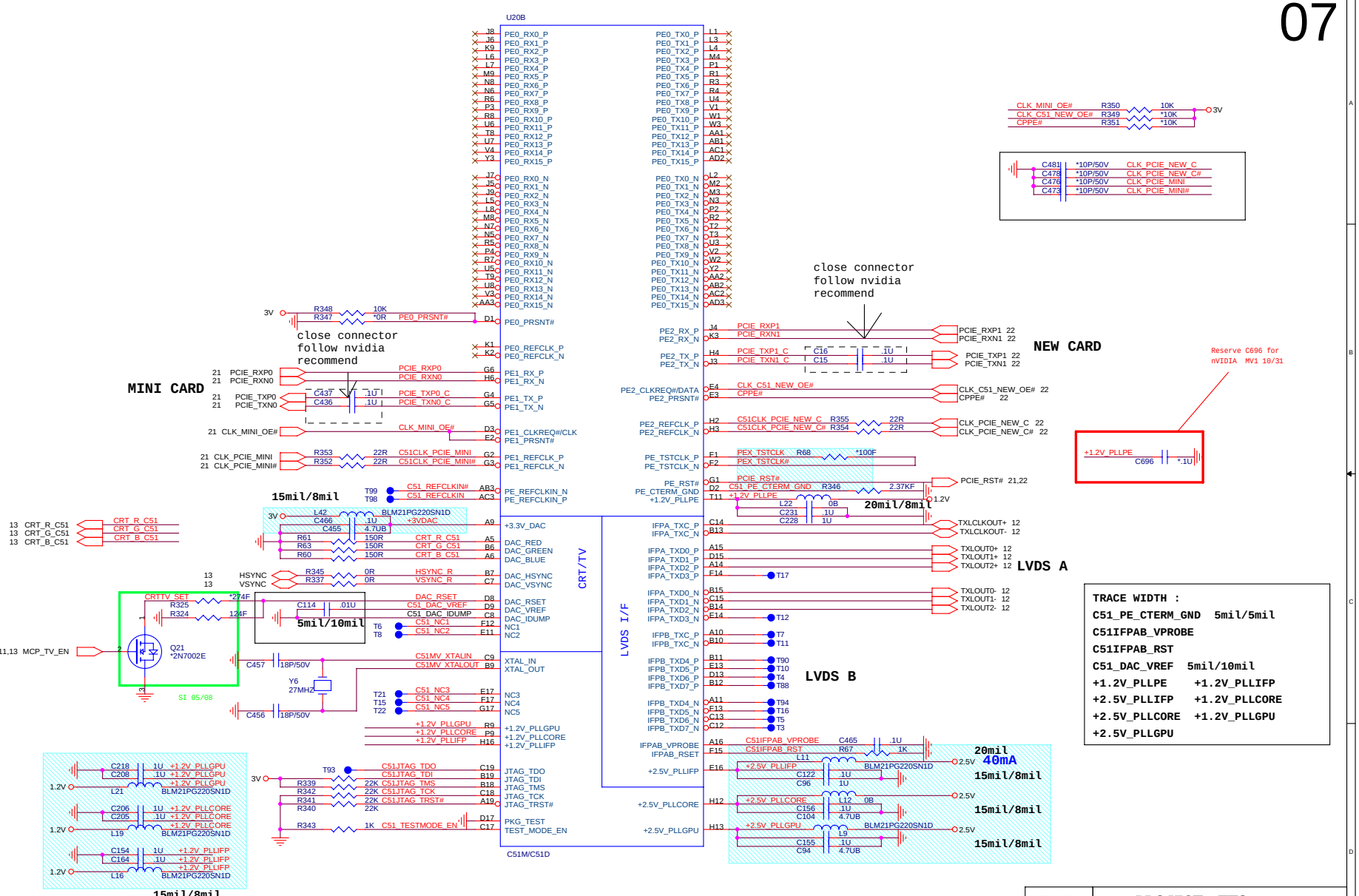

PROJECT : TT8
Quanta Computer Inc.

Size	Document Number	Rev
Custom	C51MV (PCIE/LCD/RGB)	1A

Date: Friday, November 24, 2006 Sheet 7 of 36

NB5/RD2/HW1

C51M POWER PLANE/GND & BYPASS

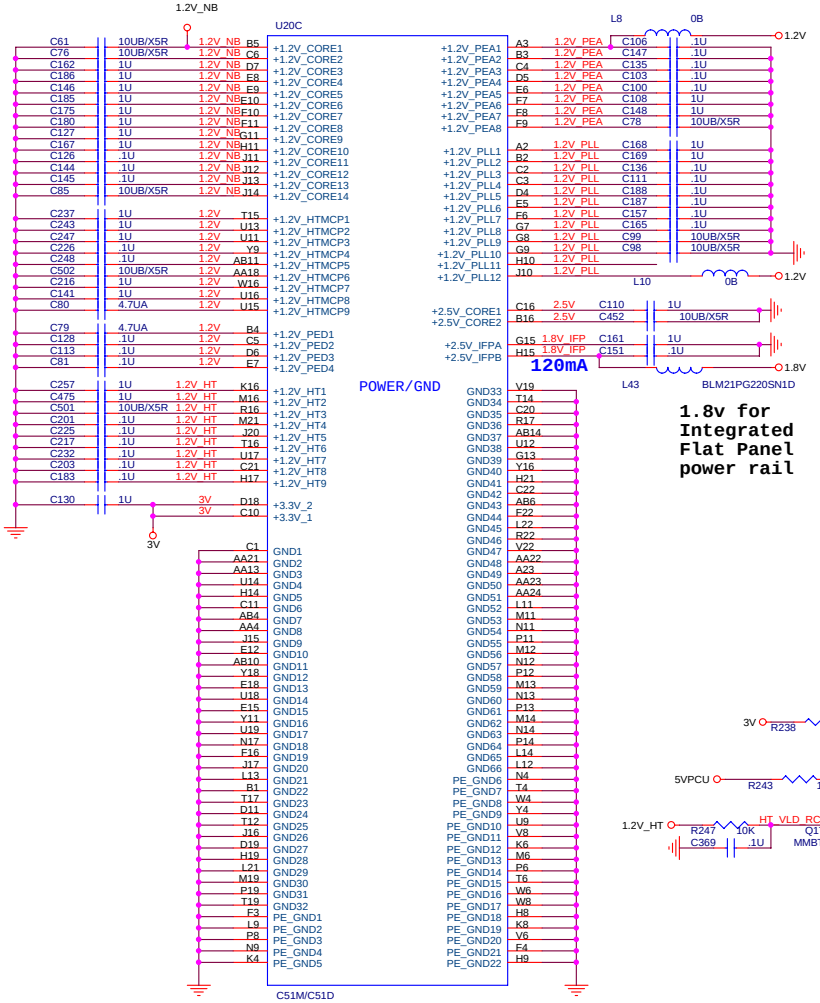

1.8v for Integrated Flat Panel power rail

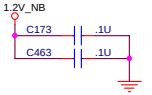

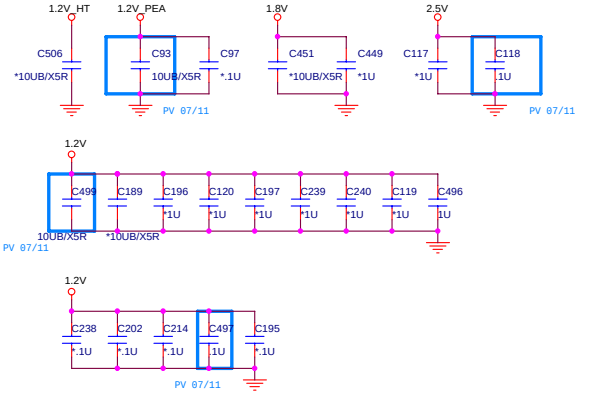

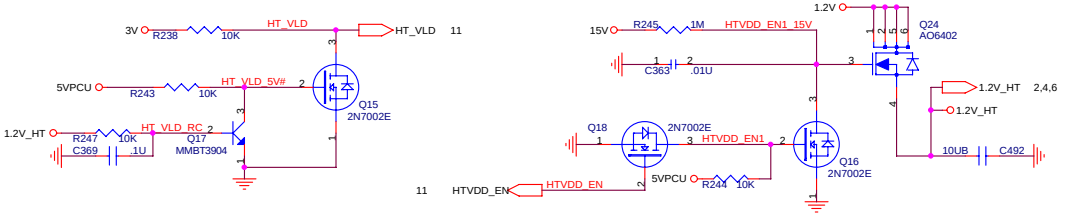

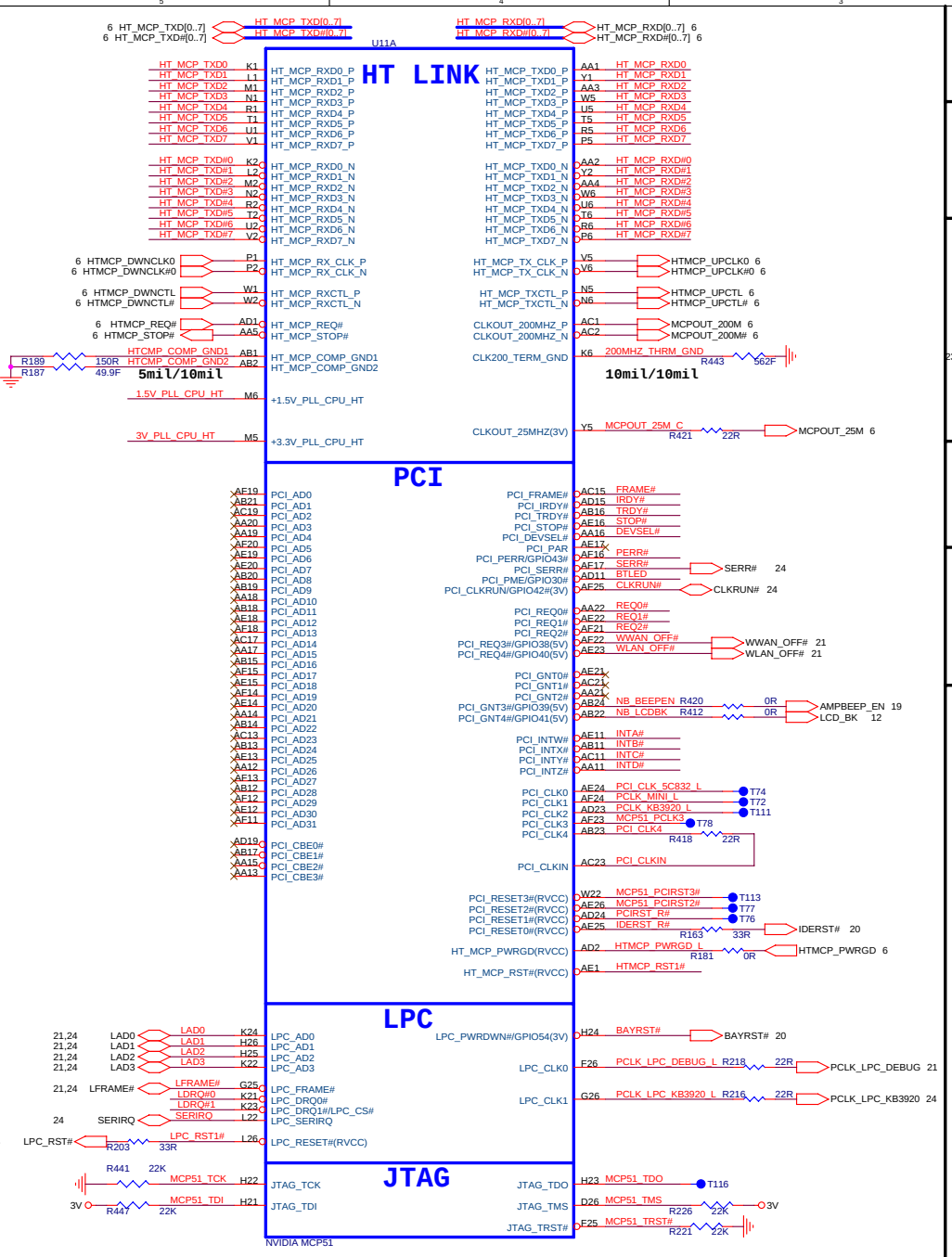

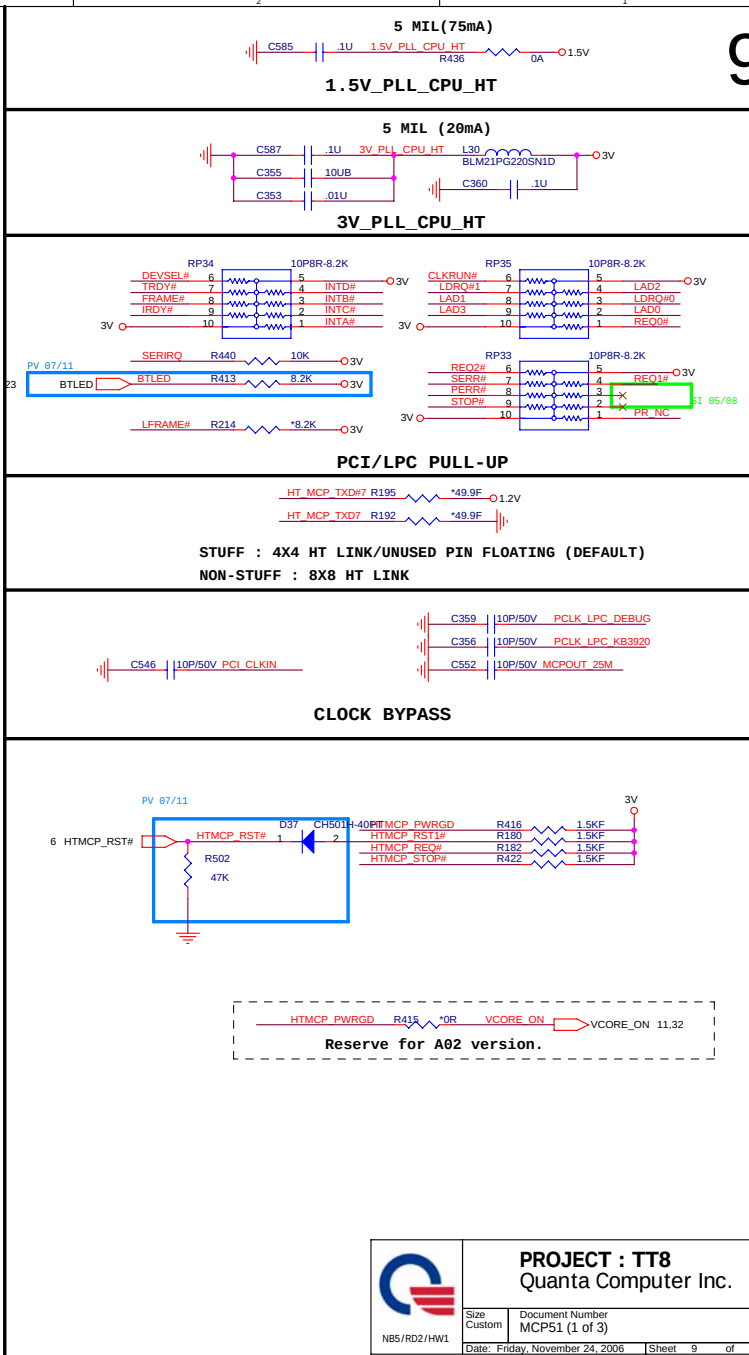

9

PROJECT : TT8
Quanta Computer Inc.

Size	Document Number	Rev
Custom	MCP51 (1 of 3)	1A

NB5/RD2/HW1

Date: Friday, November 24, 2006 | Sheet 9 of 36

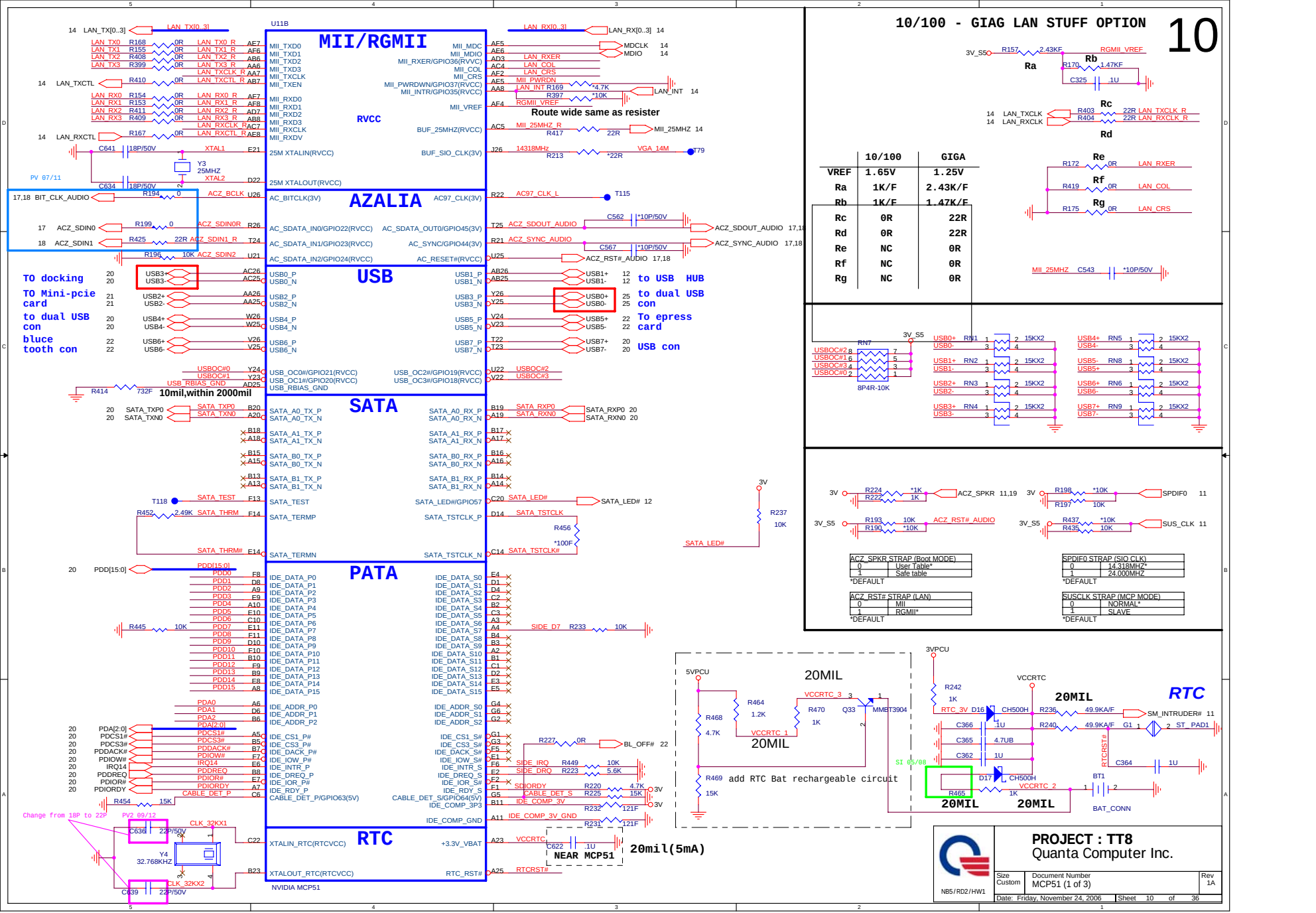
10/100 - GIAG LAN STUFF OPTION
10
MII/RGMII
AZALIA
USB
SATA
PATA
RTC
RVCC
Route wide same as resister
TO docking
TO Mini-pcie card
to dual USB con
bluce tooth con
to USB HUB
to dual USB con
To epress card
USB con
10mil,within 2000mil
20MIL
add RTC Bat rechargeable circuit
20mil(5mA)
NEAR MCP51
NVIDIA MCP51
PROJECT : TT8
Quanta Computer Inc.
Size Custom
Document Number MCP51 (1 of 3)
Rev 1A
Date: Friday, November 24, 2006
Sheet 10 of 36

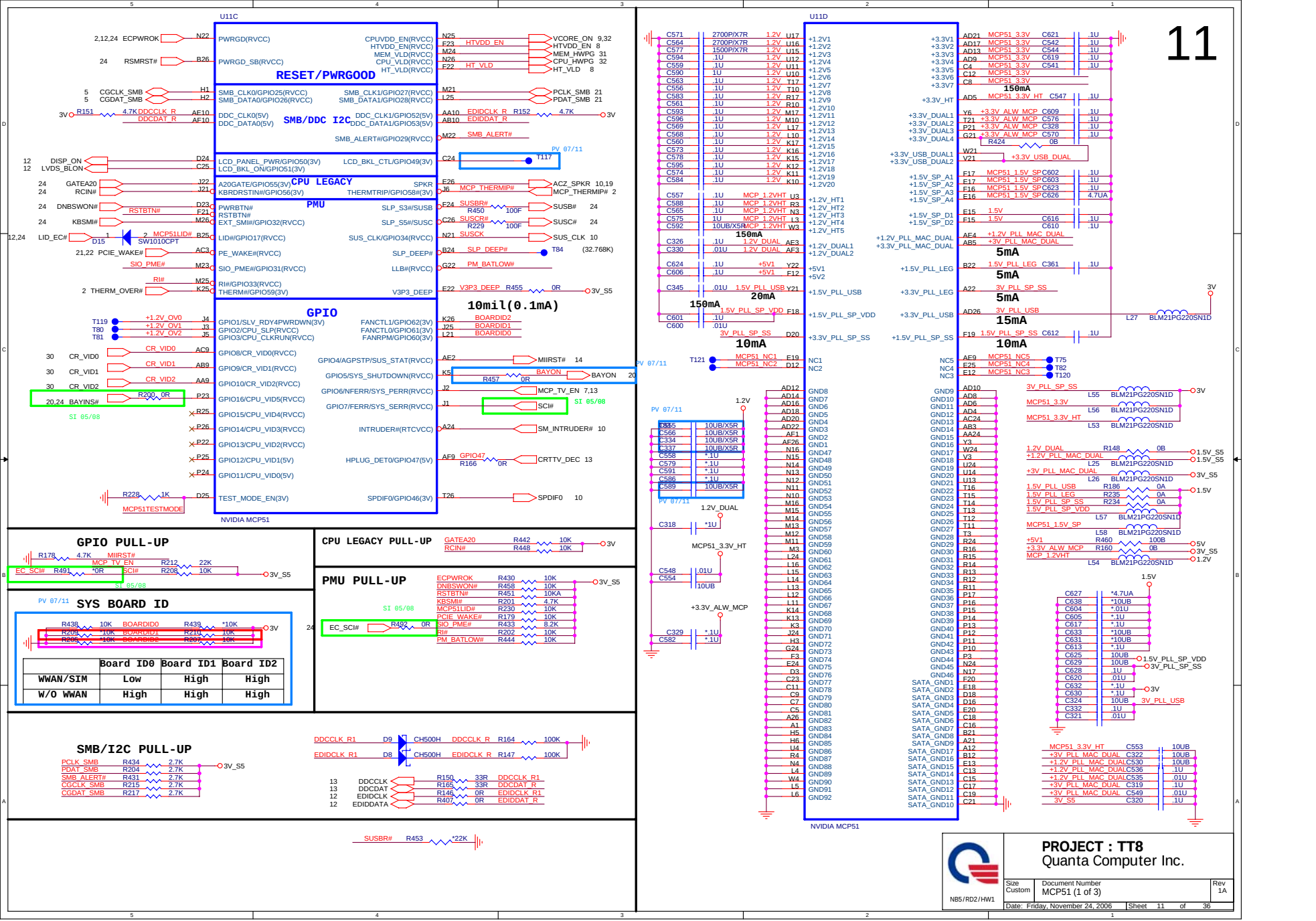
U11C
RESET/PWRGOOD
SMB/DDC I2C
CPU LEGACY
PMU
GPIO
NVIDIA MCP51
U11D
150mA
5mA
15mA
10mA
20mA
10mil(0.1mA)
GPIO PULL-UP
CPU LEGACY PULL-UP
PMU PULL-UP
SYS BOARD ID
SMB/I2C PULL-UP
Board ID0 Board ID1 Board ID2
WWAN/SIM Low High High
W/O WWAN High High High
PROJECT : TT8
Quanta Computer Inc.
Size Custom
Document Number MCP51 (1 of 3)
Rev 1A
Date: Friday, November 24, 2006
Sheet 11 of 36
NB5/RD2/HW1

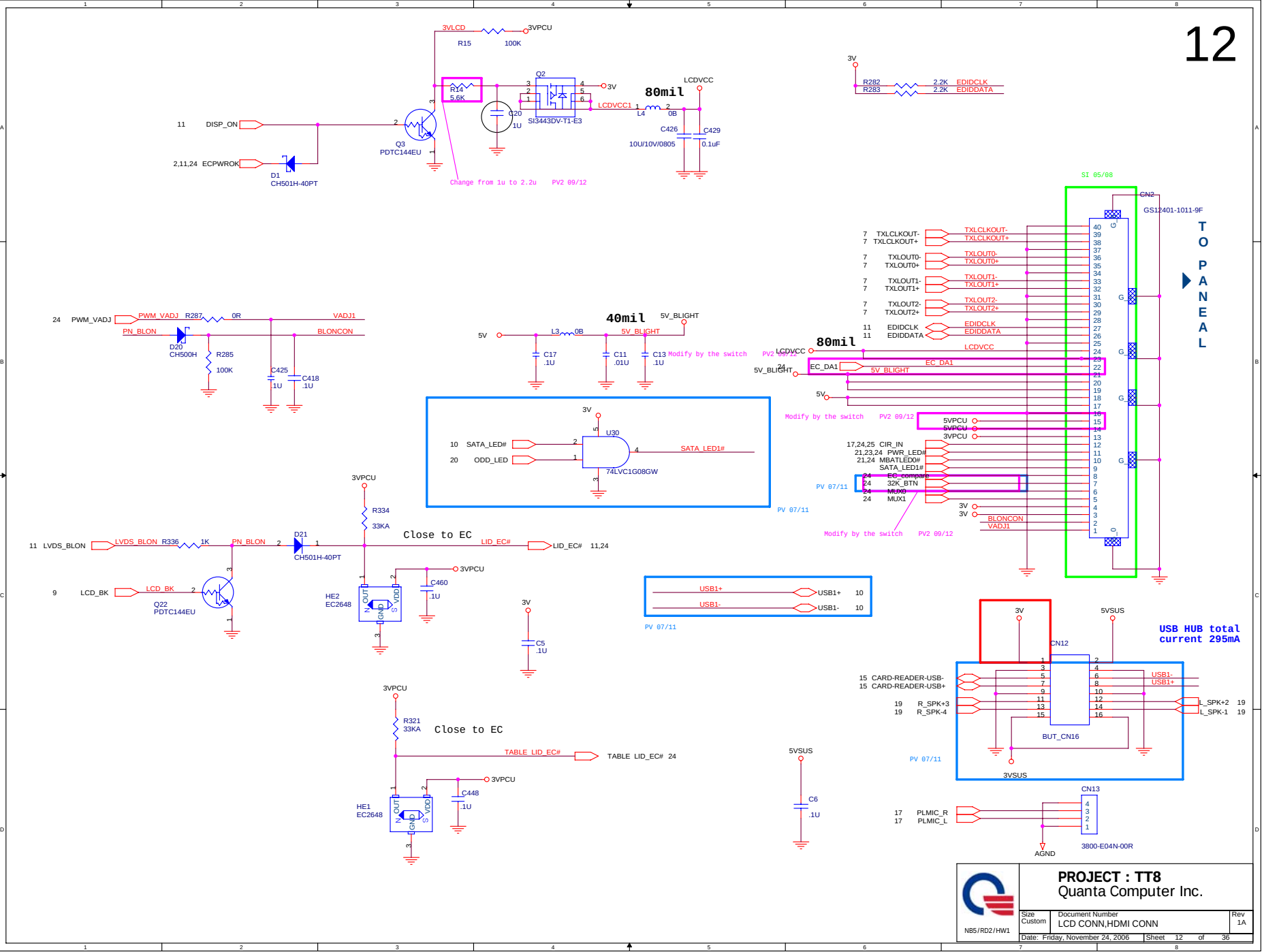

PROJECT : TT8
Quanta Computer Inc.

Size	Document Number	Rev
Custom	LCD CONN,HDMI CONN	1A

Date: Friday, November 24, 2006 | Sheet 12 of 36

N85/RD2/HW1

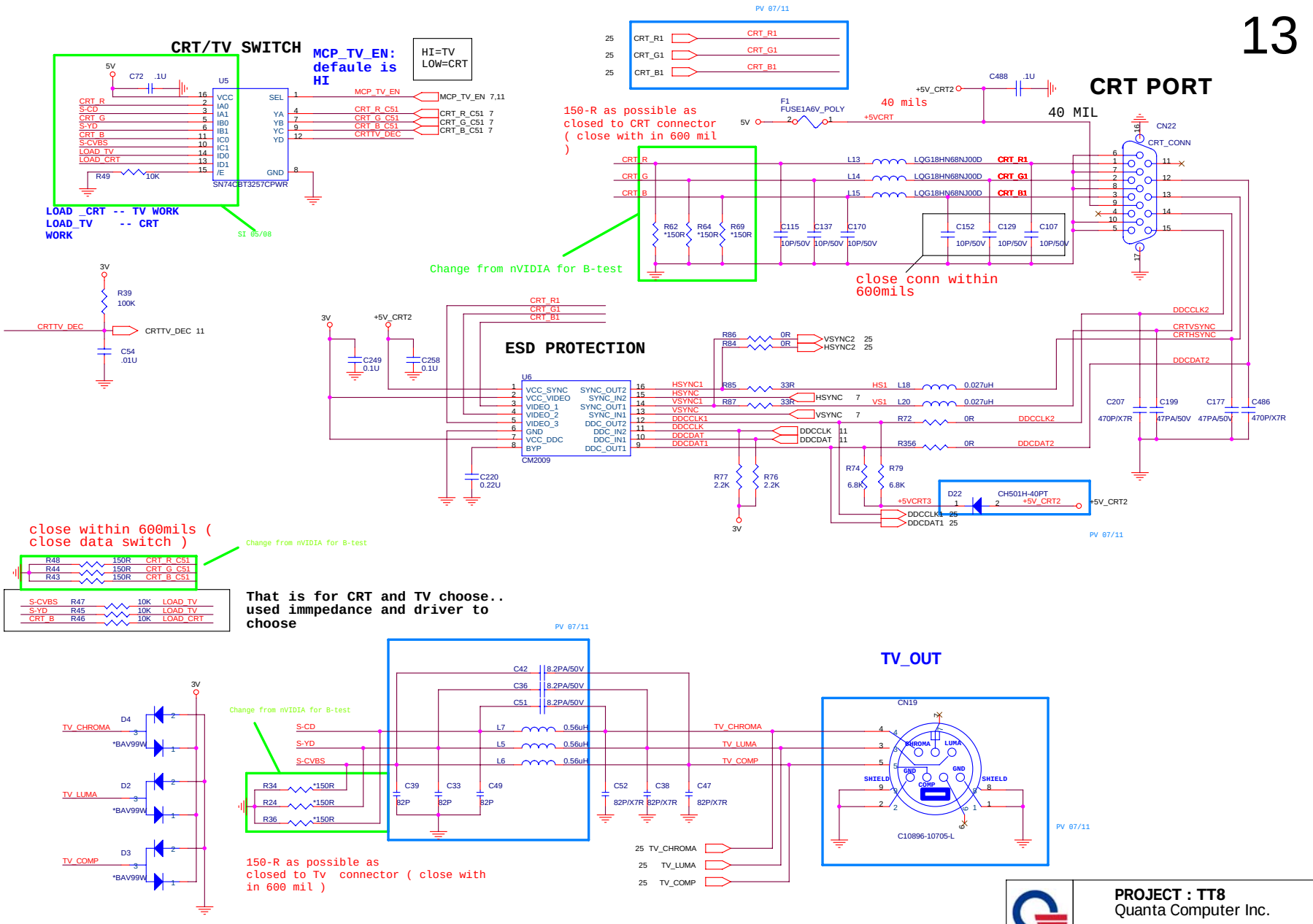
CRT/TV SWITCH
MCP_TV_EN: defaule is HI
HI=TV
LOW=CRT
U5
SN74CBT3257CPWR
LOAD _CRT -- TV WORK
LOAD_TV -- CRT WORK
CRT PORT
CN22
CRT_CONN
40 MIL
40 mils
150-R as possible as closed to CRT connector (close with in 600 mil)
Change from nVIDIA for B-test
close conn within 600mils
ESD PROTECTION
U6
CM2009
close within 600mils (close data switch)
Change from nVIDIA for B-test
That is for CRT and TV choose.. used immpedance and driver to choose
TV_OUT
CN19
C10896-10705-L
150-R as possible as closed to Tv connector (close with in 600 mil)
PROJECT : TT8
Quanta Computer Inc.
Size Custom
Document Number CRT,TV_OUT
Rev 1A
Date: Friday, November 24, 2006
Sheet 13 of 36
N85/RD2/HW1

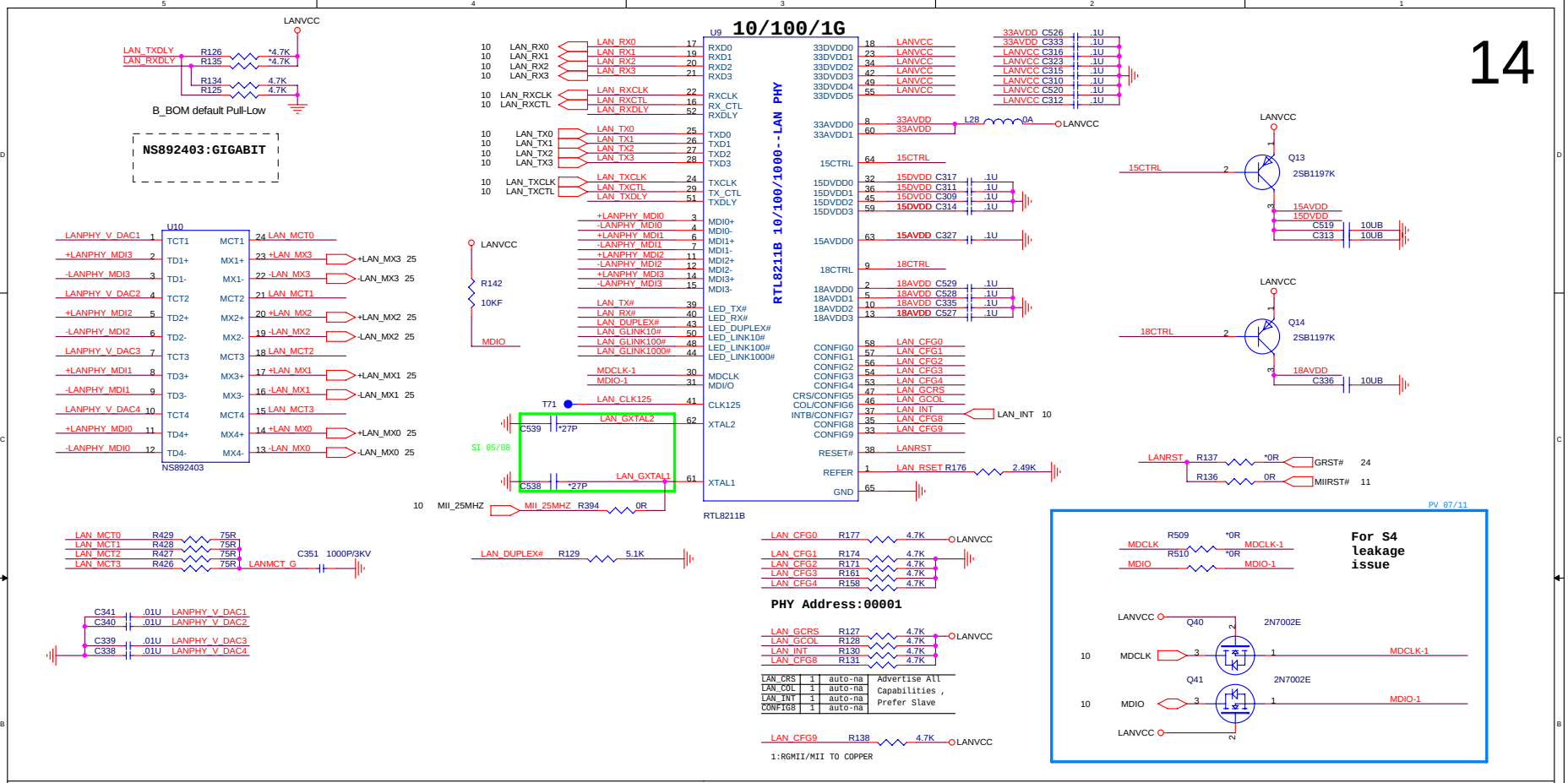
10/100/1G
U9
RTL8211B 10/100/1000--LAN PHY
RTL8211B
LANVCC
LAN_TXDLY
LAN_RXDLY
R126 *4.7K
R135 *4.7K
R134 4.7K
R125 4.7K
B_BOM default Pull-Low
NS892403:GIGABIT
U10
NS892403
R142
10KF
MDIO
T71
C539 *27P
C538 *27P
SI 05/08
MII_25MHZ R394 0R
LAN_GXTAL2
LAN_GXTAL1
LAN_CLK125
LAN_INT 10
LAN_RSET R176 2.49K
L28 0A
Q13
2SB1197K
Q14
2SB1197K
15AVDD
15DVDD
18AVDD
C519 10UB
C313 10UB
C336 10UB
LANRST R137 *0R GRST# 24
R136 0R MIIRST# 11
LAN_MCT0 R429 75R
LAN_MCT1 R428 75R
LAN_MCT2 R427 75R
LAN_MCT3 R426 75R
LANMCT_G
C351 1000P/3KV
LAN_DUPLEX# R129 5.1K
LAN_CFG0 R177 4.7K
LAN_CFG1 R174 4.7K
LAN_CFG2 R171 4.7K
LAN_CFG3 R161 4.7K
LAN_CFG4 R158 4.7K
PHY Address:00001
LAN_GCRS R127 4.7K
LAN_GCOL R128 4.7K
LAN_INT R130 4.7K
LAN_CFG8 R131 4.7K
LAN_CRS 1 auto-na
LAN_COL 1 auto-na
LAN_INT 1 auto-na
CONFIG8 1 auto-na
Advertise All Capabilities , Prefer Slave
LAN_CFG9 R138 4.7K
1:RGMII/MII TO COPPER
PV 07/11
For S4 leakage issue
MDCLK R509 *0R MDCLK-1
MDIO R510 *0R MDIO-1
Q40 2N7002E
Q41 2N7002E
C341 .01U LANPHY_V_DAC1
C340 .01U LANPHY_V_DAC2
C339 .01U LANPHY_V_DAC3
C338 .01U LANPHY_V_DAC4
RJ45
CN25
C100F9-110A4-L
SI 05/08
LAN_GLINK10# D14 CH501H-40PT
LAN_GLINK100# D13 CH501H-40PT
LAN_GLINK1000# D12 CH501H-40PT
LAN_GLED#
LAN_TX# D11 CH501H-40PT
LAN_RX# D10 CH501H-40PT
LAN_YLED#
R156 330F
R191 330F
LAN_YLED
LAN_YLED#
LAN_GLED
LAN_GLED#
C662 1000P/X7R
C663 1000P/X7R
C664 1000P/X7R
C665 1000P/X7R
RJ11
CN1
3800N-E002-NNN
C408 *680P/3KV
C409 *680P/3KV
PV 07/11
PV2 09/26
CN9
C-1770800
NB5/RD2/HW1
PROJECT : TT8
Quanta Computer Inc.
Size Custom
Document Number LAN PHY RTL8211B/8201CL,RJ45
Rev 1A
Date: Friday, November 24, 2006
Sheet 14 of 36

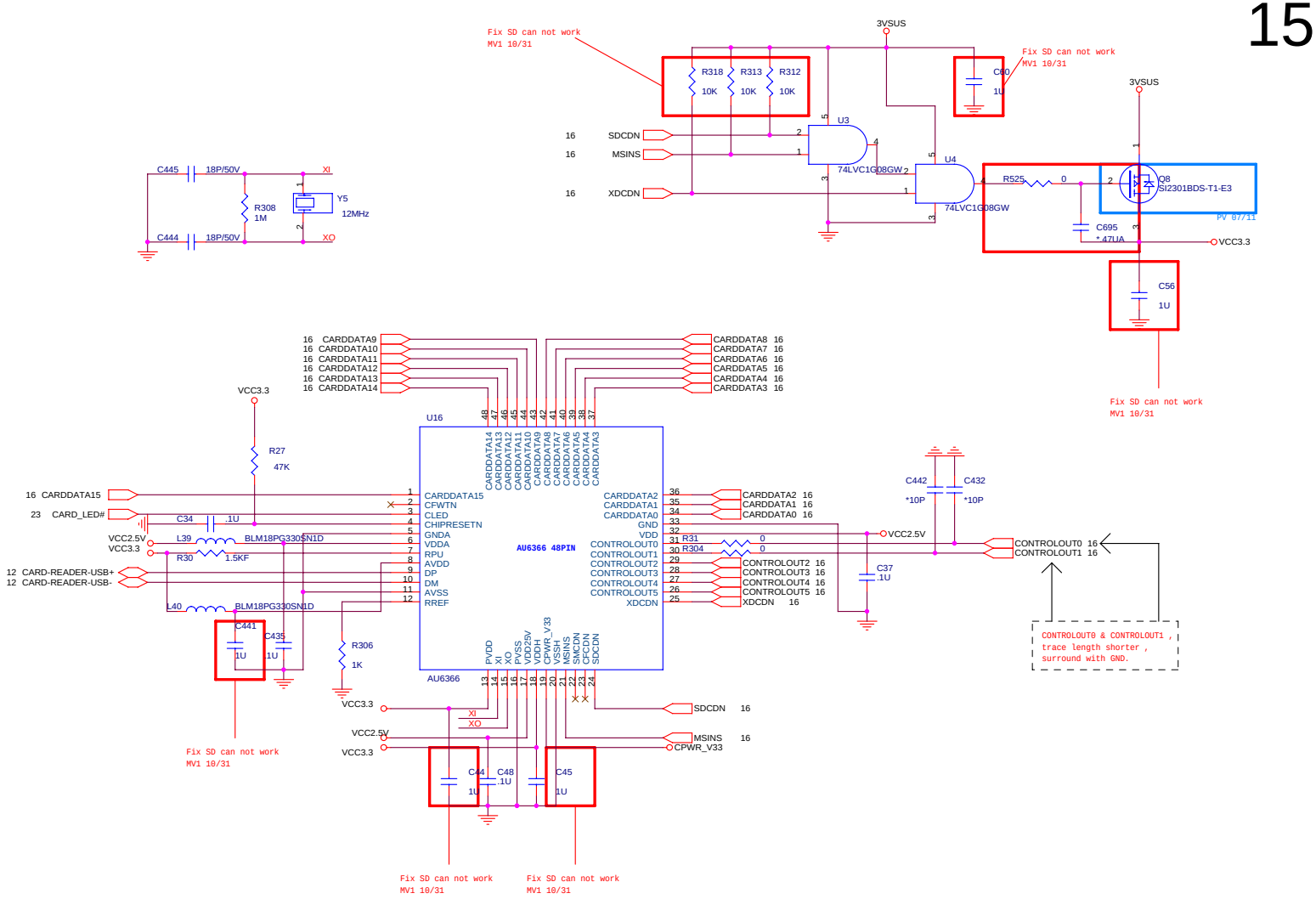

PROJECT : TT8
Quanta Computer Inc.

Size	Document Number	Rev
Custom	AU6366 controller	1A

NB5/RD2/HW1

Date: Friday, November 24, 2006 | Sheet 15 of 36

4 IN1 CARD READER
XD,MMC/SD,MS/MSP

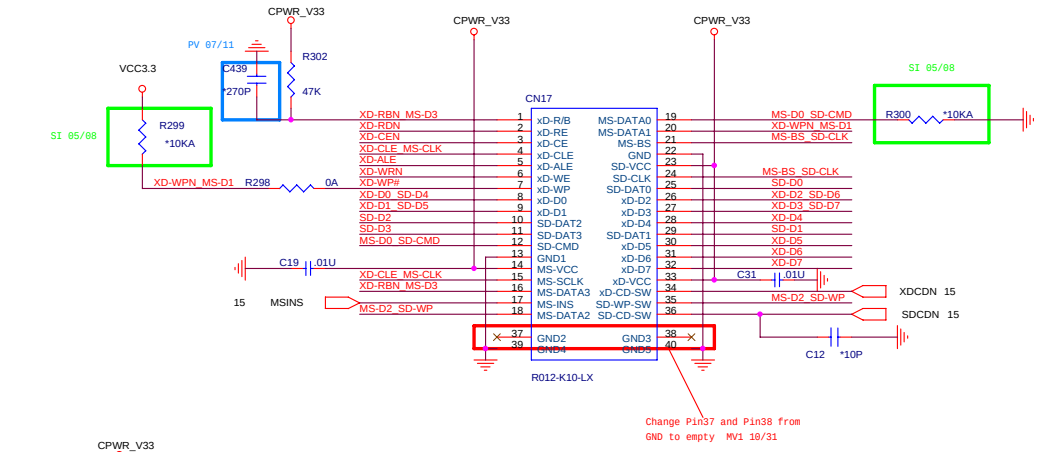

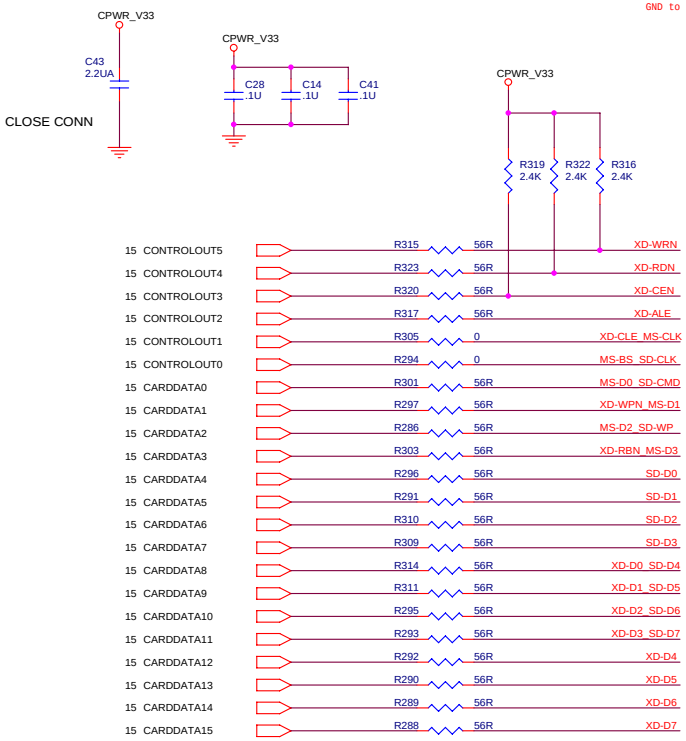

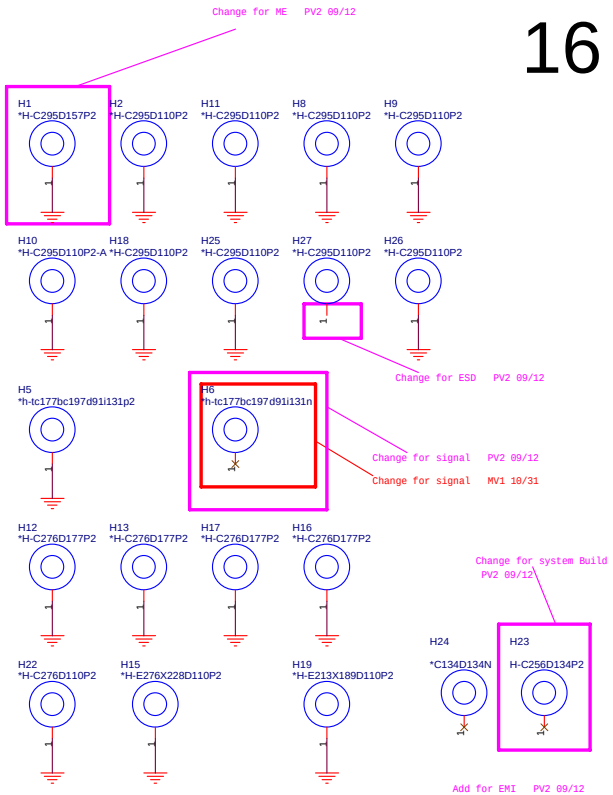

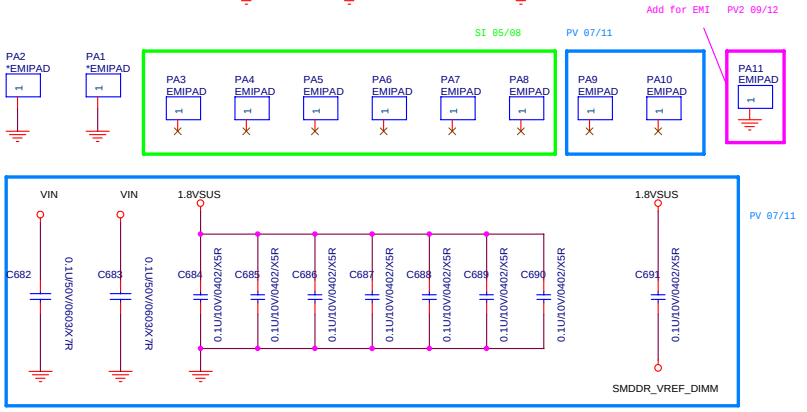

PROJECT : TT8
Quanta Computer Inc.

Size	Document Number	Rev
Custom	Card Reader	1A

NB5/RD2/HW1

Date: Friday, November 24, 2006 Sheet 16 of 36

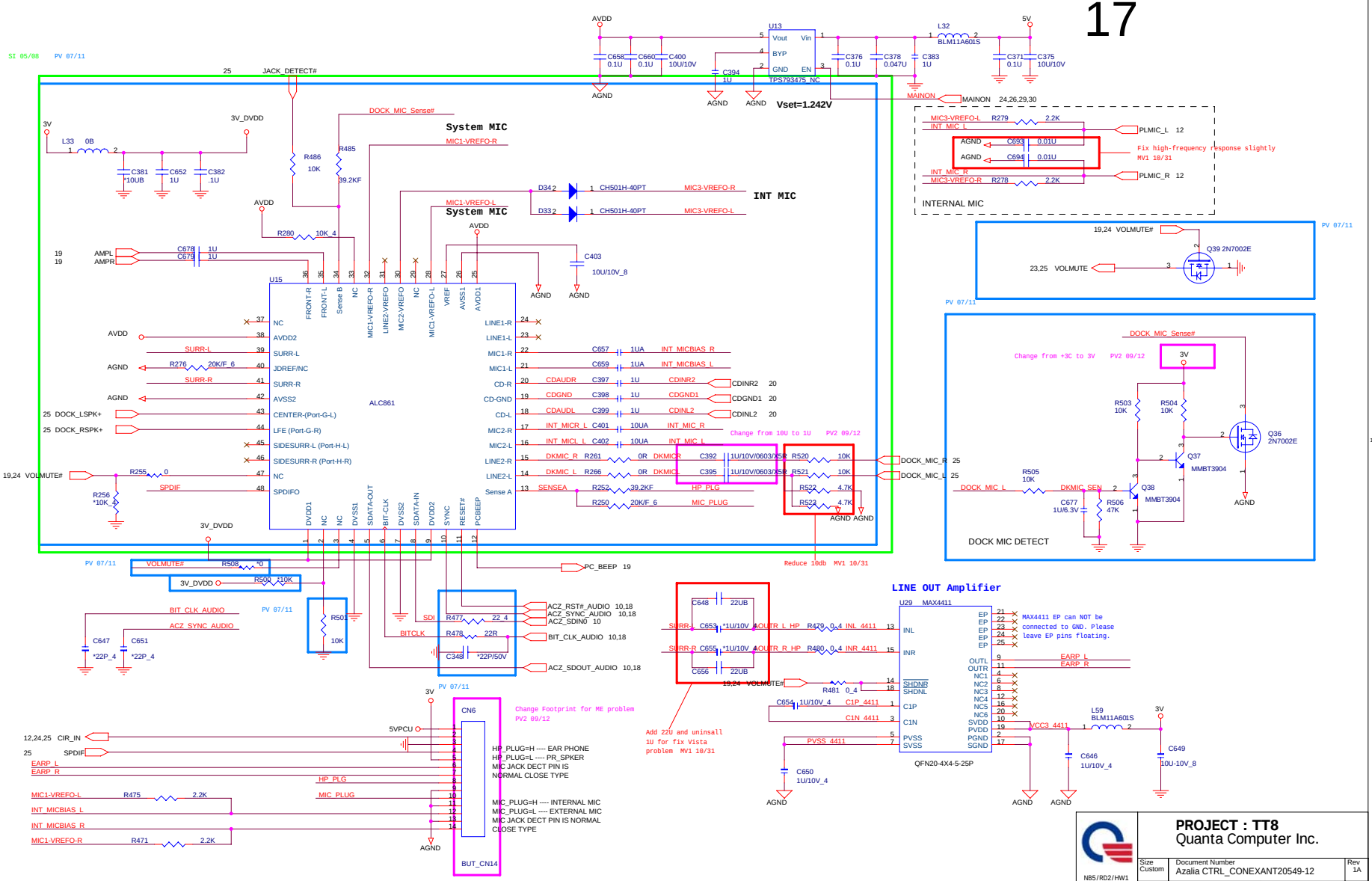
System MIC
INT MIC
ALC861
U15
U13
TPS79375_NC
Vset=1.242V
U29 MAX4411
QFN20-4X4-5-25P
LINE OUT Amplifier
INTERNAL MIC
DOCK MIC DETECT
CN6
BUT_CN14
HP_PLUG=H ---- EAR PHONE
HP_PLUG=L ---- PR_SPKER
MIC JACK DECT PIN IS
NORMAL CLOSE TYPE
MIC_PLUG=H ---- INTERNAL MIC
MIC_PLUG=L ---- EXTERNAL MIC
MIC JACK DECT PIN IS NORMAL
CLOSE TYPE
Fix high-frequency response slightly
MV1 10/31
Change from 10U to 1U PV2 09/12
Change from +3C to 3V PV2 09/12
Reduce 10db MV1 10/31
Add 22U and uninsall
1U for fix Vista
problem MV1 10/31
Change Footprint for ME problem
PV2 09/12
MAX4411 EP can NOT be
connected to GND. Please
leave EP pins floating.
PROJECT : TT8
Quanta Computer Inc.
Azalia CTRL_CONEXANT20549-12
Date: Friday, November 24, 2006
Sheet 17 of 36

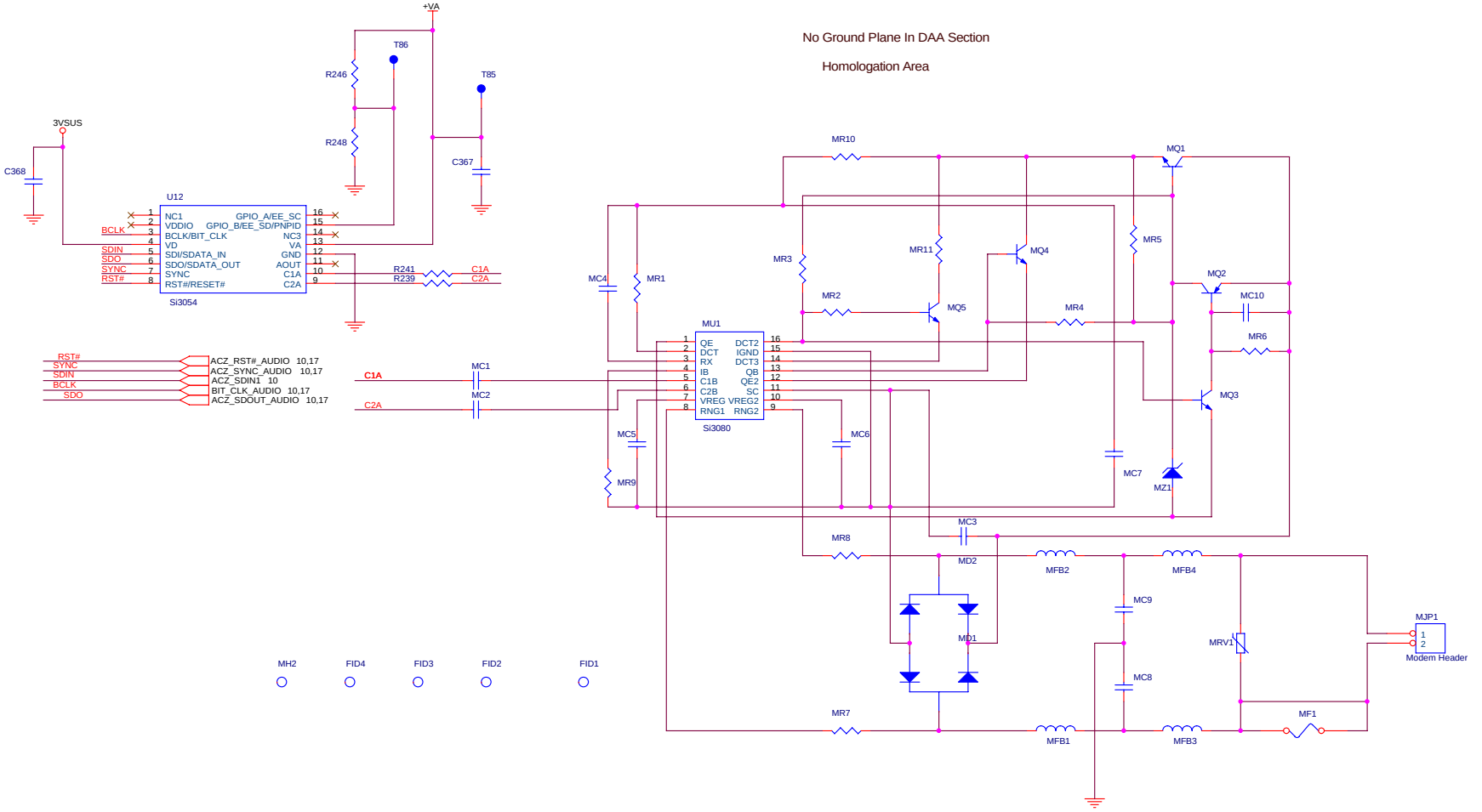

DESIGN SUBJECT TO CHANGE

SILICON LABORATORIES CONFIDENTIAL

N85/RD2/HW1	**PROJECT : TT8** Quanta Computer Inc.	
Size Custom	Document Number MODEM (DAA)	Rev 1A
	Date: Friday, November 24, 2006	Sheet 18 of 36

AUDIO AMPLIFIER

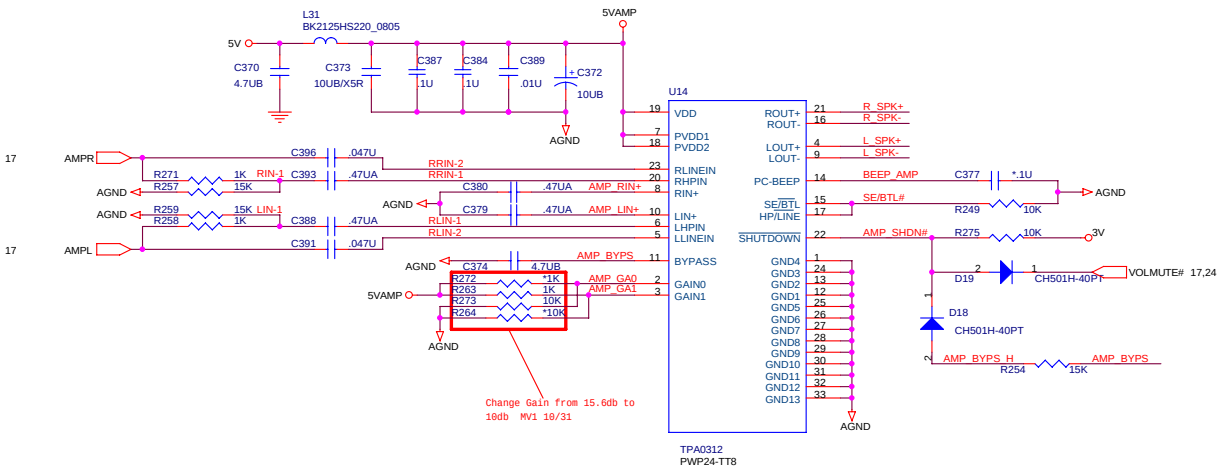

0312 Gain Table

GAIN0	GAIN1	SE/BTL	AV(INV)
0	0	0	6dB
0	1	0	10dB
1	0	0	15.6dB
1	1	0	21.6dB
x	x	1	4.1dB

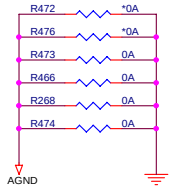

INT. SPEAKER

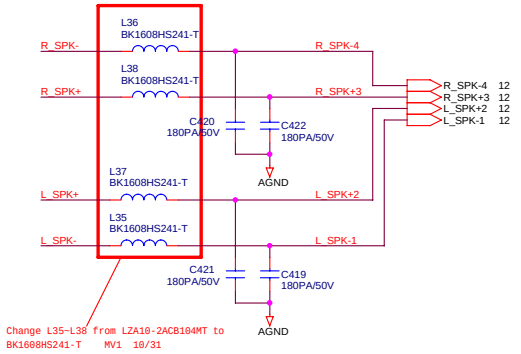

PCSPK BEEP

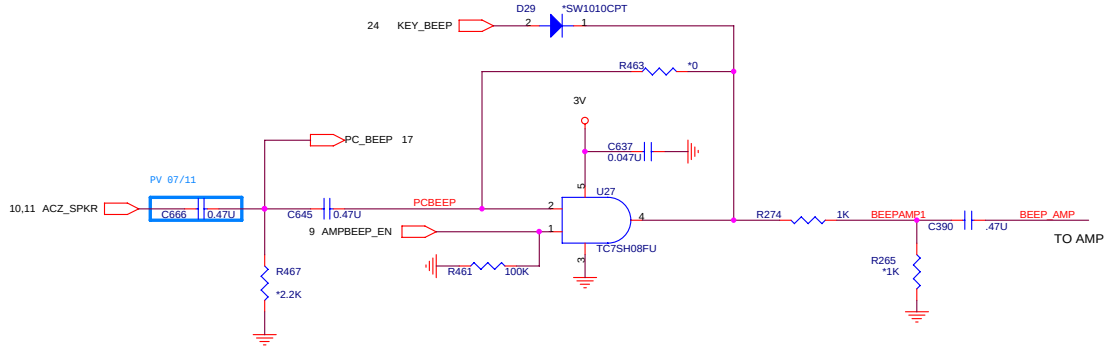

PROJECT : TT8
Quanta Computer Inc.

Size	Document Number	Rev
Custom	JACK, AMP_TPA0312	1A

Date: Friday, November 24, 2006 | Sheet 19 of 36

N85/RD2/HW1

CD-ROM

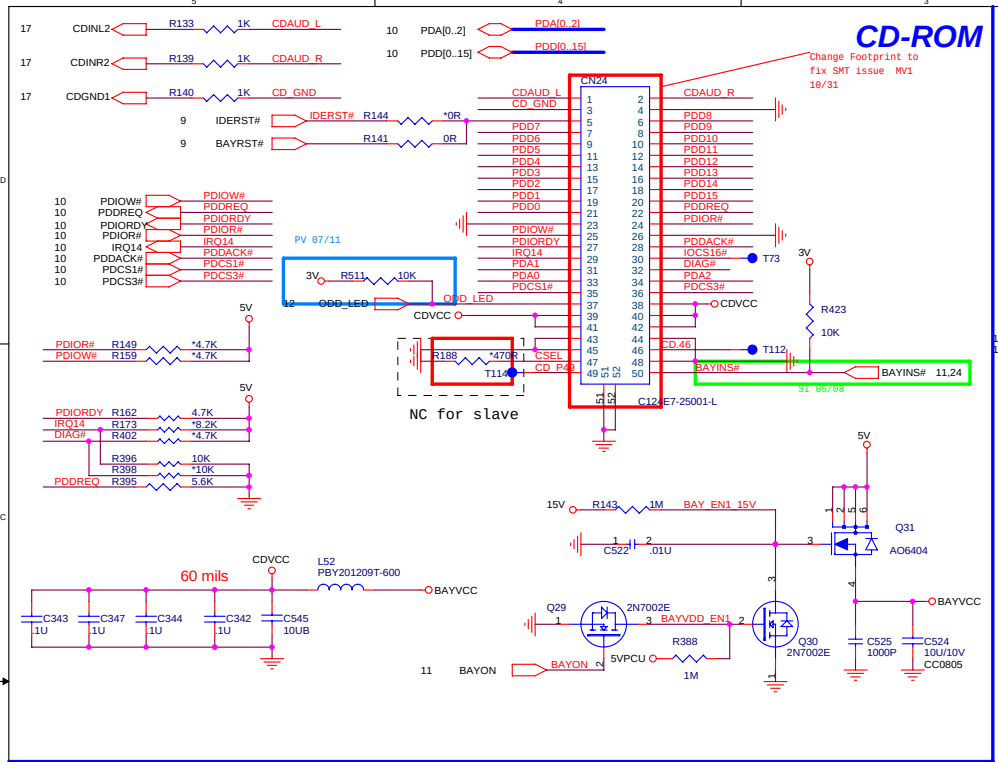

USBX3

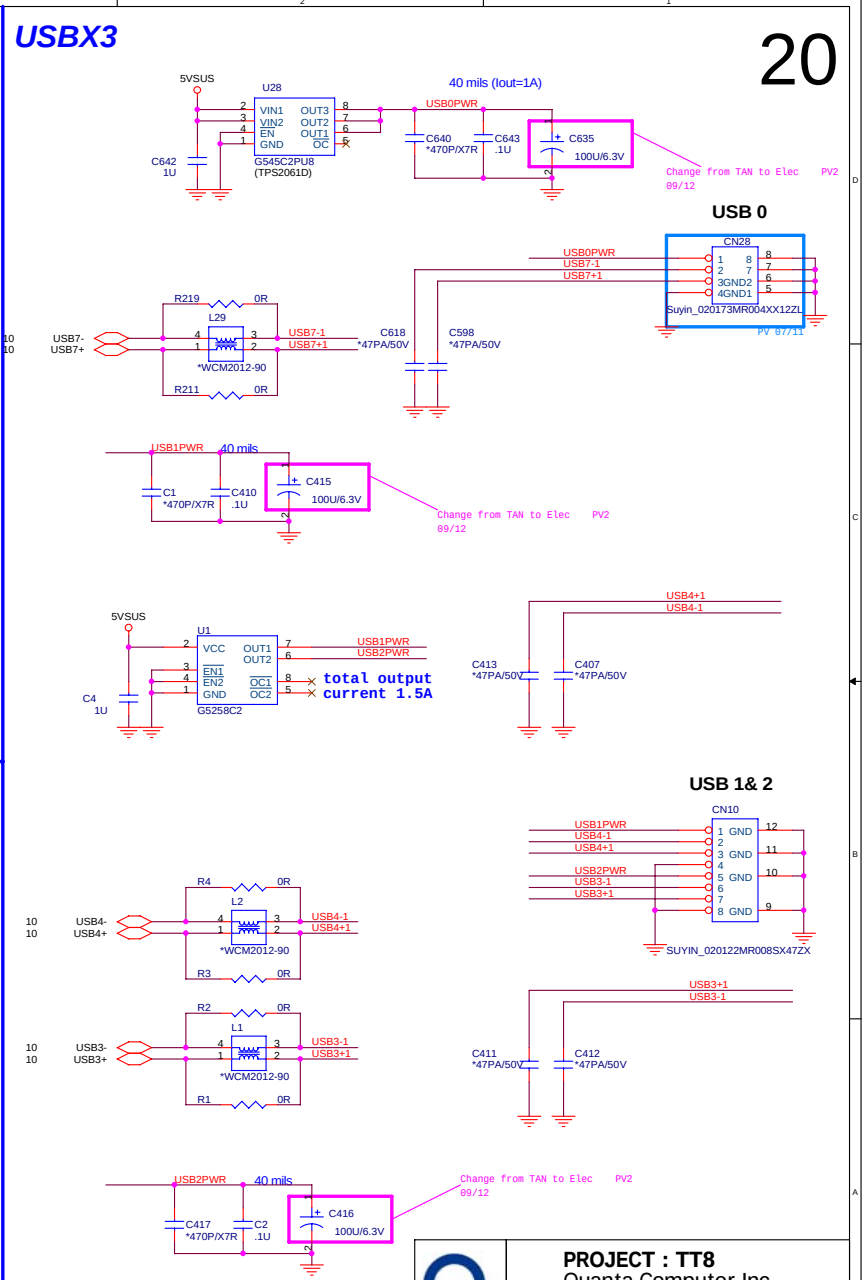

SATA CONNECTOR

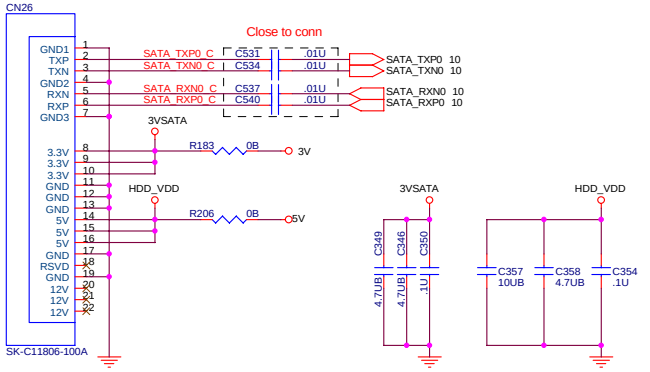

PROJECT : TT8
Quanta Computer Inc.

N85/RD2/HW1

Size	Document Number	Rev
Custom	SATA HDD, CD-ROM,USBX2	1A

Date: Friday, November 24, 2006 Sheet 20 of 36

Mini PCI-E Card 1
WLAN

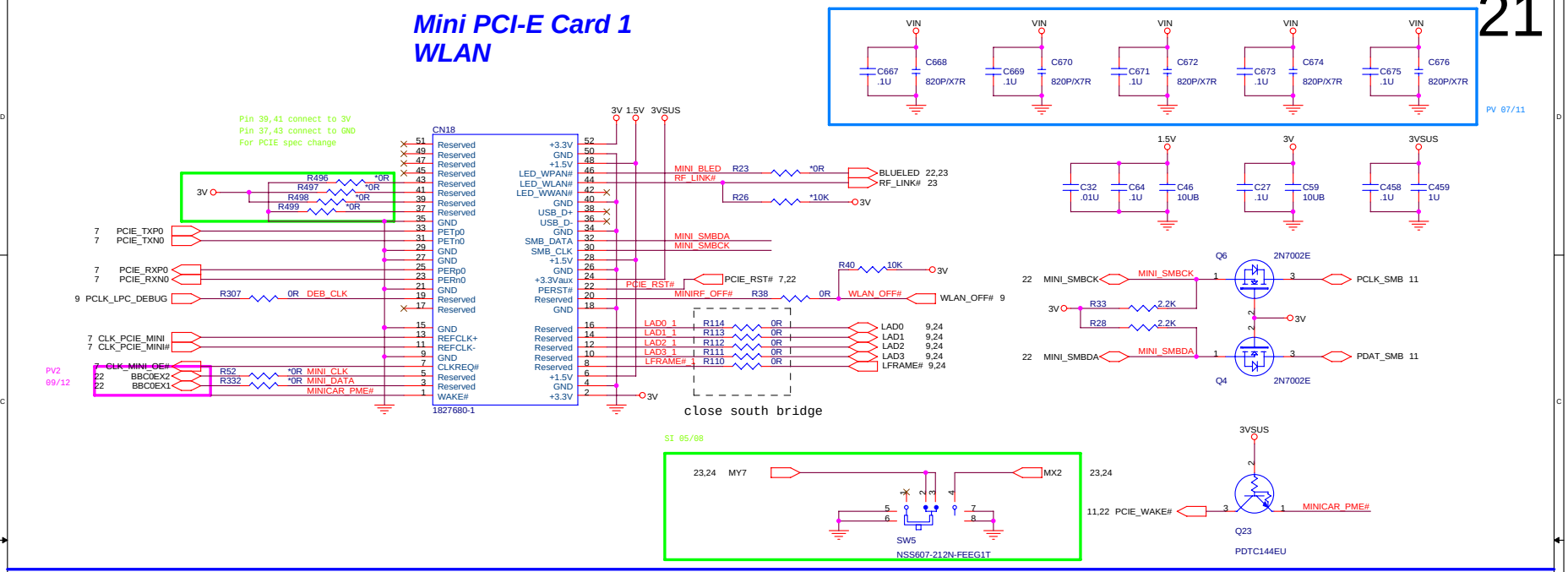

Mini PCI-E Card 2
WWAN(W/SIM)

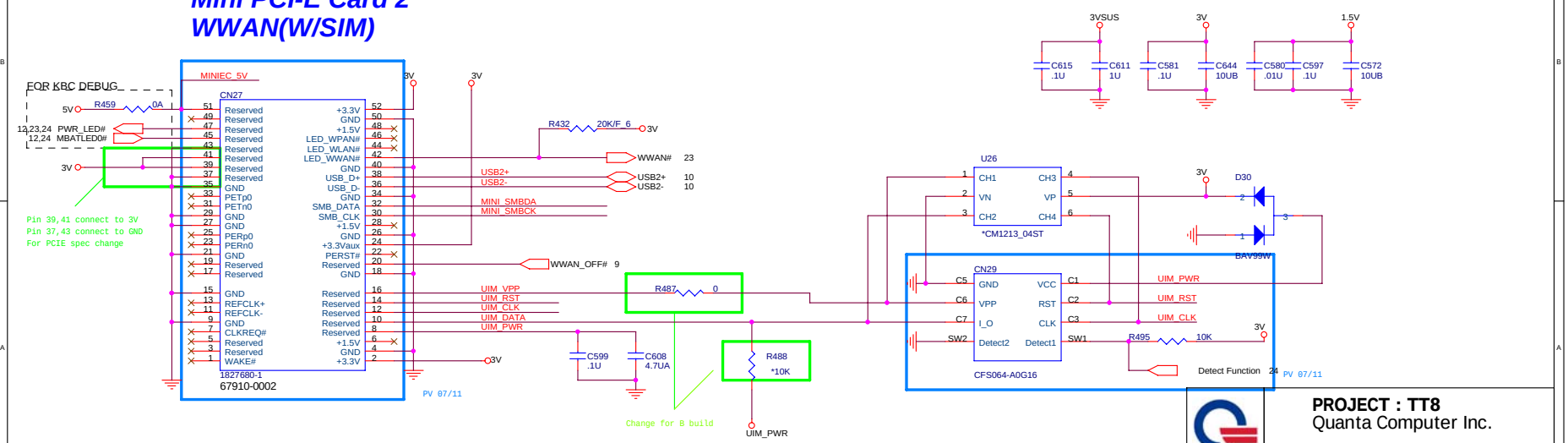

PROJECT : TT8
Quanta Computer Inc.

Size	Document Number	Rev
Custom	MINI CARD	1A

NB5/RD2/HW1

Date: Friday, November 24, 2006 | Sheet 21 of 36

NEWCARD

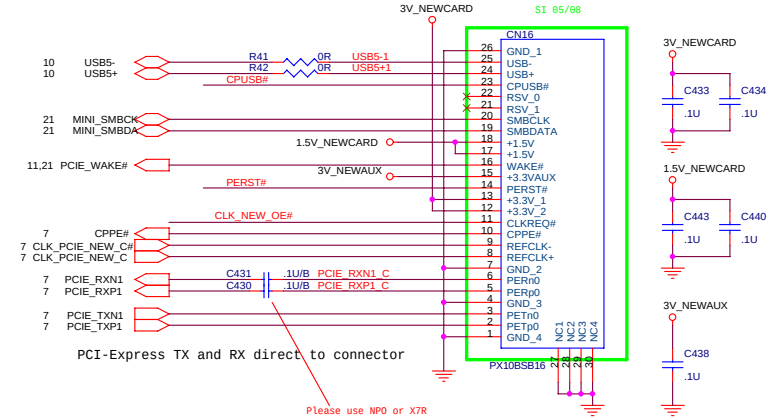

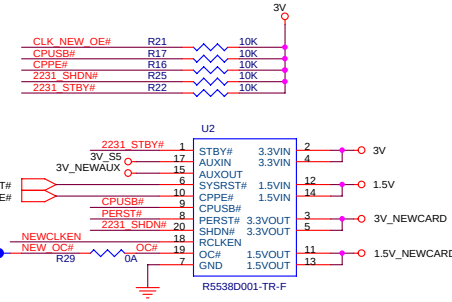

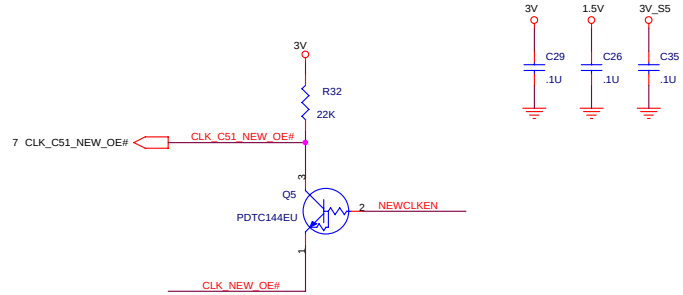

BLUETOOTH

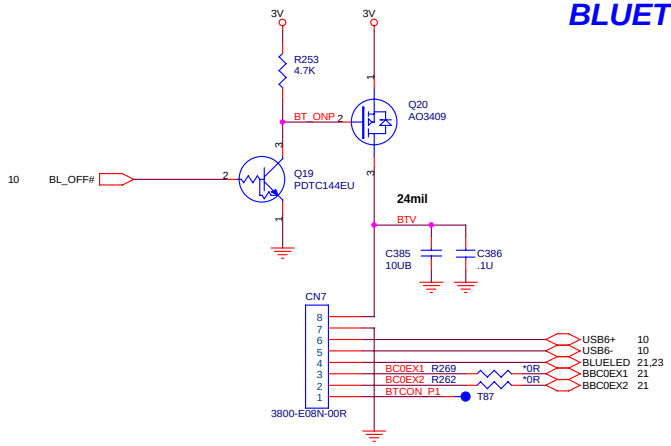

NB5/RD2/HW1	**PROJECT : TT8** Quanta Computer Inc.		
Size Custom	Document Number NEW CARD/BT		Rev 1A
Date: Friday, November 24, 2006	Sheet 22 of 36		

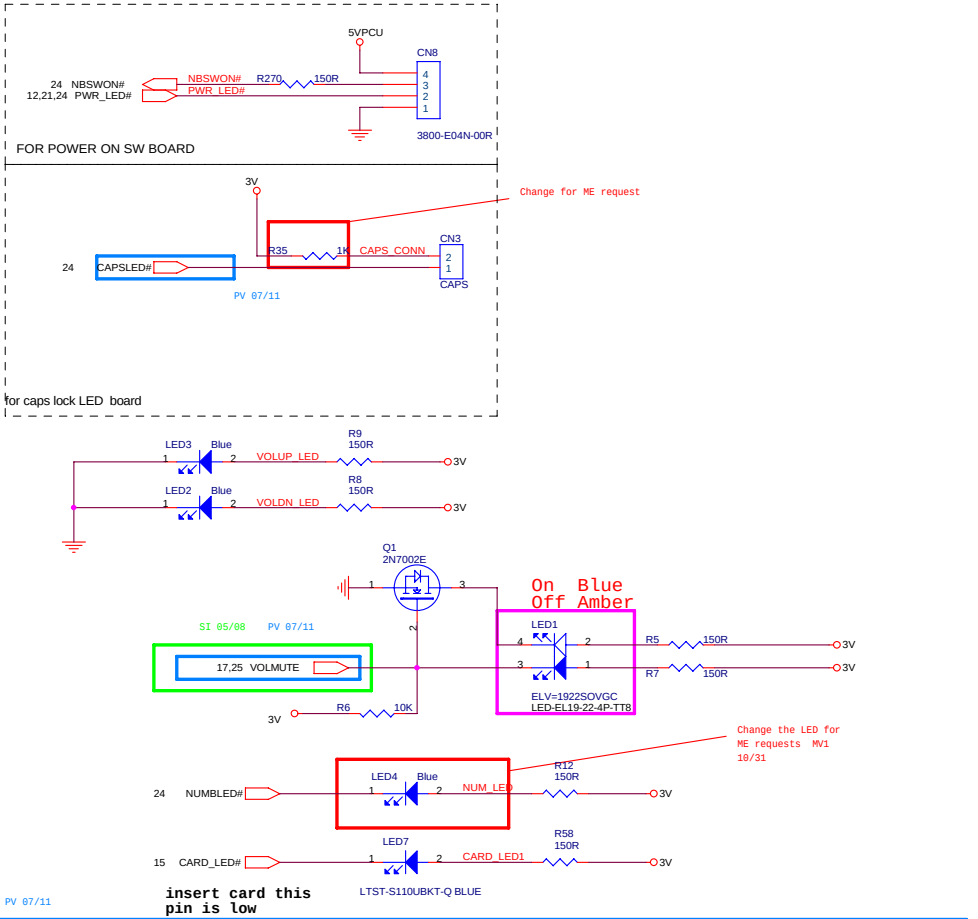

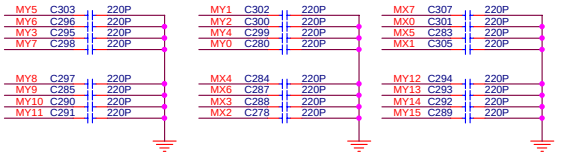

KEYBOARD PULL-UP

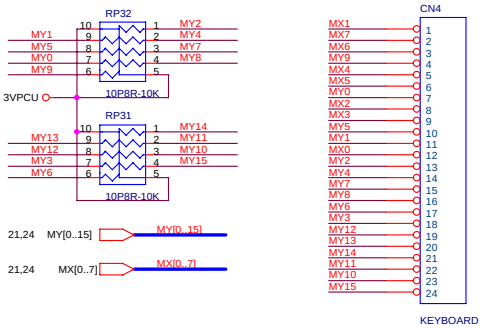

NB5/RD2/HW1	**PROJECT : TT8** Quanta Computer Inc.	
Size Custom	Document Number LED/KEYBOARD/TP	Rev 1A
Date: Friday, November 24, 2006	Sheet 23 of 36	

STRAP PIN

MY0	47	TP_TEST: Clock Test Mode Low: Test Mode. HIGH: 32kHz clock in normal runing
MY1	48	TP_PLL: DPLL Test Mode Low: Test Mode. HIGH: Normal operation
MY2	49	TP_SPI: Default flash access Low: Boot from SPI flash part HIGH: Boot from ISA flash part
MY3	50	TP_ISP: In System Programming Mode Low: ISP mode HIGH: Normal Mode

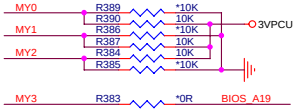

BIOS ROM

8Mbit (1M Byte), TSSOP40

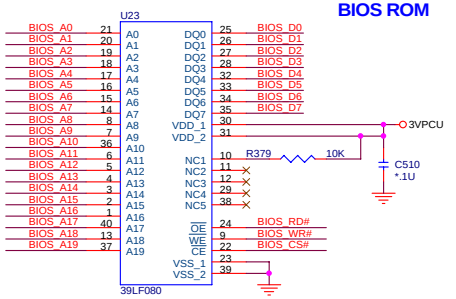

4Mbit (512k Byte), PLCC

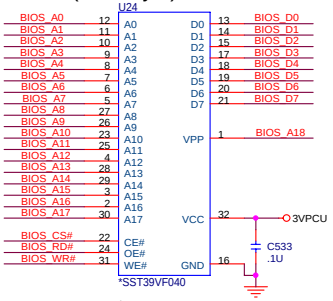

ROM CHIP P/N:AKE34ZAPK01

TOUCH PAD CONNECTOR

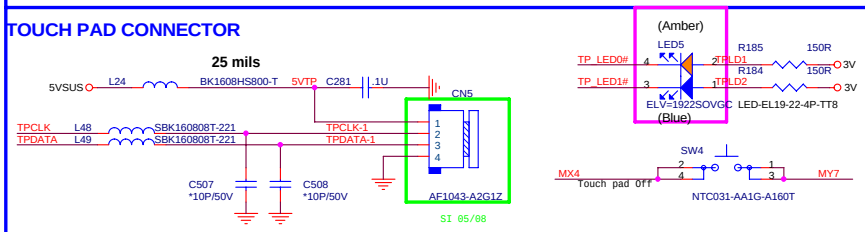

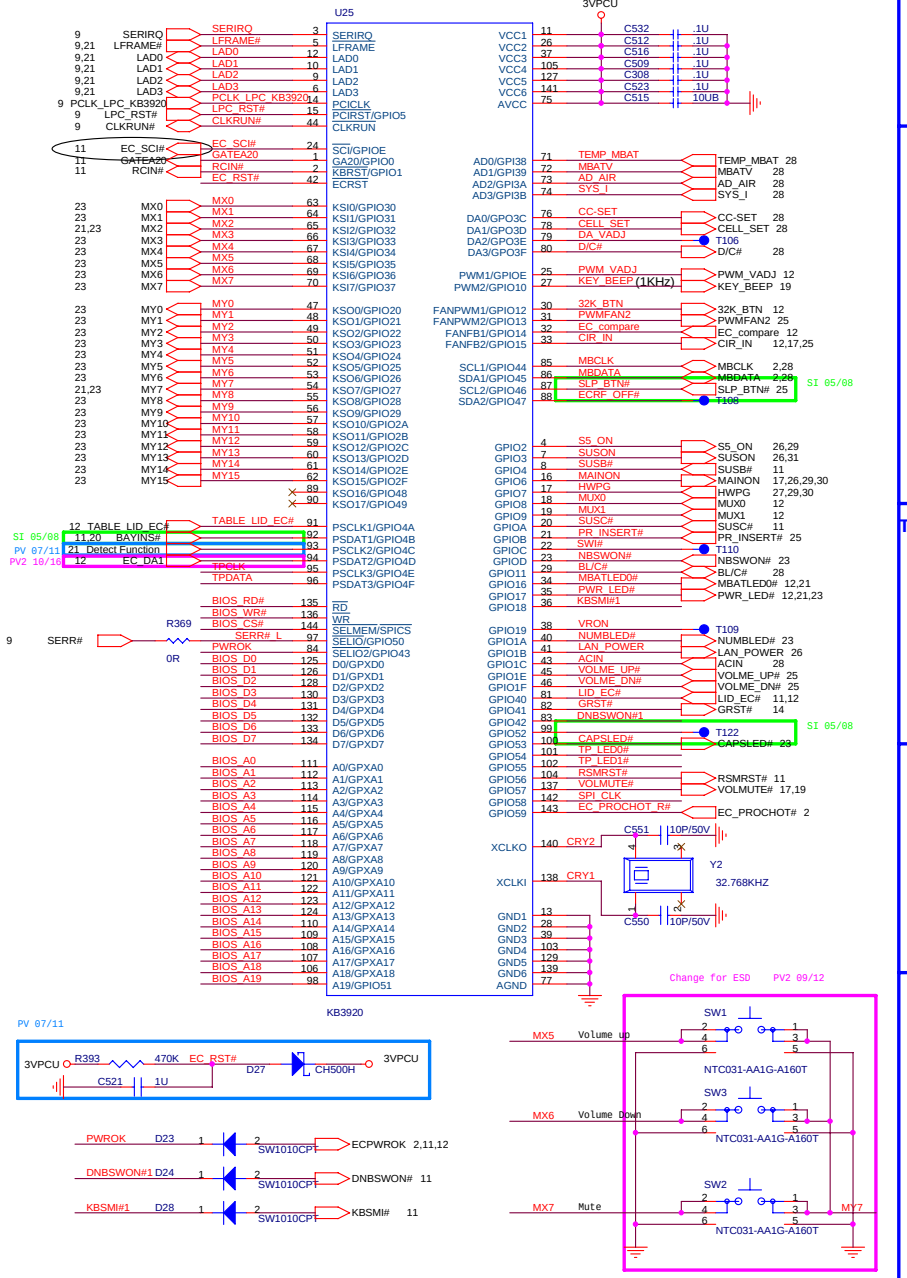

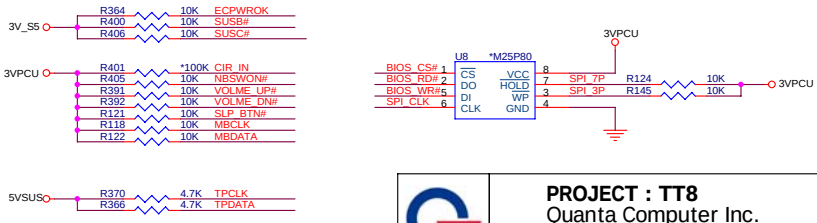

PROJECT : TT8
Quanta Computer Inc.

Size	Document Number	Rev
Custom	KB3920	1A

NB5/RD2/HW1

Date: Friday, November 24, 2006 Sheet 24 of 36

CABLE DOCK

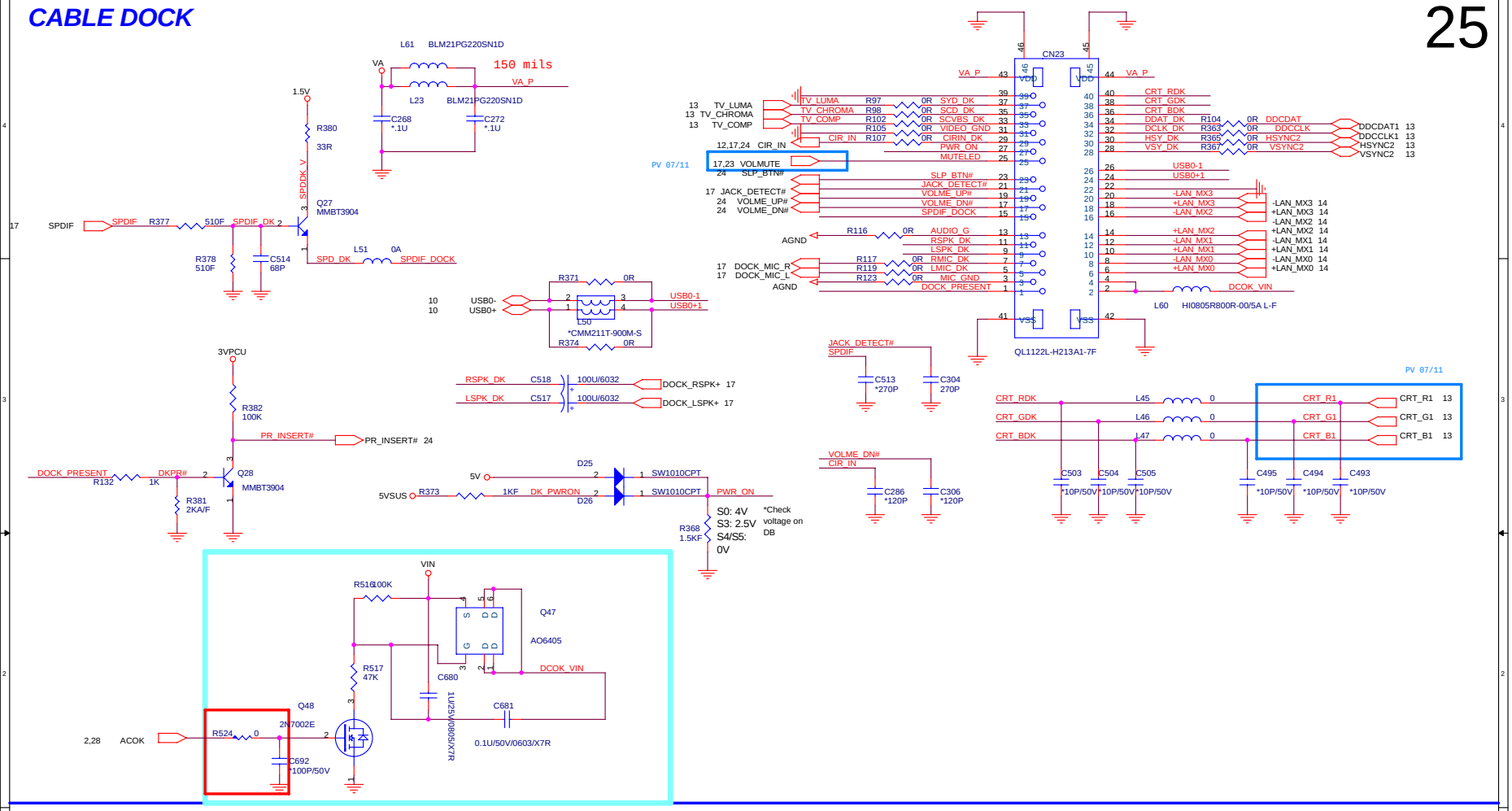

FAN

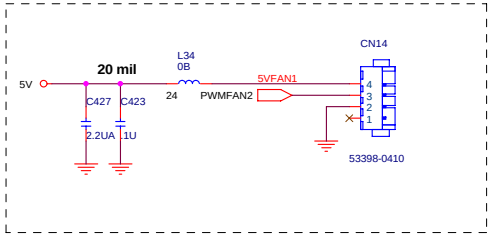

FAN1 PWM CONNECTOR

N85/RD2/HW1	**PROJECT : TT8** Quanta Computer Inc.	
Size Custom	Document Number CABLE DOCKING	Rev 1A
Date: Friday, November 24, 2006	Sheet 25 of 36	

DISCHARGE 26

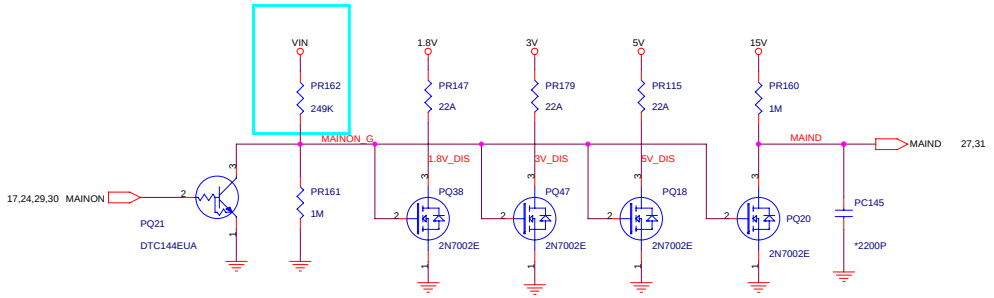

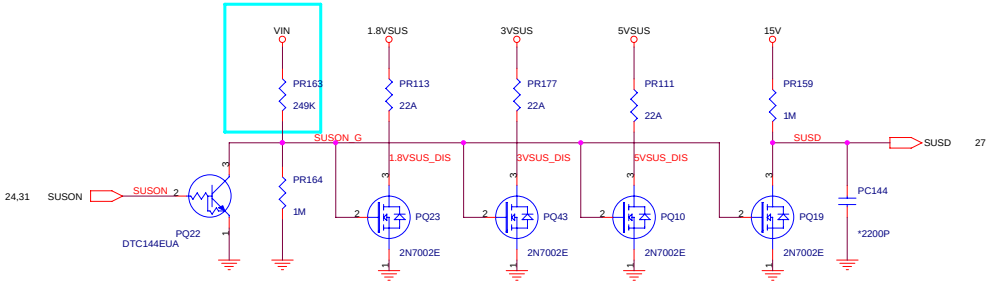

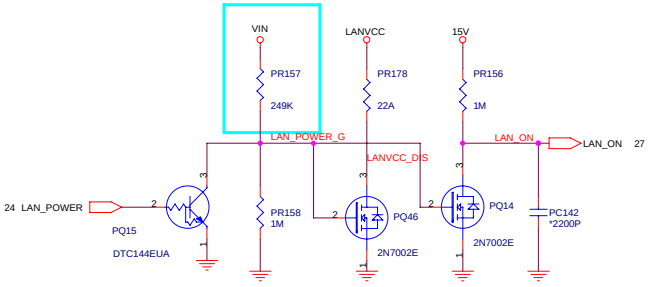

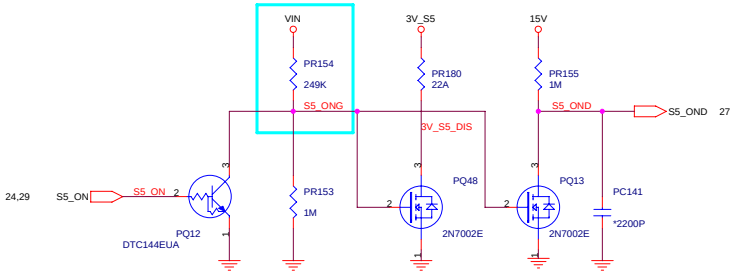

PROJECT : TT8
Quanta Computer Inc.

Size	Document Number	Rev
Custom	DISCHARGE	1A

NB5/RD2/HW1

Date: Friday, November 24, 2006 Sheet 26 of 36

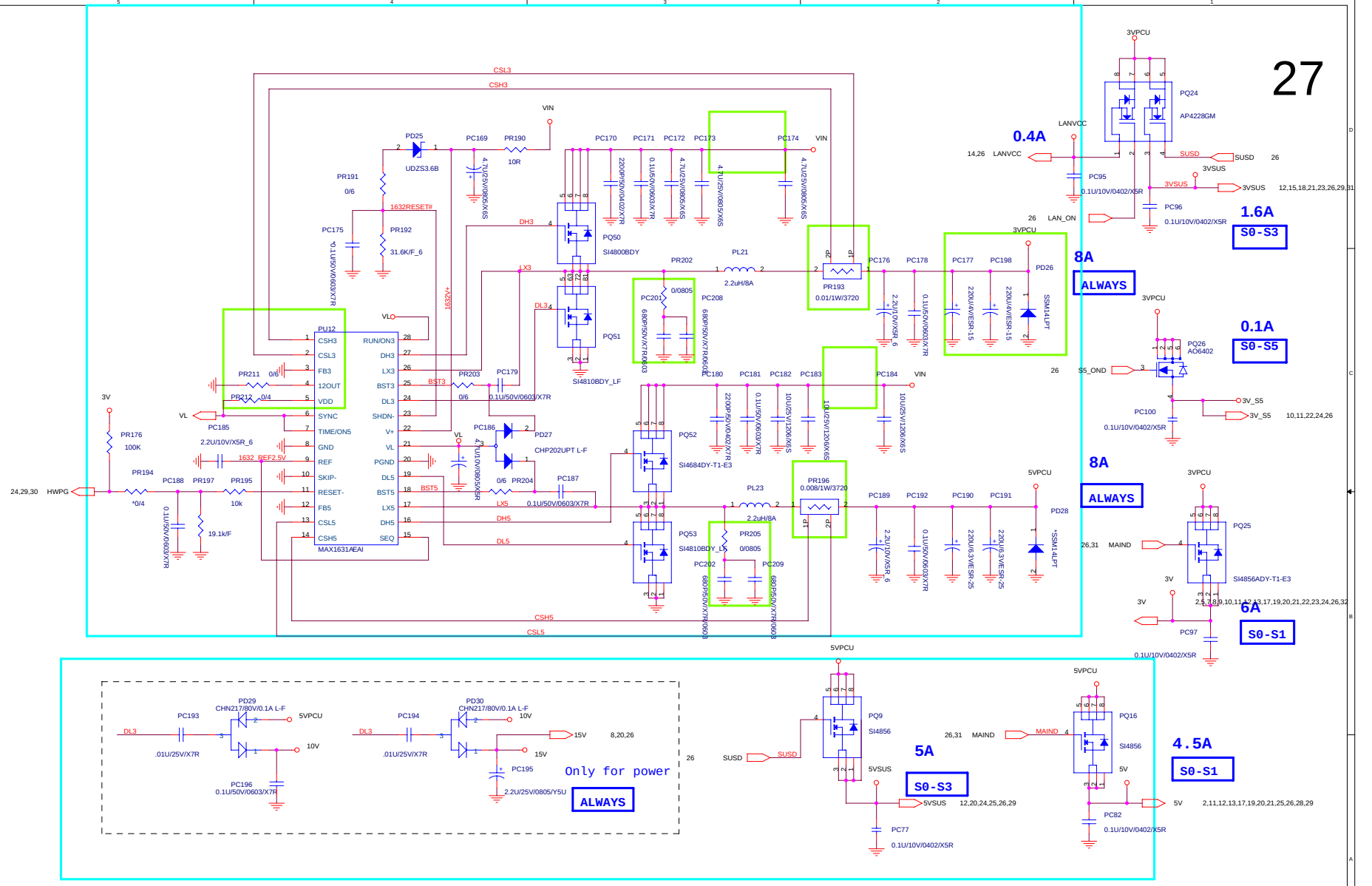

PROJECT : TT8
Quanta Computer Inc.

Size	Document Number	Rev
Custom	MAX1632A	1A

NB5/RD2/HW1

Date: Friday, November 24, 2006 Sheet 27 of 36

Adapter 18.5V/3.51A/65W

From Docking CNN

28

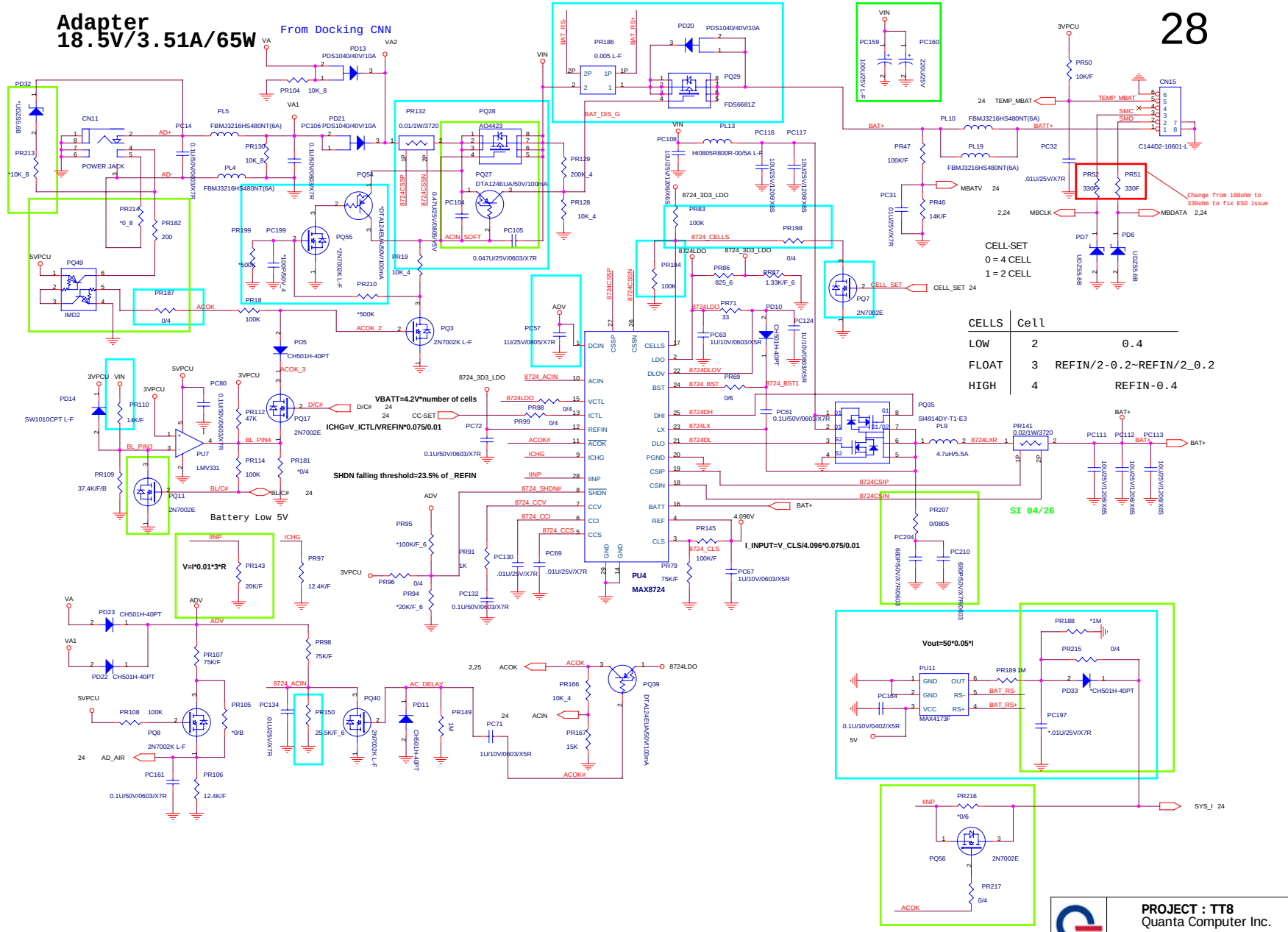

CELLS	Cell	
LOW	2	0.4
FLOAT	3	REFIN/2-0.2~REFIN/2_0.2
HIGH	4	REFIN-0.4

PROJECT : TT8
Quanta Computer Inc.

Size	Document Number	Rev
Custom	MAX8724A CHARGE	1A

NB5/RD2/HW1

Date: Friday, November 24, 2006 Sheet 28 of 36

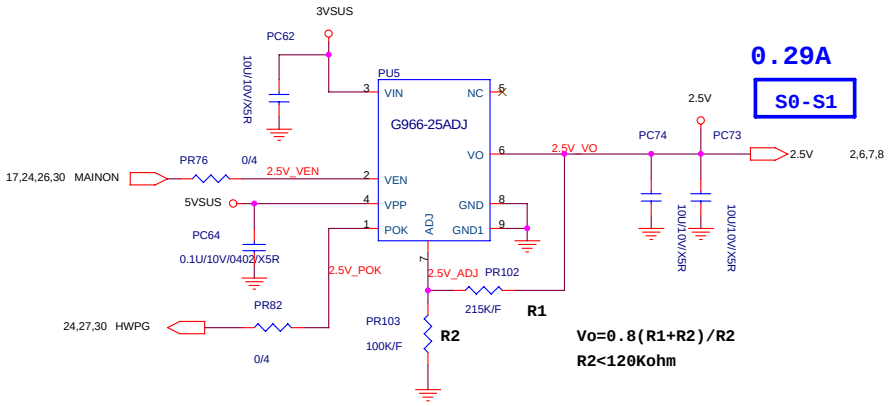

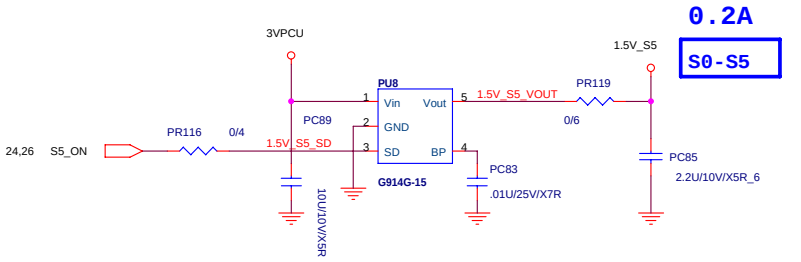

EMI

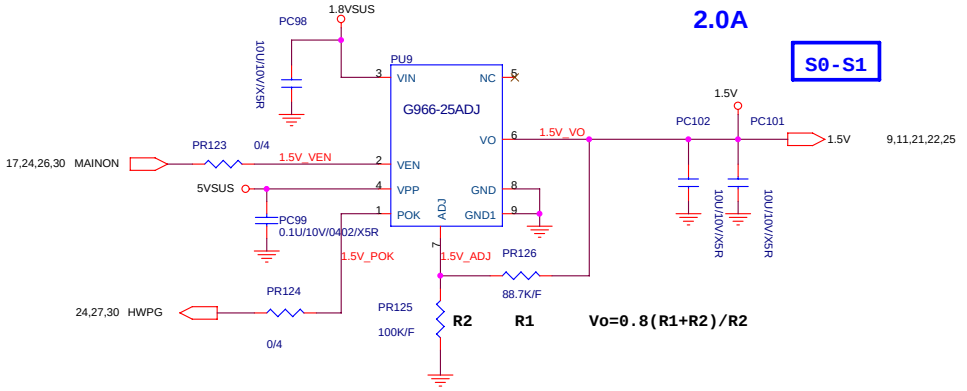

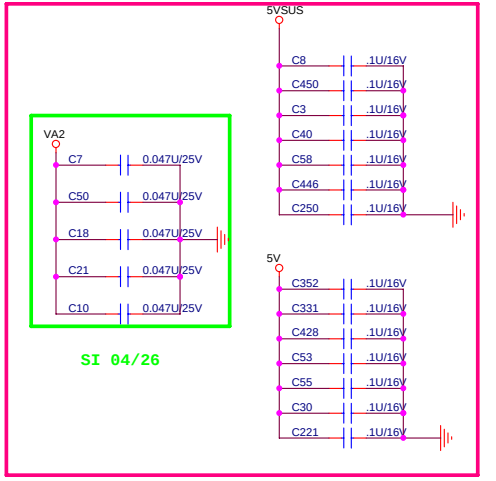

PROJECT : TT8
Quanta Computer Inc.

Size	Document Number	Rev
Custom	2.5V/1.5V_S5/1.5V	1A

NB5/RD2/HW1

Date: Friday, November 24, 2006 | Sheet 29 of 36

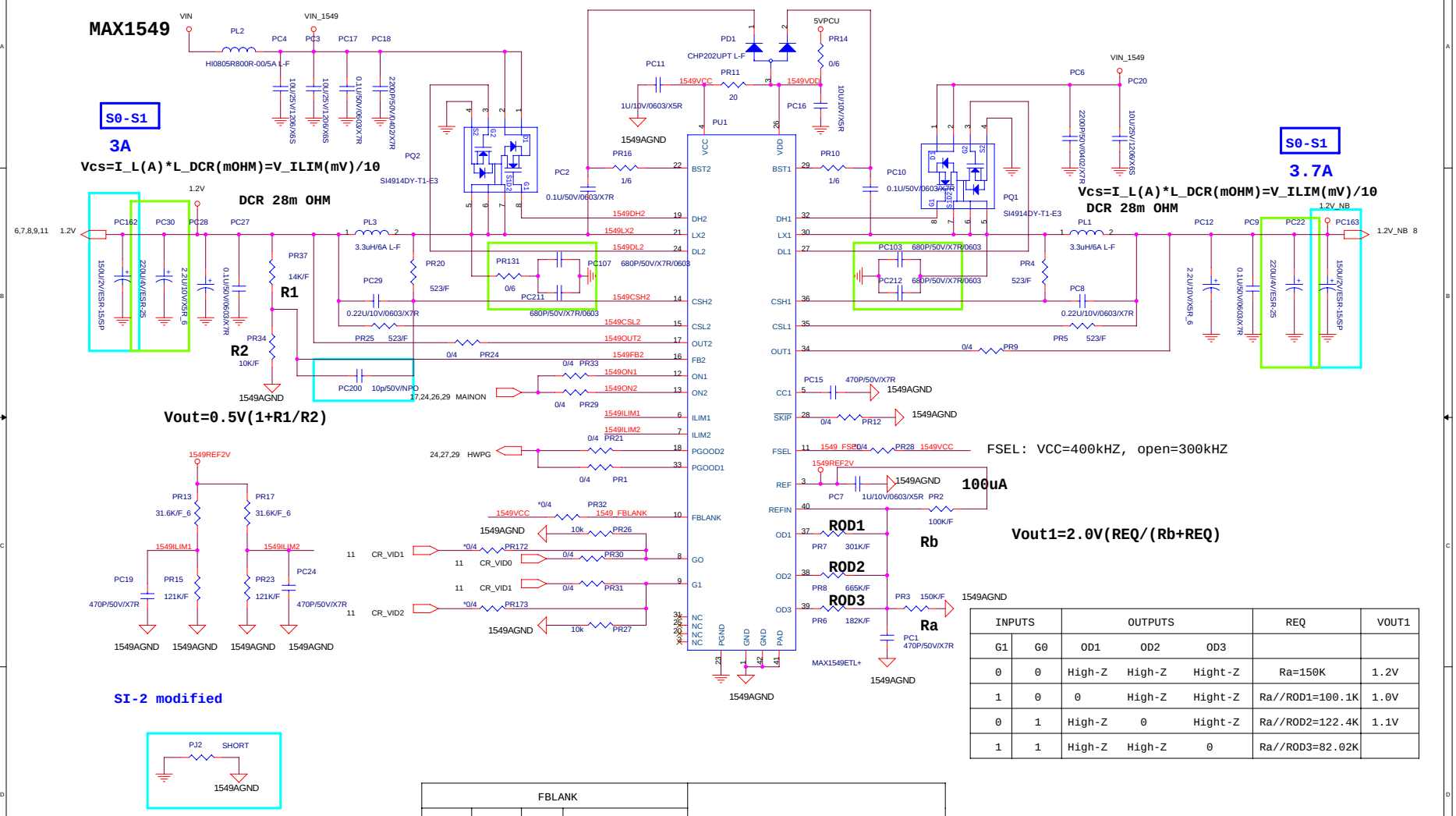

INPUTS		OUTPUTS			REQ	VOUT1
G1	G0	OD1	OD2	OD3		
0	0	High-Z	High-Z	Hight-Z	Ra=150K	1.2V
1	0	0	High-Z	Hight-Z	Ra//ROD1=100.1K	1.0V
0	1	High-Z	0	Hight-Z	Ra//ROD2=122.4K	1.1V
1	1	High-Z	High-Z	0	Ra//ROD3=82.02K	

FBLANK				
VCC	OPEN	REF	GND	
150us	100us	50us	blanking disabled	OU1 fault protection and PGO1 blanking
150us	100us	50us	100us	OU1 forced-PWM transition operation

PROJECT : TT8
Quanta Computer Inc.

NB5/RD2/HW1

Size	Document Number	Rev
Custom	MAX1549 1.2V/1.2V_NB	1A

Date: Friday, November 24, 2006 Sheet 30 of 36

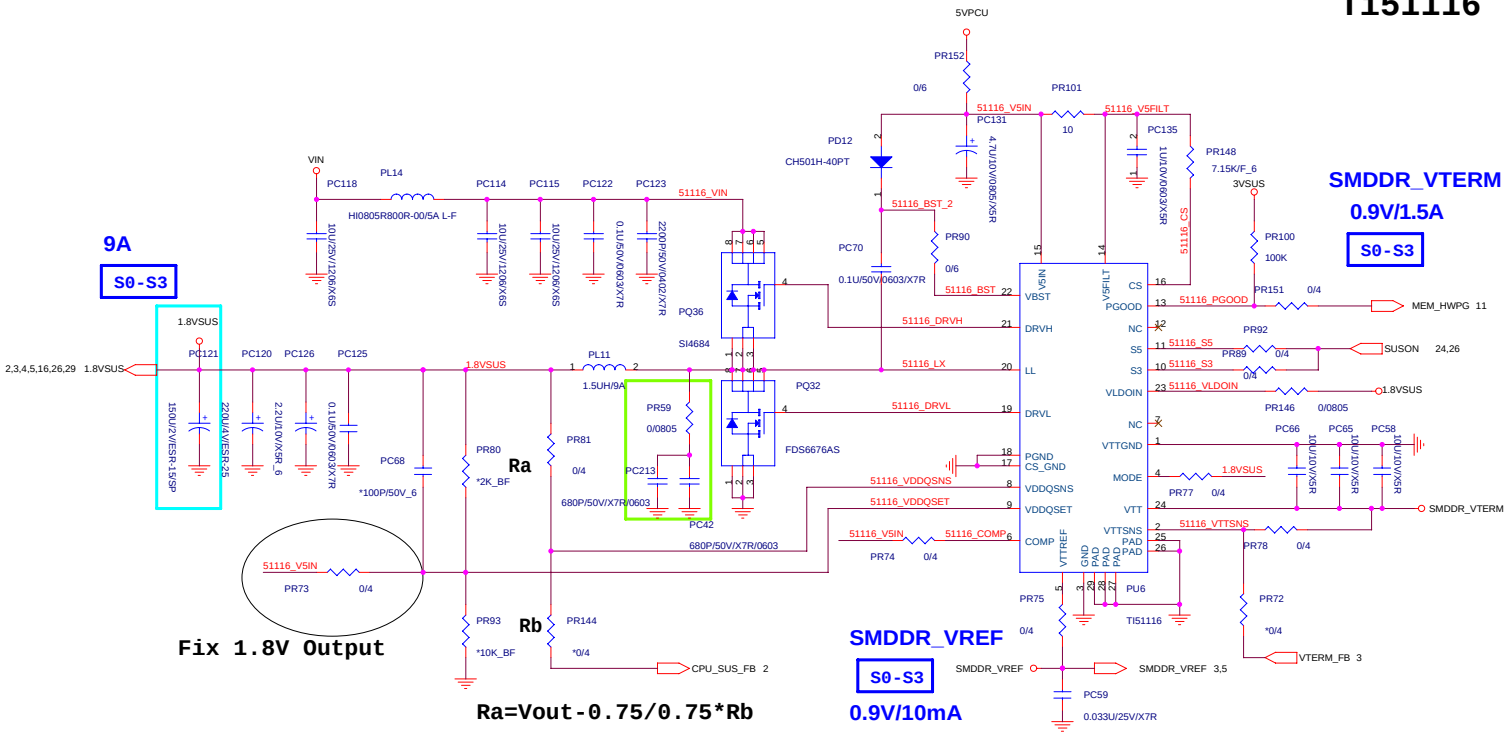

Ra=Vout-0.75/0.75*Rb

Rb value from 100K to 300K ohm

Mode	Discharge Mode
V5IN	No discharge
VDDQ	Tracking discharge
Gnd	Non-tracking discharge

V_TRIP(mV)=R_TRIP(Kohm)*10(uA)

I_OCP=V_trip/Rds_on+I_Ripple/2

VDDQSET	VDDQ(V)	VTTREF and Vtt	Note
GND	2.5	V_ vddqsns/2	DDR
V5IN	1.8	V _vddqsns/2	DDR2
FB	adjustable	V_VDDQSNS/2	1.5V<VDDQ<3V

1.8V
0.2A
S0-S1

NB5/RD2/HW1	PROJECT : TT8 Quanta Computer Inc.		
Size Custom	Document Number Ti51116 1.8VSUS/1.8V/SMDDR		Rev 1A
	Date: Friday, November 24, 2006	Sheet 31 of 36	

VCC_CORE MAX8774

Slew rate=(12.5mVus)*(71.5K/R_TIME)
VFB=V_VID+0.125(VREF-VOFS)
VRHOT is low when VTHRM below 1.5V
Tsw=16.26pF(R_TON+6.5K)ohm
CCV CAP=470pF*(2/total phase)*300kHZ/fsw

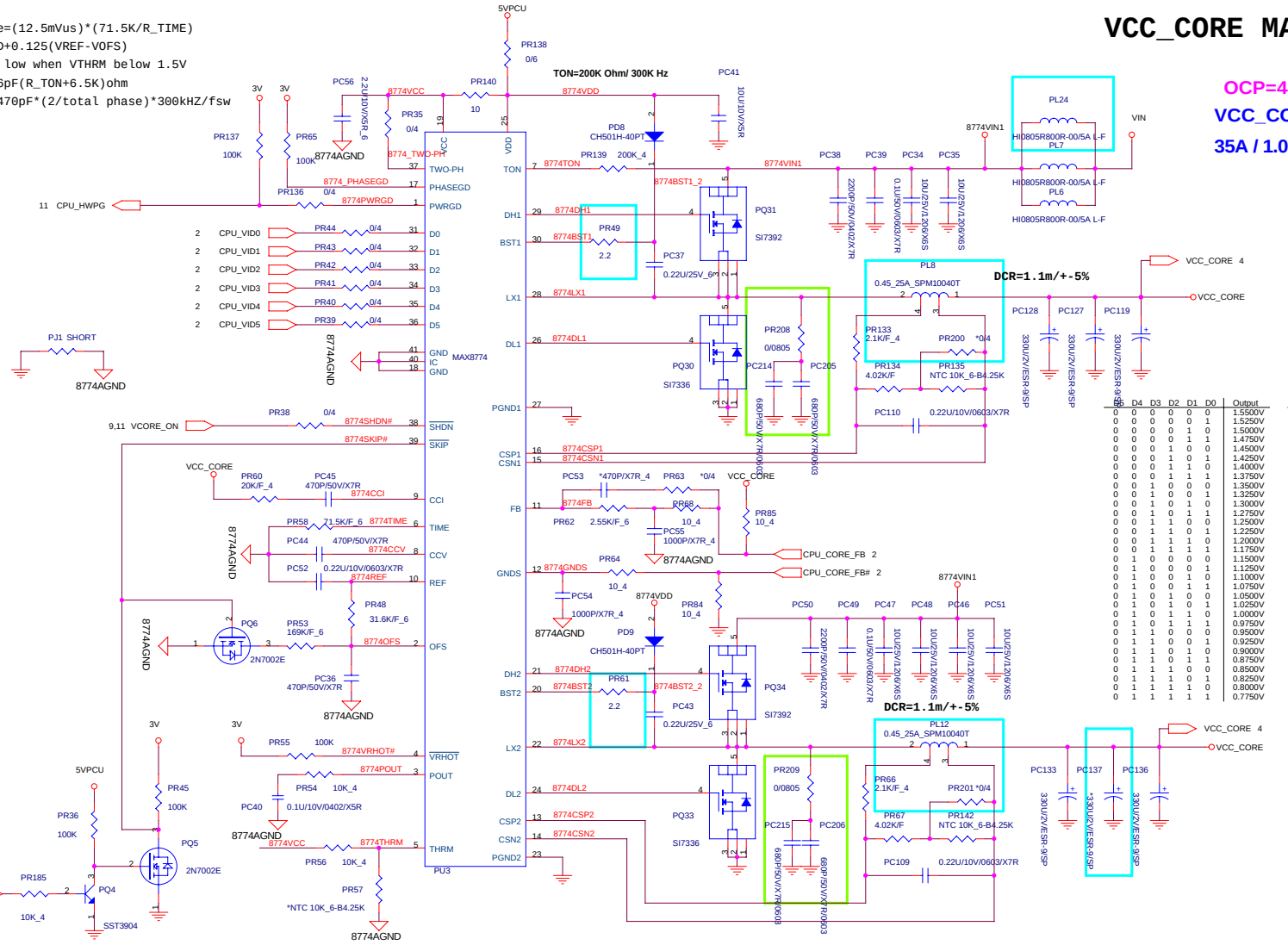

D5	D4	D3	D2	D1	D0	Output
0	0	0	0	0	0	1.5500V
0	0	0	0	0	1	1.5250V
0	0	0	0	1	0	1.5000V
0	0	0	0	1	1	1.4750V
0	0	0	1	0	0	1.4500V
0	0	0	1	0	1	1.4250V
0	0	0	1	1	0	1.4000V
0	0	0	1	1	1	1.3750V
0	0	1	0	0	0	1.3500V
0	0	1	0	0	1	1.3250V
0	0	1	0	1	0	1.3000V
0	0	1	0	1	1	1.2750V
0	0	1	1	0	0	1.2500V
0	0	1	1	0	1	1.2250V
0	0	1	1	1	0	1.2000V
0	0	1	1	1	1	1.1750V
0	1	0	0	0	0	1.1500V
0	1	0	0	0	1	1.1250V
0	1	0	0	1	0	1.1000V
0	1	0	0	1	1	1.0750V
0	1	0	1	0	0	1.0500V
0	1	0	1	0	1	1.0250V
0	1	0	1	1	0	1.0000V
0	1	0	1	1	1	0.9750V
0	1	1	0	0	0	0.9500V
0	1	1	0	0	1	0.9250V
0	1	1	0	1	0	0.9000V
0	1	1	0	1	1	0.8750V
0	1	1	1	0	0	0.8500V
0	1	1	1	0	1	0.8250V
0	1	1	1	1	0	0.8000V
0	1	1	1	1	1	0.7750V

D5	D4	D3	D2	D1	D0	Output
1	0	0	0	0	0	0.7625V
1	0	0	0	0	1	0.7500V
1	0	0	0	1	0	0.7375V
1	0	0	0	1	1	0.7250V
1	0	0	1	0	0	0.7125V
1	0	0	1	0	1	0.7000V
1	0	0	1	1	0	0.6875V
1	0	0	1	1	1	0.6750V
1	0	1	0	0	0	0.6625V
1	0	1	0	0	1	0.6500V
1	0	1	0	1	0	0.6375V
1	0	1	0	1	1	0.6250V
1	0	1	1	0	0	0.6125V
1	0	1	1	0	1	0.6000V
1	0	1	1	1	0	0.5875V
1	0	1	1	1	1	0.5750V
1	1	0	0	0	0	0.5625V
1	1	0	0	0	1	0.5500V
1	1	0	0	1	0	0.5375V
1	1	0	0	1	1	0.5250V
1	1	0	1	0	0	0.5125V
1	1	0	1	0	1	0.5000V
1	1	0	1	1	0	0.4875V
1	1	0	1	1	1	0.4750V
1	1	1	0	0	0	0.4625V
1	1	1	0	0	1	0.4500V
1	1	1	0	1	0	0.4375V
1	1	1	0	1	1	0.4250V
1	1	1	1	0	0	0.4125V
1	1	1	1	0	1	0.4000V
1	1	1	1	1	0	0.3875V
1	1	1	1	1	1	0.3750V

PROJECT : TT8
Quanta Computer Inc.

Size	Document Number	Rev
Custom	MAX8774 VCC_CORE	1A

Date: Friday, November 24, 2006 | Sheet 32 of 36

NB5/RD2/HW1

MODEL	DB1 --->SI1	CHANGE LIST	Model / Page	OT1 MB BOARD FROM	OT1 MB BOARD TO
TT8 MB 31TT8MB0006	4/17-4/20	1.Change Audio port and senser pin resistor.	1	1A	
		Internal MIC change from Pin14,15 to Pin16,17 Docking Mic Change from Pin16,17 to Pin14,15	2	1A	
		Docking spk change from Pin23,24 to Pin 43,44 Swap Pin30 and Pin31	3	1A	
		Change R486 from Pin 13 to Pin 34 and change from 5.1KK to 10K Change R251 10K to R485 5.1K	4	1A	
		2.Change WWAN and WLAN Pin define Add R487 and R488	5	1A	
		3.Change TEMP Control chip for leakage, Change Q9 and Q10 to BAM70020074	6	1A	
		4.Change HDD connector type, RJ45/CRT connector footprint	7	1A	
		5.Swap LCD connector singnal from machine require	8	1A	
		6.Swap U5 CRT/TV singnal from nVIDIA require	9	1A	
		7.Change battery and D30 footprint	10	1A	
		8.Change C251,C242,C138,C66,C71,C276,C277 footprint from 0603 to 0402	11	1A	
		9.Add Q36,Q37,R489,C661,R490 for Docking MIC detect	12	1A	
		10.Change SW5 and CN8 footprint for machinecal request	13	1A	
		11.Change L41 to PBY201209T-300Y-N (Footprint : 0805)	14	1A	
		12.Delect H3 and H4 for machinecal change	15	1A	
		13.Change C20 from 0.1U to 1U (Fix LCD rise time)	16	1A	
		14.Move Net "SLP_BTN# from pin99 to pin87	17	1A	
		15.Modify Docking mute LED circuit	18	1A	
		16.Modify U25 SCI# signal from BIOS request, AddR491,R492	19	1A	
		17.Modify Buletooth switch and ODD BAYINS# to EC	20	1A	
		18.Change caps lock connector footprint from machencal request	21	1A	
		19.Add U30,R495,R494,R493,Q38 for reserve SIM card	22	1A	
		20.Change 4-in-1 card footprint	23	1A	
		21.Add R44,R43,R48 Remove R62,R64,R69,R34,R24,R36	24	1A	
		22.Change L45,L46,L47 to 0 ohm Del C503,C504,C505,C493,C494,C495 for D-SUB function	25	1A	
			26	1A	
			27	1A	
			28	1A	
			29	1A	
			30	1A	
			31	1A	
			32	1A	
			33	1A	

NB5/RD2/HW1

PROJECT : TT8
Quanta Computer Inc.

Size	Document Number	Rev
Custom	--> SI** Change history	1A

Date: Friday, November 24, 2006 Sheet 33 of 36

MODEL	SI1 --->PV1	CHANGE LIST	Model / Page	OT1 MB BOARD FROM	TO
TT8 MB 31TT8MB0006	5/17-7/11	1.Exchange Audio port	1	1A	
		External MIC Exchange Pin22 and Pin21 CD Line Exchange Pin18 and Pin20	2	1A	
		Internal MIC Exchange Pin16 and Pin17 Docking Mic Exchange Pin14 and Pin15	3	1A	
		3.Change R478 from 22ohm to 0ohm	4	1A	
		4.Change R462 0ohm to C666 0.47u for Audio chip distortion	5	1A	
		5.Exchange R272 and R263, R273 and R264 for amplifier gain change	6	1A	
		6.Change Q8 from BAM51030Z15 to BAM23010Z30 for Rdson issue	7	1A	
		7.Remove C439 for MS pro card can not detect	8	1A	
		8.Add C667,C668,C669,C670,C671,C672,C673,C674,C675,C676 for WLAN con not detect issue	9	1A	
		9.Add reverse circuit for LED issue	10	1A	
		10.Delect Q7 for Cap lock LED	11	1A	
		11.Add EMI Cap C93,C118,C496,C497,C499,C566,C589,C555,C334,C337	12	1A	
		12.Change CN19,CN27,CN28,CN29 footprint	13	1A	
		14.Change Sim connector (Add detect pin)	14	1A	
		15.Move Docking CRT signal after PI circuit	15	1A	
		16.Add R500, R501 for Audio chip function	16	1A	
		17.Add D37 and R502 for nVIDIA soluction	17	1A	
		18.Move D22 from +5VCRT to +5VCRT3	18	1A	
		19.Change Docking detect circuit	19	1A	
		20.Delet H20 H21	20	1A	
		21.Exchange MINI_DATA and MINI_CLK	21	1A	
		22.Add Diode for SATA and ODD LED control	22	1A	
		23.Add power controller for 5V shutdown	23	1A	
		24.Change WLAN LED circuit	24	1A	
		25.Add Res for ACZ signal	25	1A	
		26.Delete H7 and H14 for ME change	26	1A	
		27.Modify SB to Audio and Modem signal	27	1A	
			28	1A	
			29	1A	
			30	1A	
			31	1A	
			32	1A	
			33	1A	

MODEL		CHANGE LIST	Model / Page	OT1 MB BOARD FROM	OT1 MB BOARD TO
TT8 MB 31TT8MB0006	PV1 --->PV2 9/8-10/17	1.Page17 change voltage from +3V to 3V fix the Mic can not work	1	1A	
		2.Page17 change R14 from 4.7K to 5.6K to fix LCCVDD rise time	2	1A	
		3.Page17 change LCD cable Pin22 and Pin15 for switch function, Pin7 change to 32K_BTN	3	1A	
		4.Page24 add GPIO for switch function	4	1A	
		5.Page10 Change cap from 18p to 22p	5	1A	
		6.Page17 Change C392 and C395 from 10U to 1U to fix Docking noise	6	1A	
		7.Page16 add PA11(EMI spring)	7	1A	
		8.Page21 Exchange BBC0EX1 and BBC0EX2	8	1A	
		9.Page20 remove C614, C607, C406, C414, C404, C405	9	1A	
		10.Page20 Change C635, C415, C416 from TAN to ELEC	10	1A	
		11.Page11 Del R205 and Add R207 for Bios check	11	1A	
			12	1A	
			13	1A	
			14	1A	
			15	1A	
			16	1A	
			17	1A	
			18	1A	
			19	1A	
			20	1A	
			21	1A	
			22	1A	
			23	1A	
			24	1A	
			25	1A	
			26	1A	
			27	1A	
			28	1A	
			29	1A	
			30	1A	
			31	1A	
			32	1A	
			33	1A	

MODEL		CHANGE LIST	Model / Page	OT1 MB BOARD FROM	TO
TT8 MB 31TT8MB0006	PV2 --->MV1 10/17-11/15	1.Page10 Exchange USB0+/- with USB3+/- signal	1	1A	
		2.Page12 Change CN12 Pin1 from 5VSUS to 3V	2	1A	
		3.Page17 Change C648 and C656 from 4.7U to 22U to fix Vista issue	3	1A	
		4.Page19 Change L35~L38 from LZA10-2ACB104MT to BK1608HS241-T	4	1A	
		5.Page19 Change Gain from 15.6db to 10db	5	1A	
		6.Page17 Del R260,R267,D312,D322 for Docking MIC	6	1A	
		7.Page17 ADD R520,R521,R522,R523 for Docking MIC	7	1A	
		8.Page21 Change PR51 PR52 from 100ohm to 330ohm to fix ESD issue	8	1A	
		9.Page20 unstuff R188 to fix ODD problem	9	1A	
		10.Page11 Change the board ID1 from low to high	10	1A	
		11.Page15 Change Cap (C60,C56,C441,C44,C45)from 0.1u to 1u	11	1A	
		12.Page15 Change Res (R318,R313,R312)from 39K to 10K	12	1A	
		13.Page17 Add 0.01u(C693, C694) to fix high frequency problem	13	1A	
		14.Page14 remove the cap(C408,C409) from MV build	14	1A	
		15.Page7 Reserve C696 for nVIDIA	15	1A	
		16.Page15 Reserve R525 and C695 for 3VSUS drop	16	1A	
		17.Page23 Change LED4 for ME requests	17	1A	
			18	1A	
			19	1A	
			20	1A	
			21	1A	
			22	1A	
			23	1A	
			24	1A	
			25	1A	
			26	1A	
			27	1A	
			28	1A	
			29	1A	
			30	1A	
			31	1A	
			32	1A	
			33	1A	