ZO3 SYSTEM BLOCK DIAGRAM

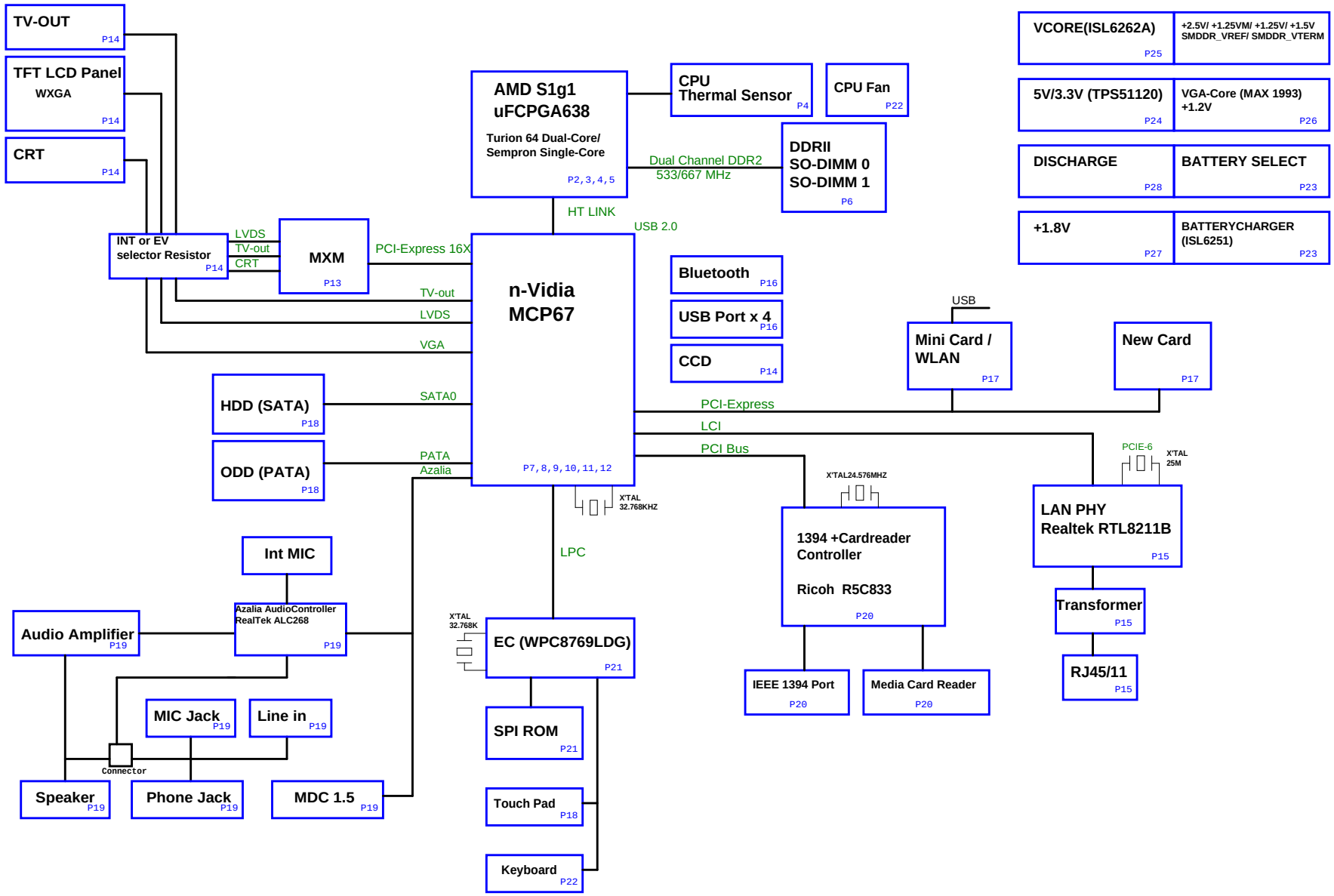

PROJECT : ZO3
Quanta Computer Inc.

Size	Document Number	Rev
	Block Diagram	1A

Date: Tuesday, December 19, 2006 Sheet 1 of 30

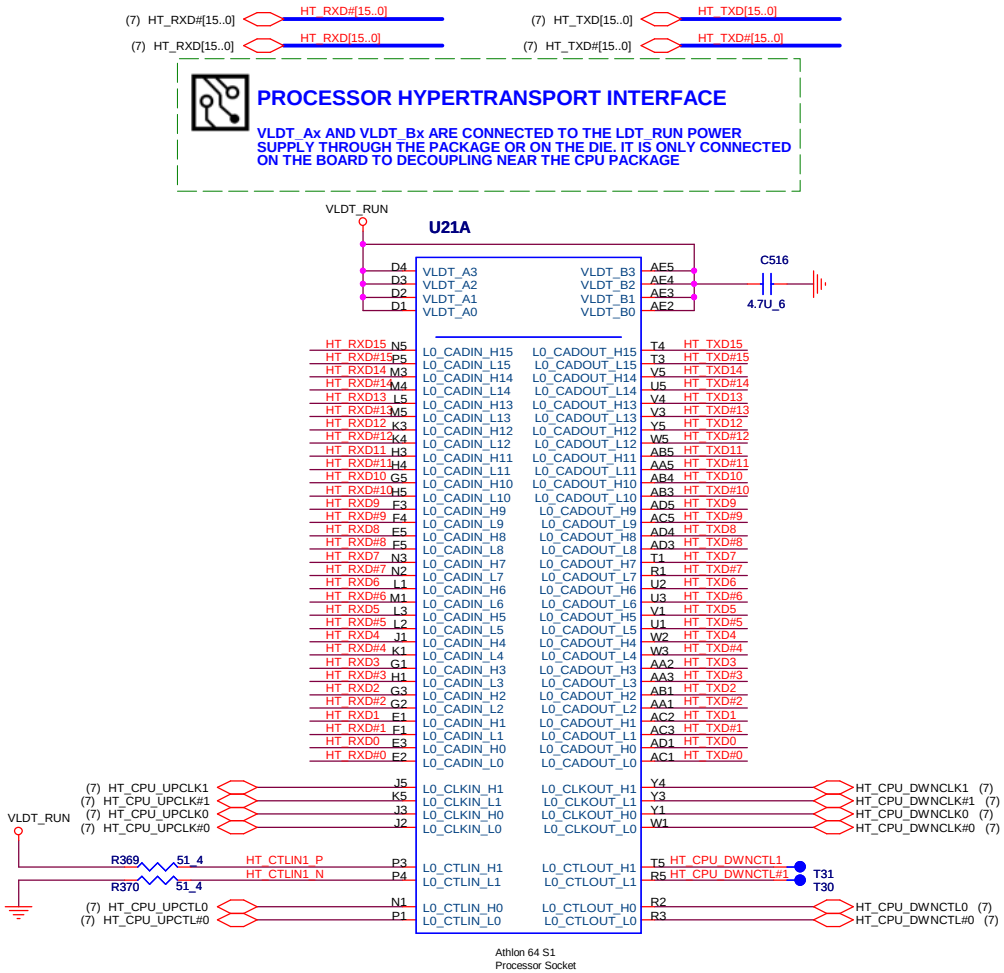

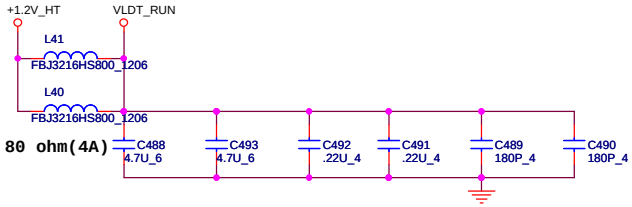

LAYOUT: Place bypass cap on topside of board

NEAR HT POWER PINS THAT ARE NOT CONNECTED DIRECTLY TO DOWNSTREAM HT DEVICE, BUT CONNECTED INTERNALLY TO OTHER HT POWER PINS
PLACE CLOSE TO VLDT0 POWER PINS

PROJECT : ZO3
Quanta Computer Inc.

Size	Document Number	Rev
	ATHLON64 HT I/F	1A

Date: Tuesday, December 19, 2006 Sheet 2 of 30

Processor DDR2 Memory Interface

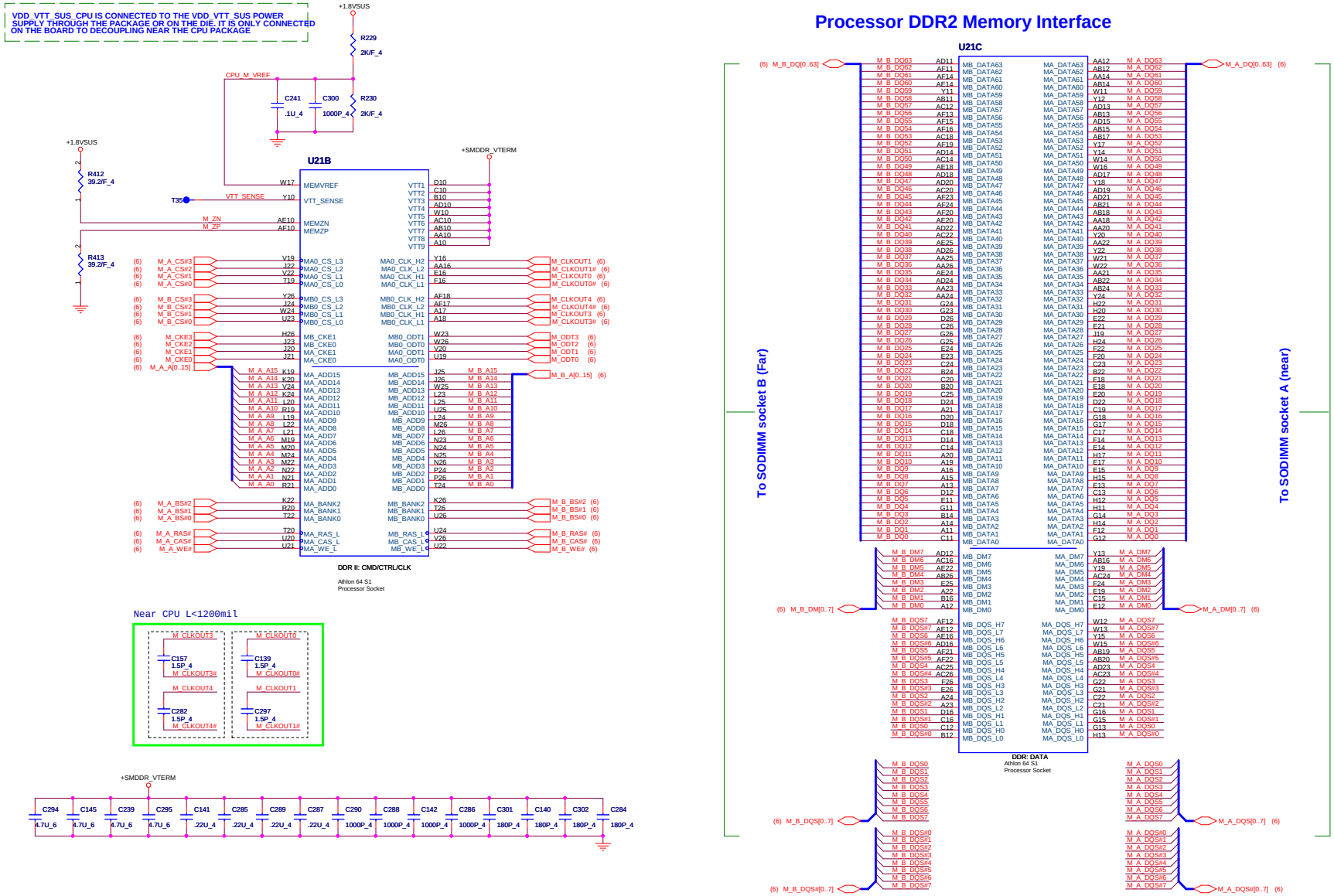

PROJECT : ZO3
Quanta Computer Inc.

Size	Document Number	Rev
	ATHLON64 DDRII MEMORY I/F	1A

Date: Tuesday, December 19, 2006 Sheet 3 of 30

ATHLON Control and Debug

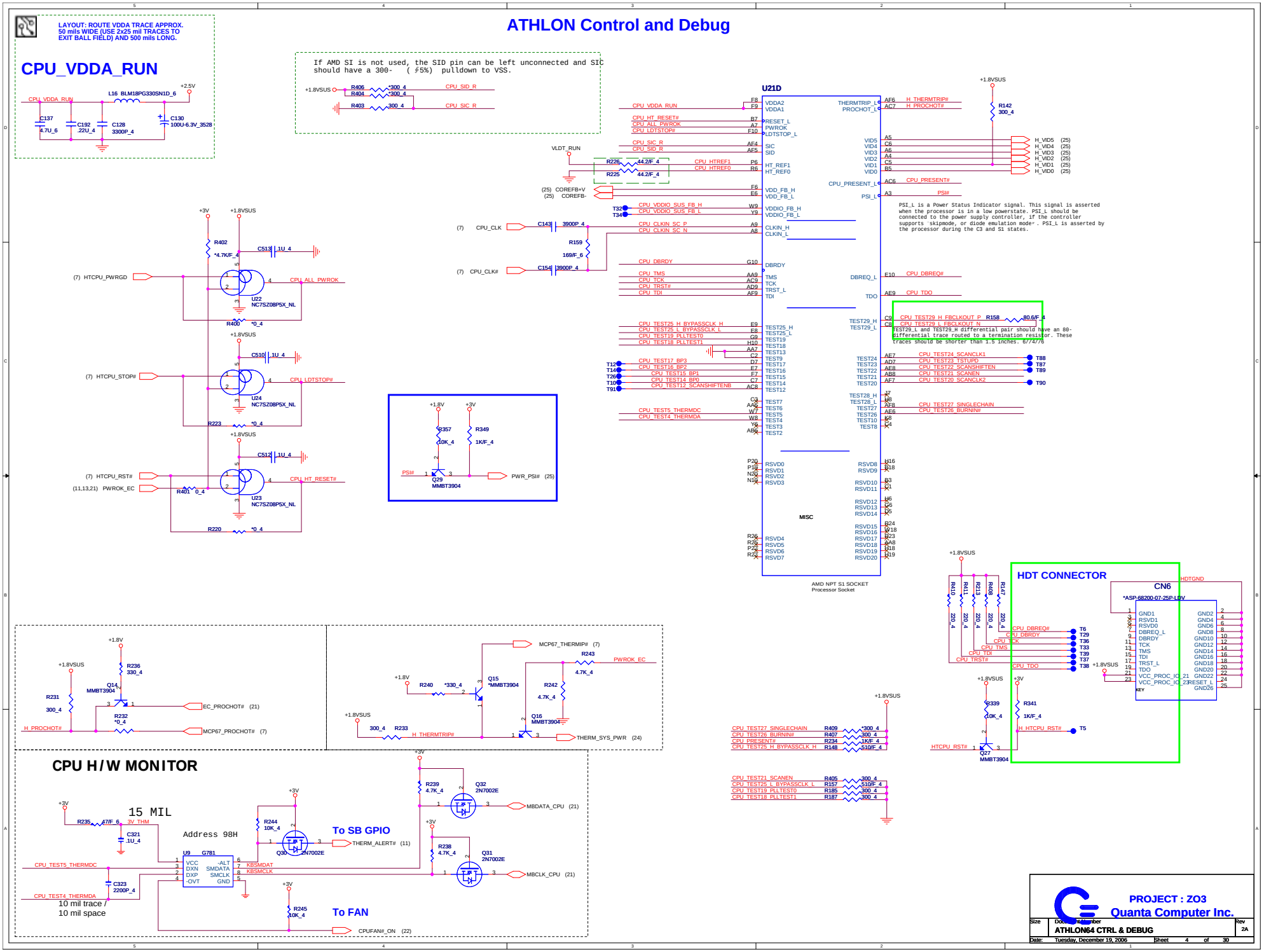

PROCESSOR POWER AND GROUND

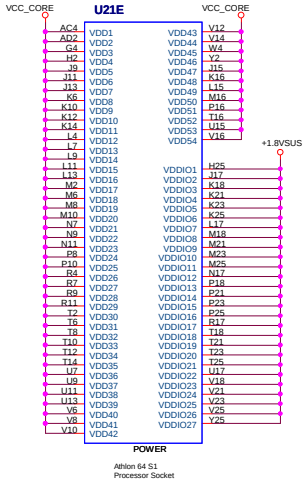

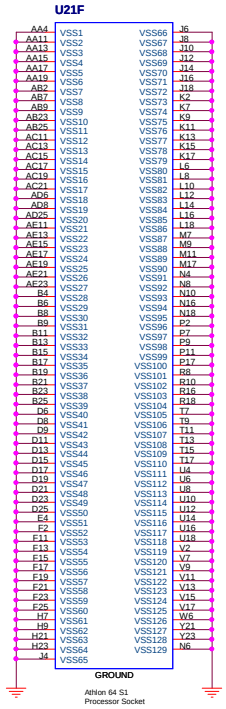

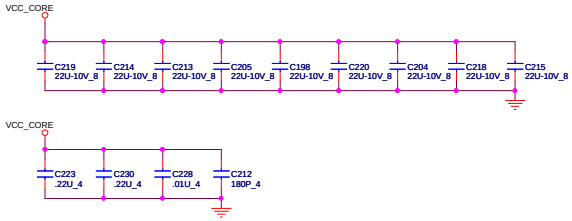

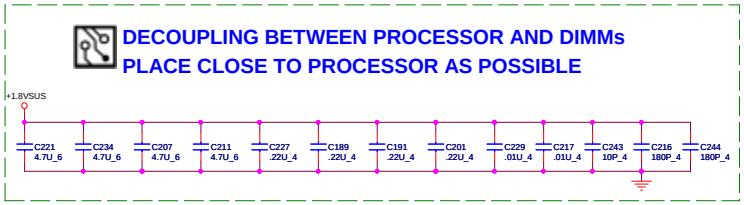

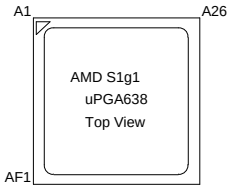

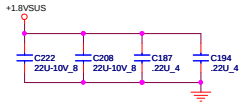

PROJECT : ZO3
Quanta Computer Inc.

Size	Document Number	Rev
	ATHLON64 PWR & GND	1A

Date: Tuesday, December 19, 2006 Sheet 5 of 30

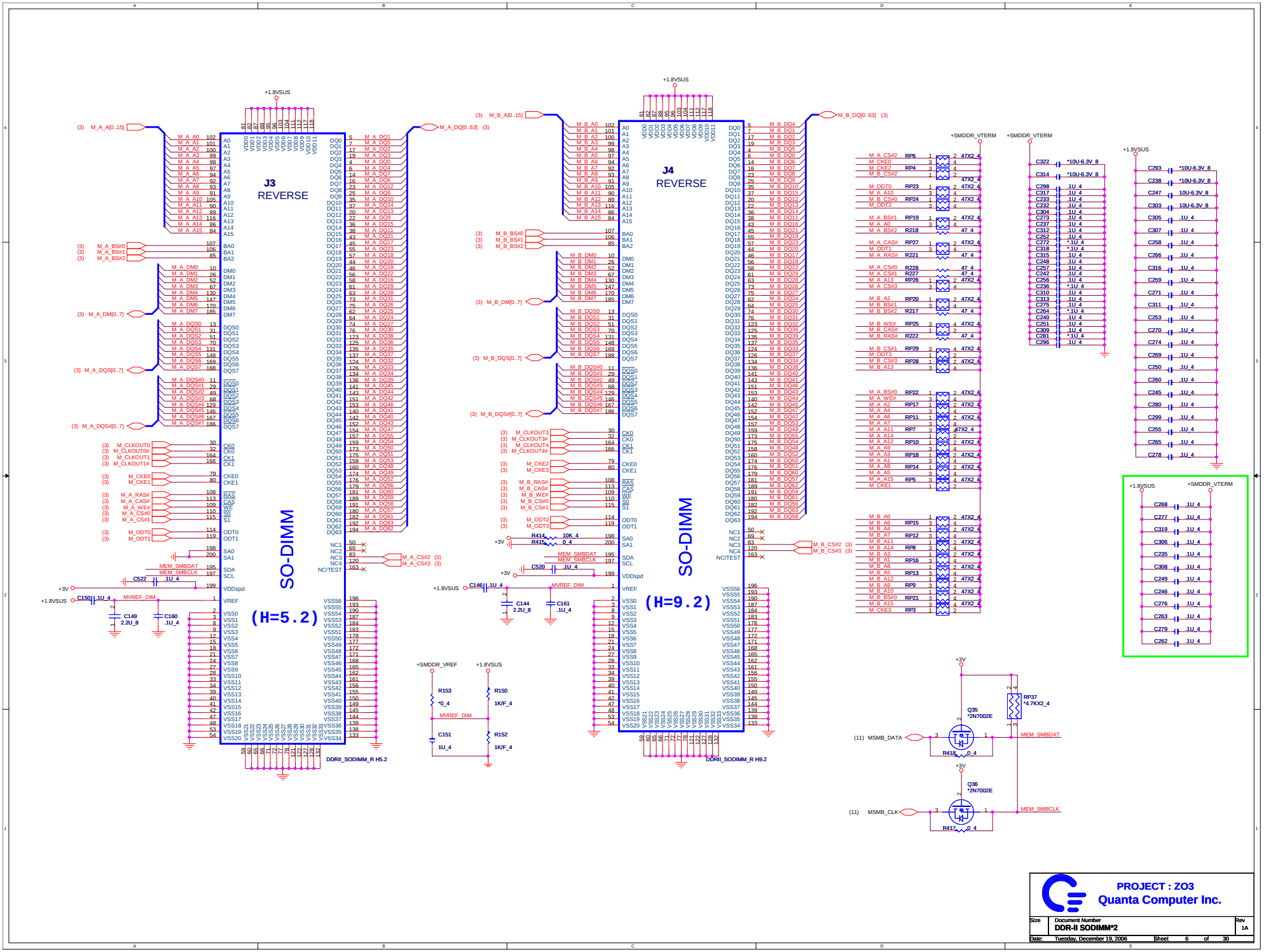

MCP67 Used UMA Only	
MCP67 Signal Name	**Component**
RGB_DAC_RSET RGB_DAC_VREF DDC_DATA0	STUFF STUFF *10K LEAVE NC
TV_DAC_RSET TV_DAC_VREF	STUFF STUFF
IFPAB_RST IFPAB_VPROBE DDC_DATA2 HPLUG_DET3	STUFF STUFF *10K LEAVE NC 22K PULLDOWN
HDMI_RSET HDMI_VPROBE DDC_DATA3_R HDCP_ROM_SDATA HPLUG_DET2_R	STUFF STUFF 10K PULLHIGH 10K PULLHIGH 6.2K PULLDOWN

MCP67 Unused UMA Only	
MCP67 Signal Name	**Component**
RGB_DAC_RSET RGB_DAC_VREF DDC_DATA0	STUFF STUFF 10K PULLHIGH
TV_DAC_RSET TV_DAC_VREF	STUFF STUFF
IFPAB_RST IFPAB_VPROBE DDC_DATA2 HPLUG_DET3	STUFF STUFF 10K PULLHIGH 22K PULLDOWN
HDMI_RSET HDMI_VPROBE DDC_DATA3_R HDCP_ROM_SDATA HPLUG_DET2_R	STUFF STUFF 10K PULLHIGH 10K PULLHIGH 6.2K PULLDOWN

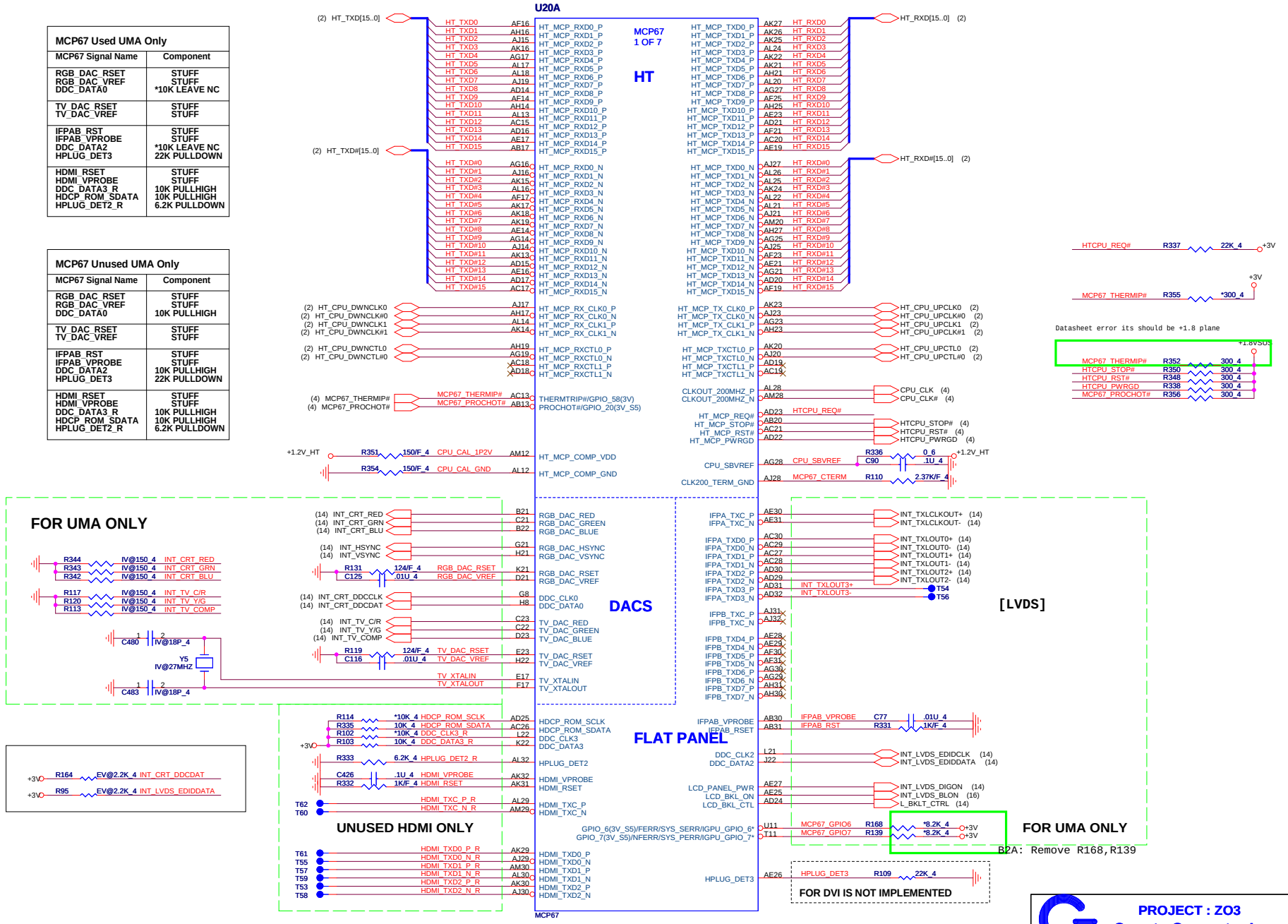

PROJECT : ZO3
Quanta Computer Inc.

Size	Document Number	Rev
	MCP67(HT/VGA/FLAT_PANEL)	1A

Date: Tuesday, December 19, 2006 Sheet 7 of 30

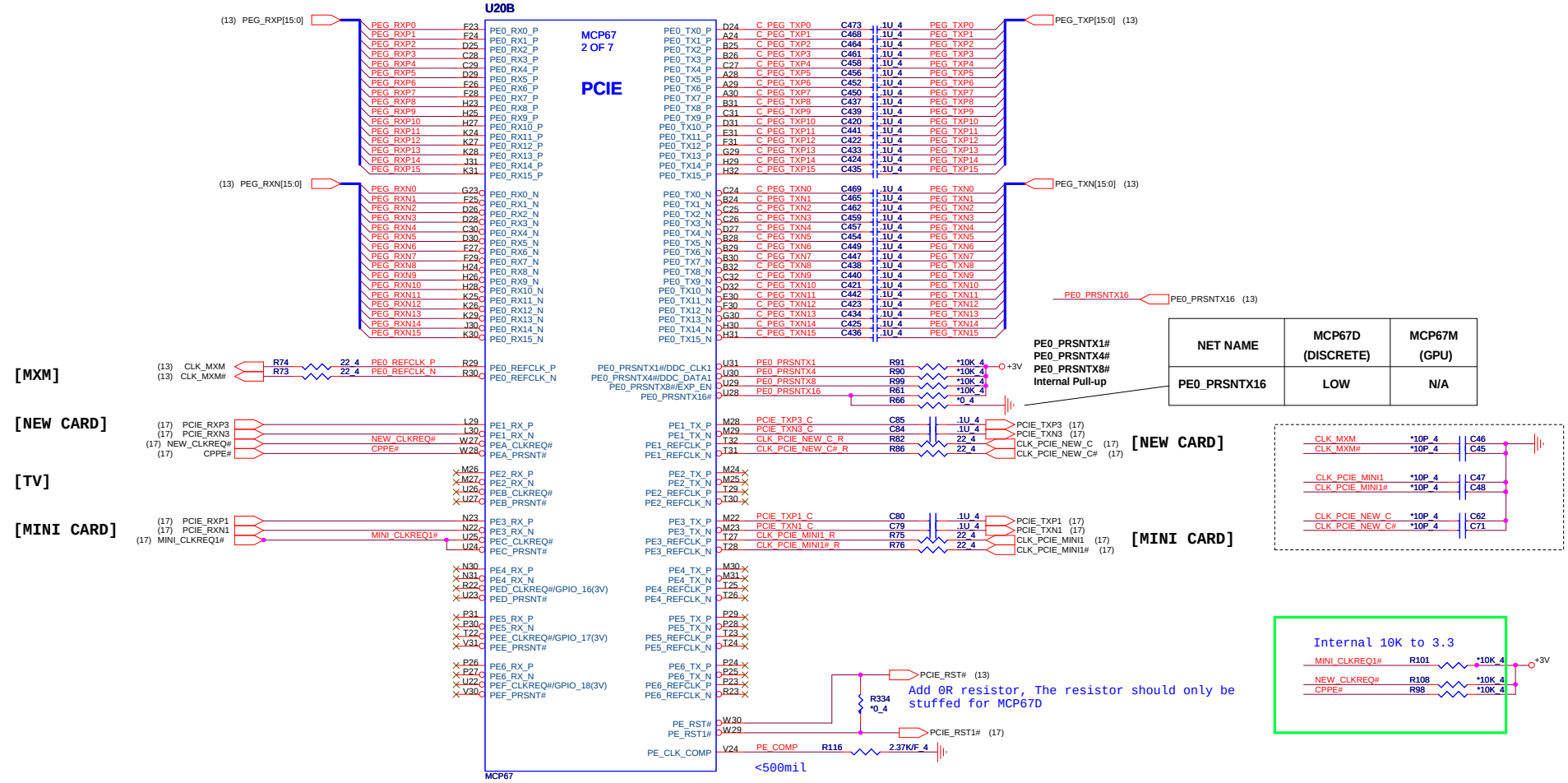

NET NAME	MCP67D (DISCRETE)	MCP67M (GPU)
PE0_PRSNTX16	LOW	N/A

PROJECT : ZO3
Quanta Computer Inc.

Size	Document Number	Rev
	MCP67(PCI-E)	1A

Date: Tuesday, December 19, 2006 Sheet 8 of 30

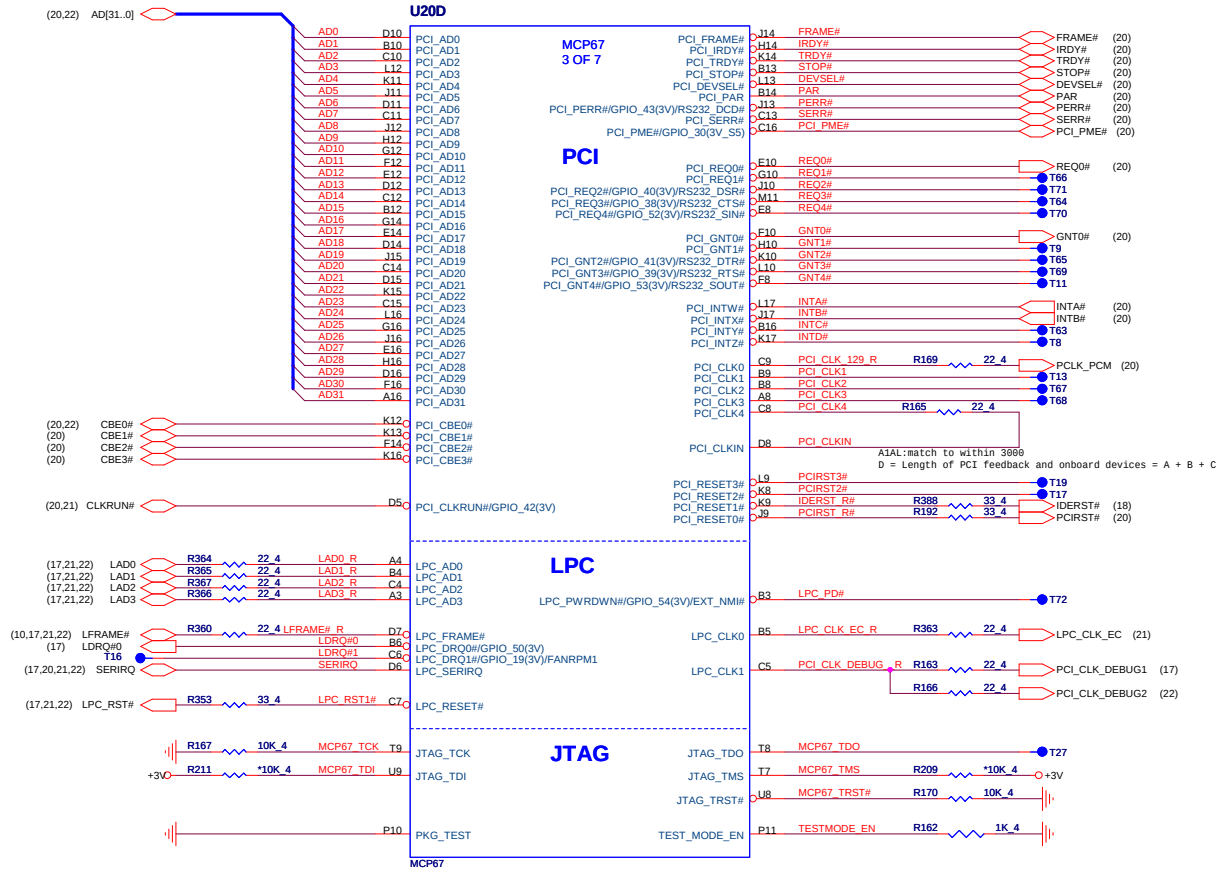

PCI/LPC PULL-UP

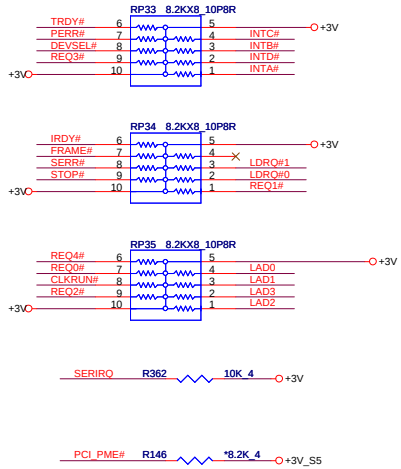

CLOCK BYPASS

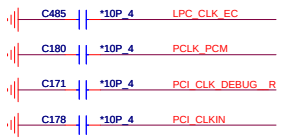

PROJECT : ZO3
Quanta Computer Inc.

Size	Document Number	Rev
	MCP67(PCI/LPC/JTAG)	1A

Date: Tuesday, December 19, 2006 Sheet 9 of 30

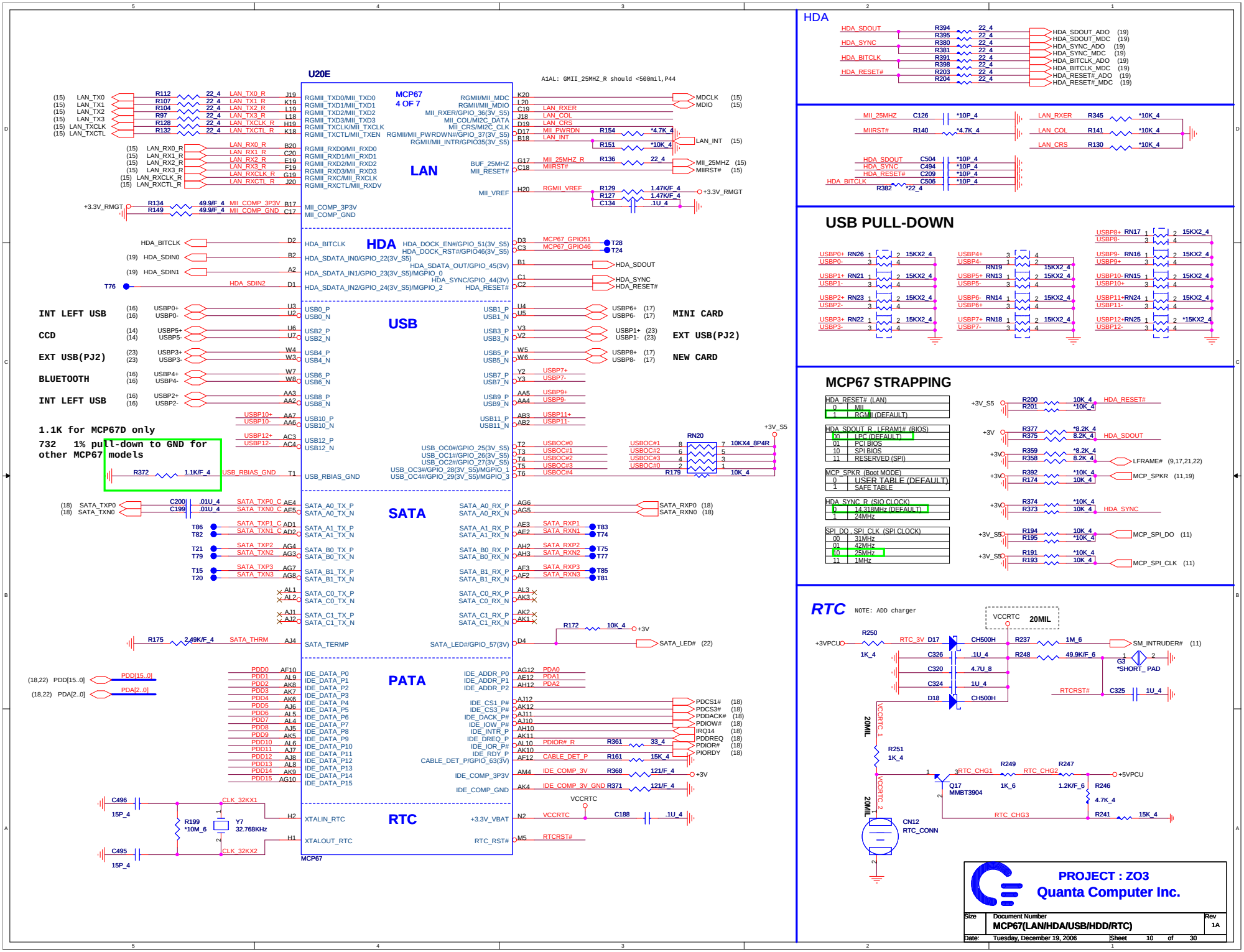

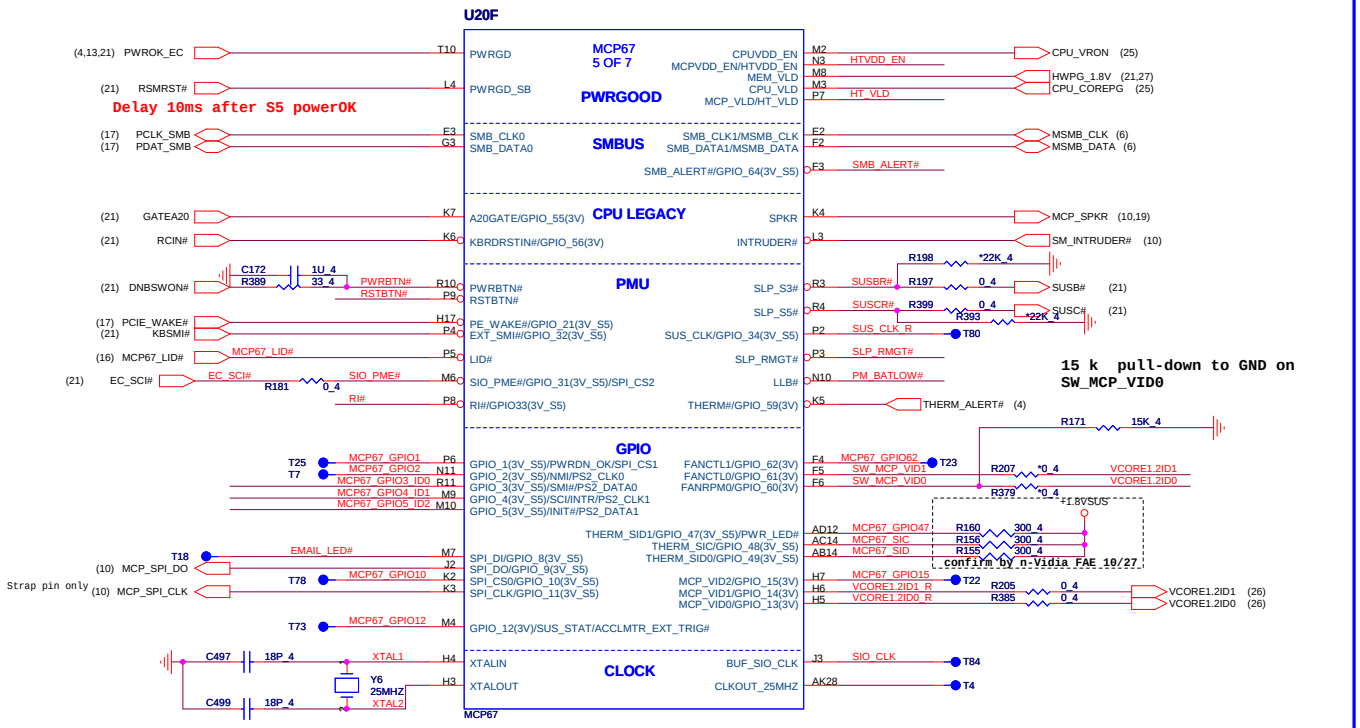

FOR SLEEP MODE CORE POWER CIRCIUT

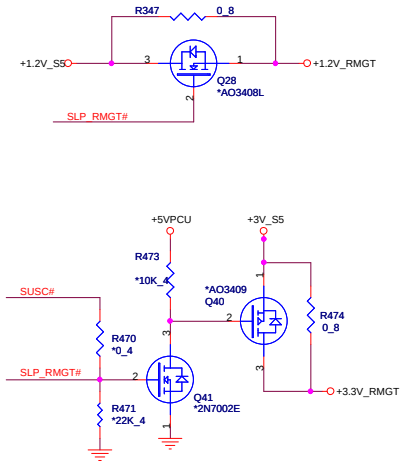

CPU LEGACY PULL-UP

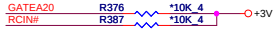

SMB/I2C PULL-UP

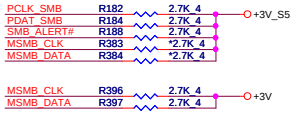

PMU PULL-UP

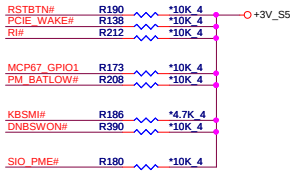

M/B ID for 14"/15"/17"

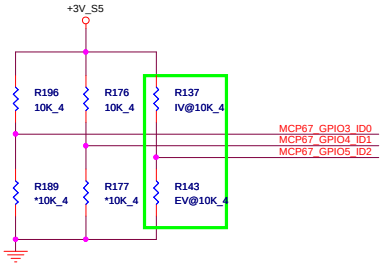

ID0	ID1	ID2	M/B
0	0	0	17" D
0	0	1	X
0	1	0	15" D
1	0	0	15" U
1	0	1	X
1	1	0	14" D
1	1	1	14" U

HyperTransport Link 1.2 V_HT Power Valid

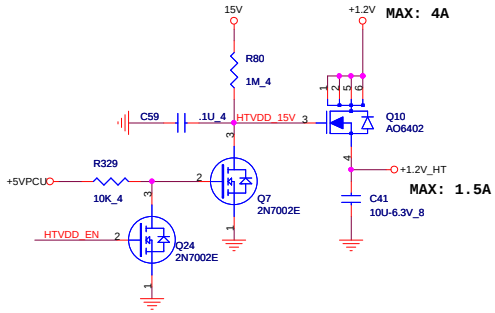

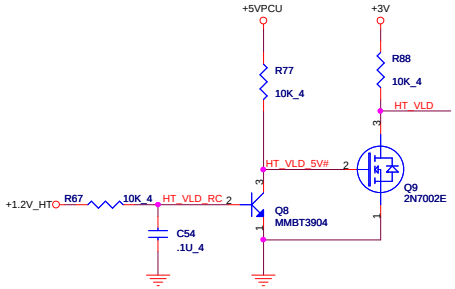

PROJECT : ZO3
Quanta Computer Inc.

Size	Document Number	Rev
	MCP67(SMB/GPIO/CLK/PMU)	1A

Date: Tuesday, December 19, 2006 Sheet 11 of 30

MCP67 POWER PLANE/GND & BYPASS

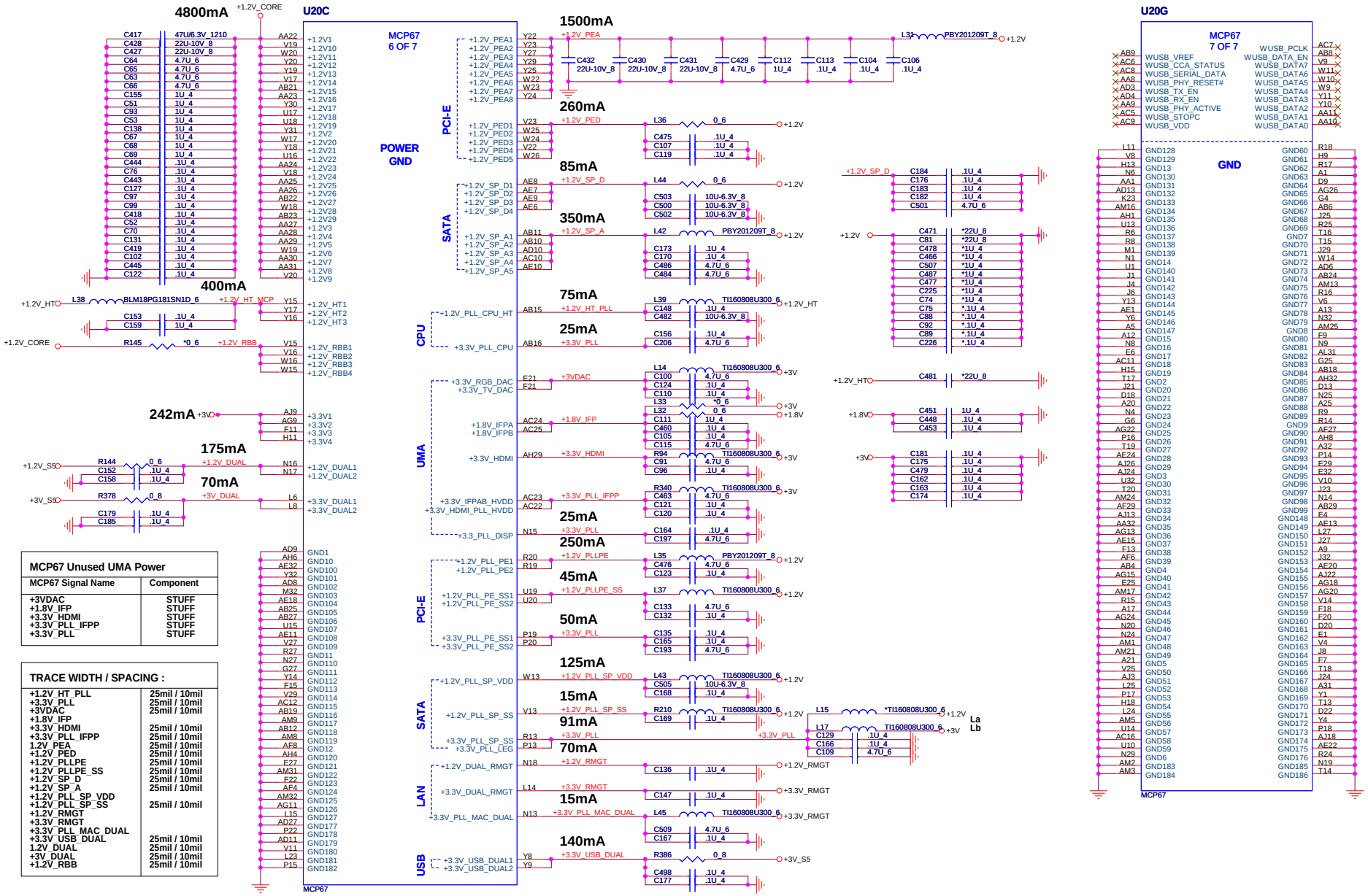

MCP67 Unused UMA Power	
MCP67 Signal Name	Component
+3VDAC	STUFF
+1.8V_IFP	STUFF
+3.3V_HDMI	STUFF
+3.3V_PLL_IFPP	STUFF
+3.3V_PLL	STUFF

TRACE WIDTH / SPACING :	
+1.2V_HT_PLL	25mil / 10mil
+3.3V_PLL	25mil / 10mil
+3VDAC	25mil / 10mil
+1.8V_IFP	
+3.3V_HDMI	25mil / 10mil
+3.3V_PLL_IFPP	25mil / 10mil
1.2V_PEA	25mil / 10mil
+1.2V_PED	25mil / 10mil
+1.2V_PLLPE	25mil / 10mil
+1.2V_PLLPE_SS	25mil / 10mil
+1.2V_SP_D	25mil / 10mil
+1.2V_SP_A	25mil / 10mil
+1.2V_PLL_SP_VDD	
+1.2V_PLL_SP_SS	25mil / 10mil
+1.2V_RMGT	
+3.3V_RMGT	
+3.3V_PLL_MAC_DUAL	
+3.3V_USB_DUAL	25mil / 10mil
1.2V_DUAL	25mil / 10mil
+3V_DUAL	25mil / 10mil
+1.2V_RBB	25mil / 10mil

PROJECT : ZO3

Quanta Computer Inc.

Size	Document Number	Rev
	MCP67(POWER/GND)	1A

Date: Tuesday, December 19, 2006 Sheet 12 of 30

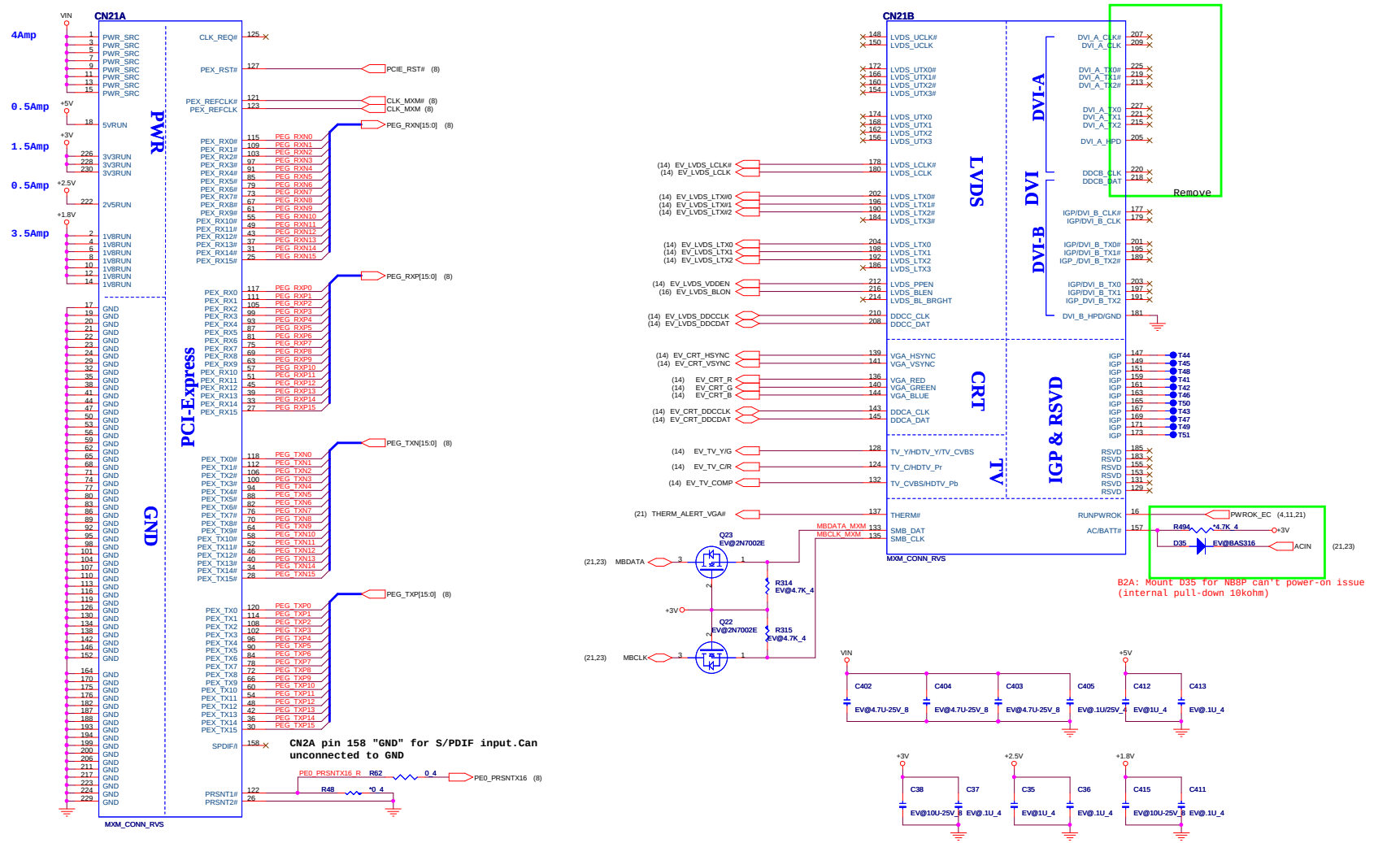

PROJECT : ZO3
Quanta Computer Inc.

Size	Document Number	Rev
	MXM	1A

Date: Tuesday, December 19, 2006 Sheet 13 of 30

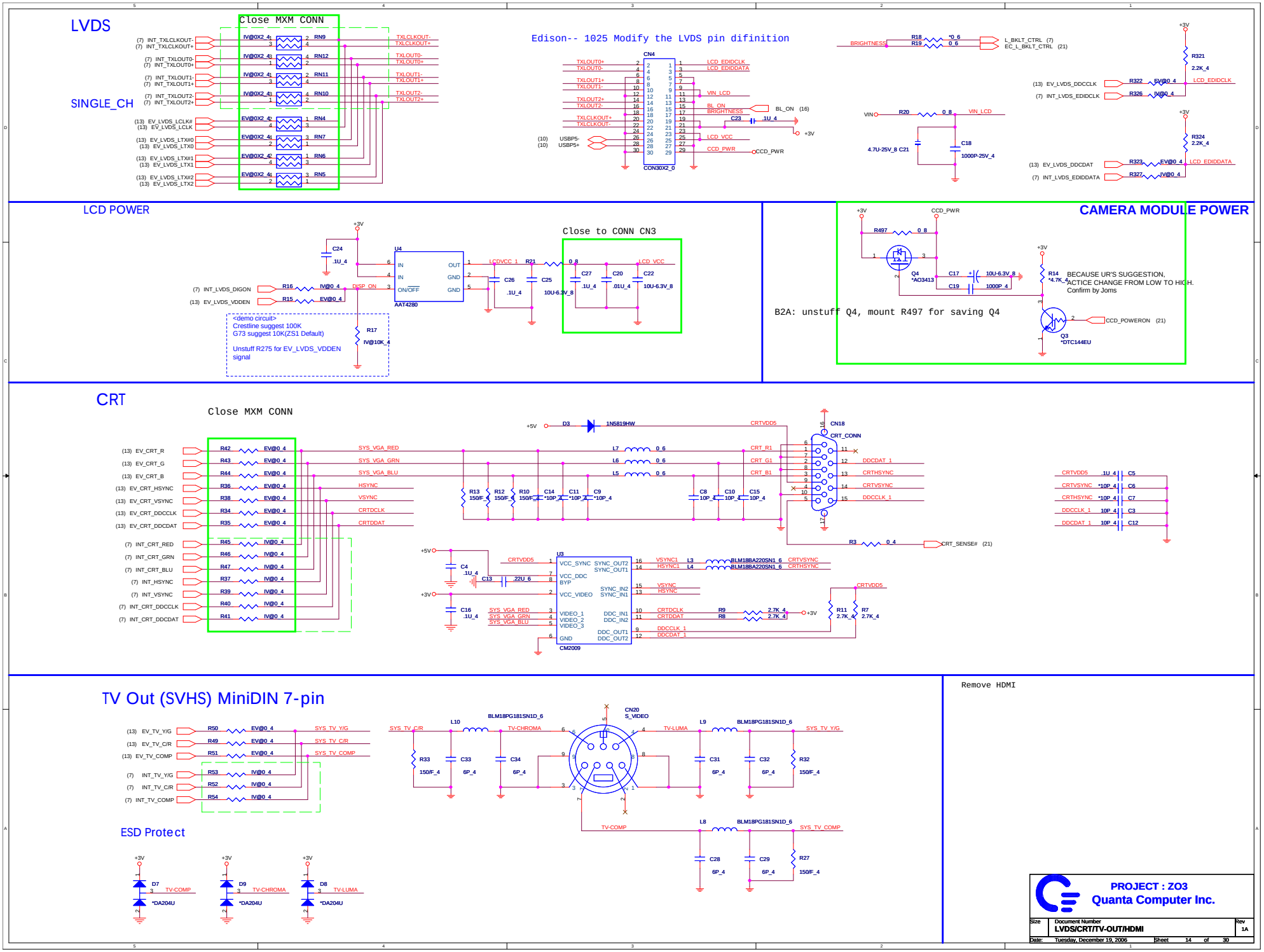

LAN

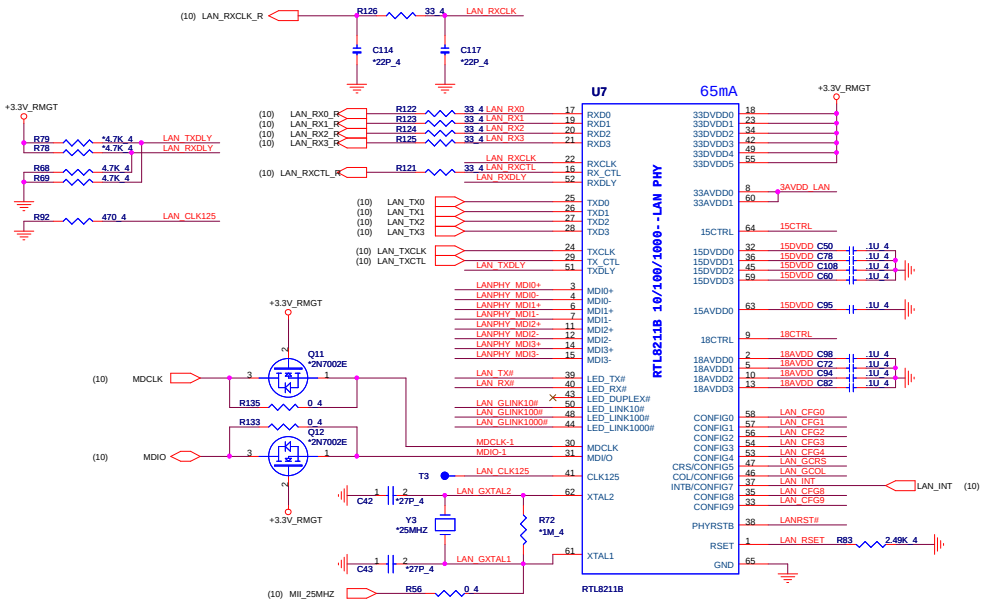

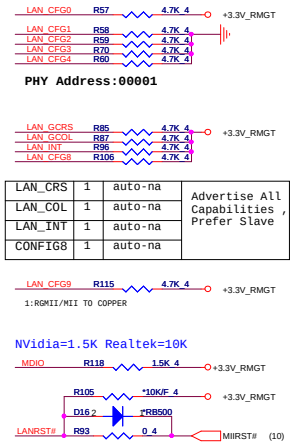

LAN_CRS	1	auto-na	Advertise All Capabilities , Prefer Slave
LAN_COL	1	auto-na	
LAN_INT	1	auto-na	
CONFIG8	1	auto-na	

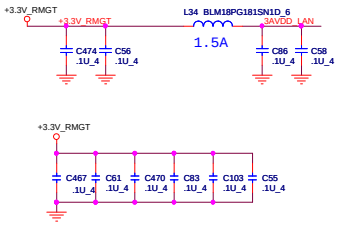

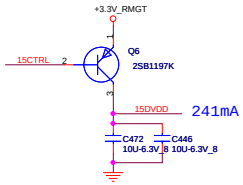

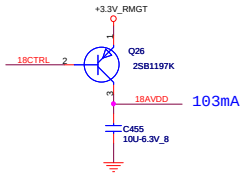

RJ45-11

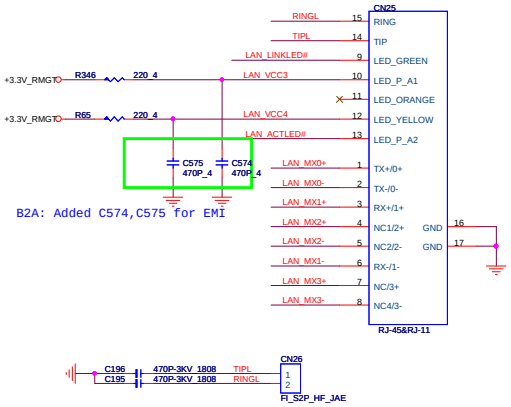

Transformer

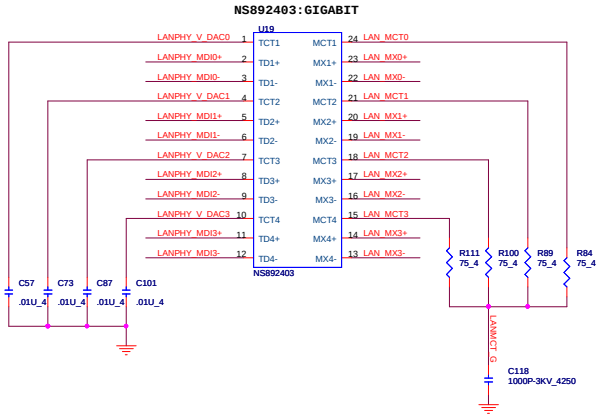

LED Configuration

	Set Register 24 Control Bit=1
LED_LINK1000	LOW=LINK UP (ANY SPEED)
LED_TX	BLINKING=TRANSMITTING OR RECEIVING

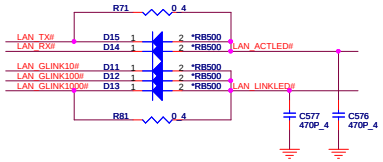

PROJECT : ZO3
Quanta Computer Inc.

Size	Document Number	Rev
	RTL8211B (GigaLAN)	1A

Date: Tuesday, December 19, 2006 Sheet 15 of 30

USB MB port

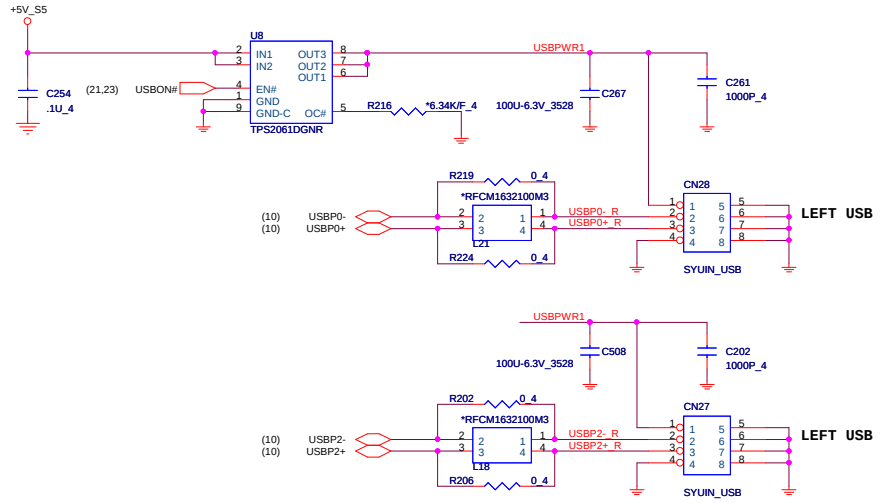

LID SWITCH

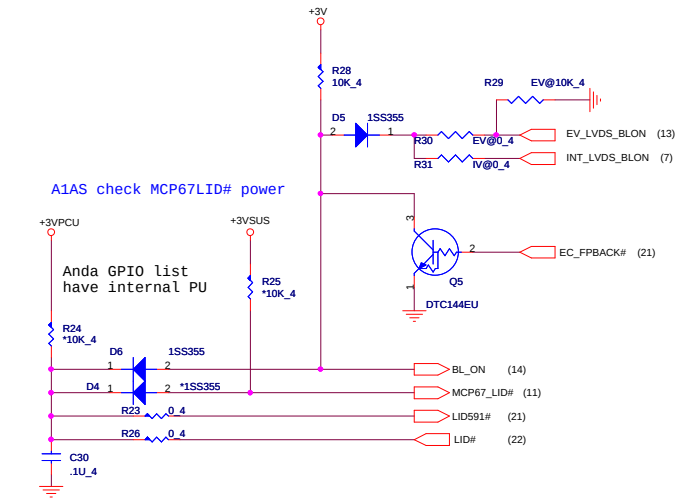

CPU

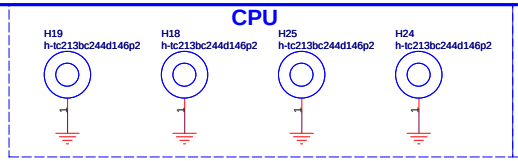

MDC

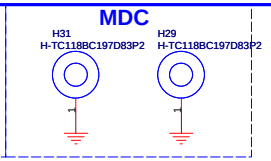

CIR

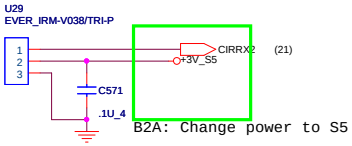

MXM

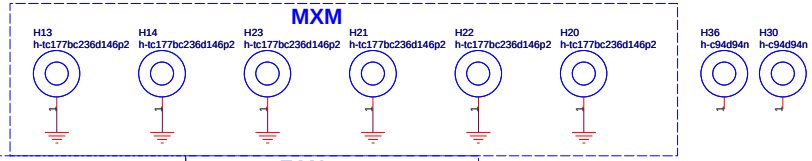

MINI Card

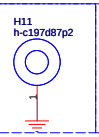

FAN

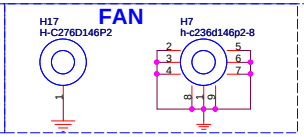

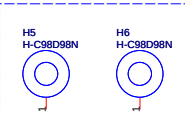

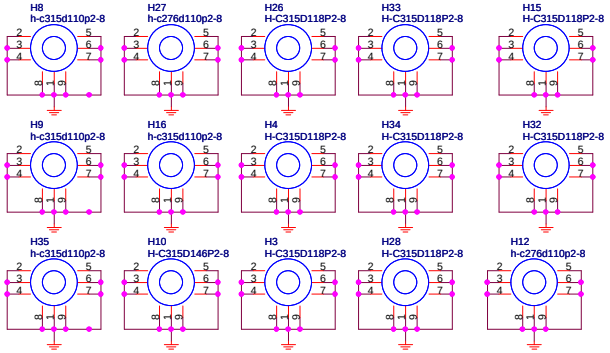

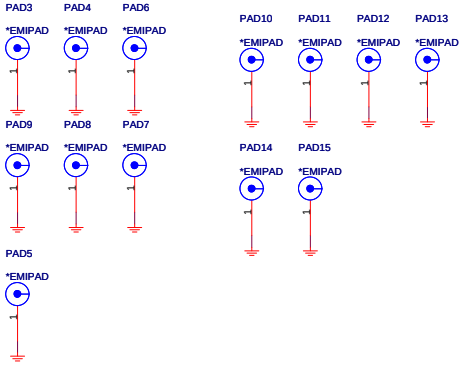

BLUETOOTH MODULE CONNECTOR

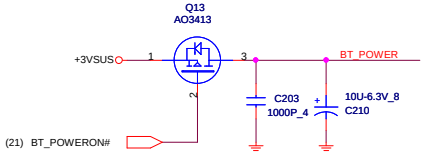

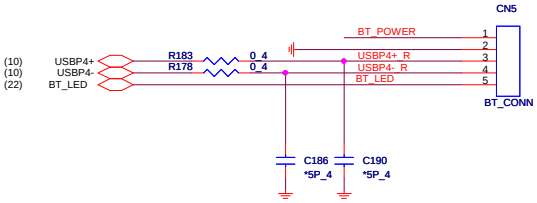

PROJECT : ZO3
Quanta Computer Inc.

Size	Document Number	Rev
	USB/BLUETOOTH/CCD/CIR	1A

Date: Tuesday, December 19, 2006 Sheet 16 of 30

MINI-Card

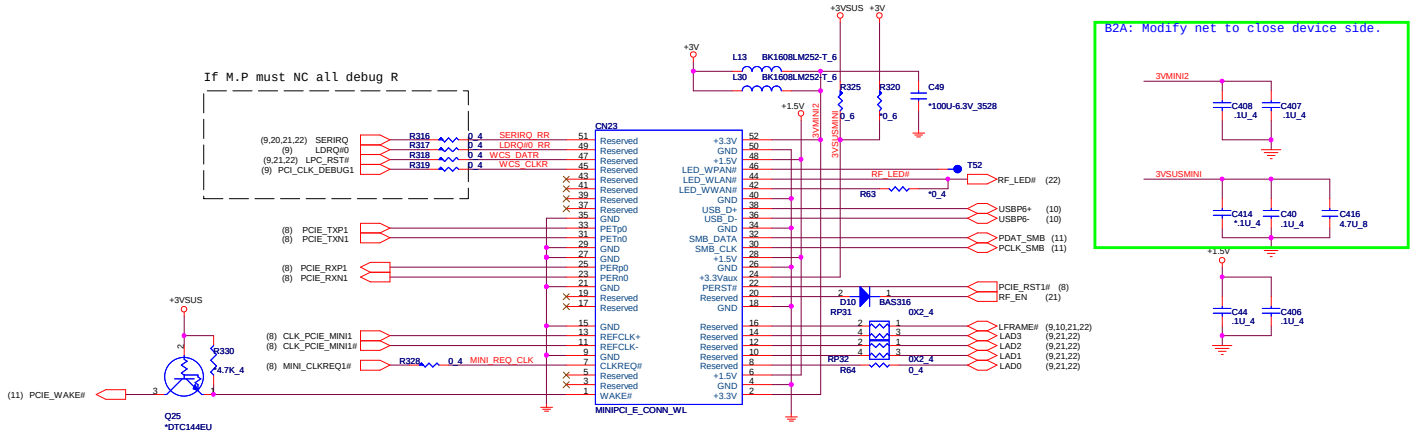

Need reserve 3G pin define
Check Footprint

New card

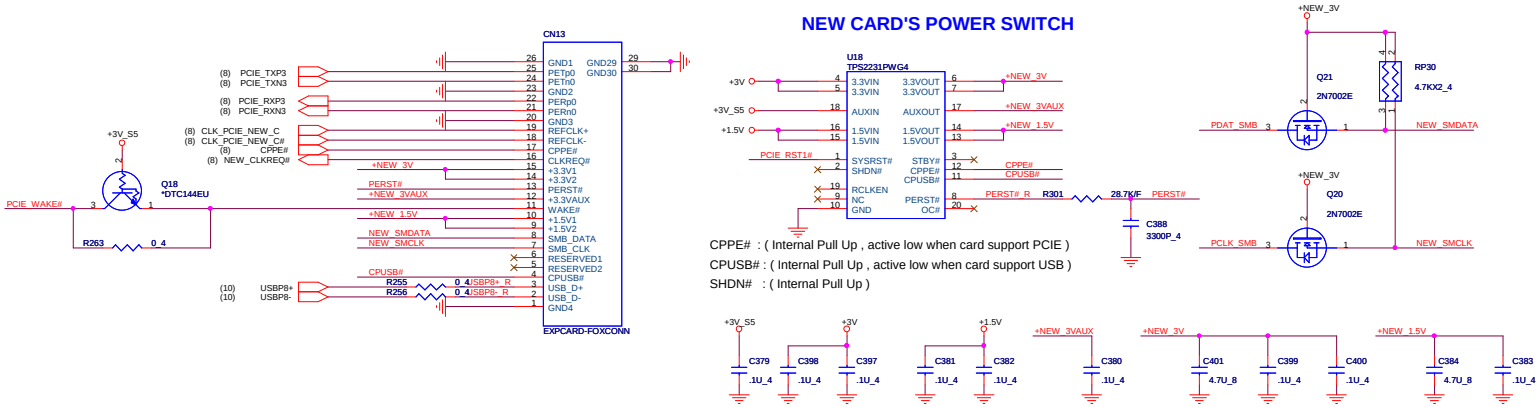

PROJECT : ZO3
Quanta Computer Inc.

Size	Document Number	Rev
	MINI PCI-E card & NEW CARD	1A

Date: Tuesday, December 19, 2006 Sheet 17 of 30

SATA HDD1

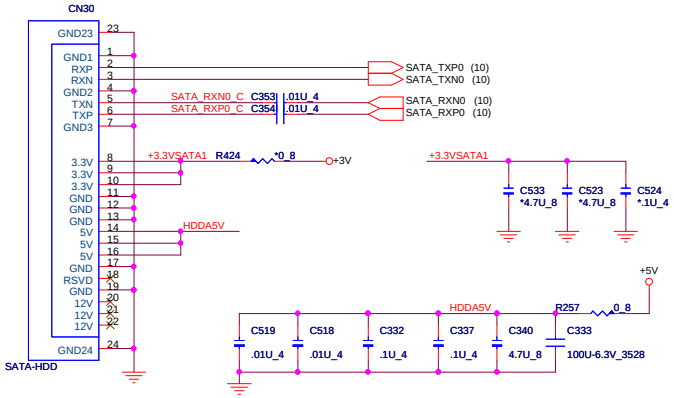

TP SWITCH

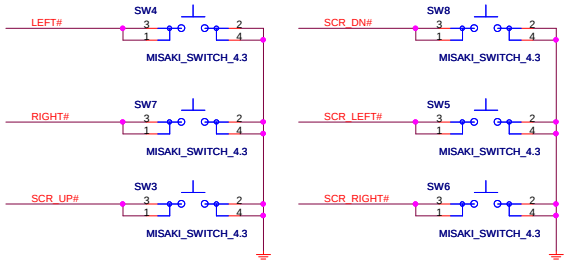

TP CONN

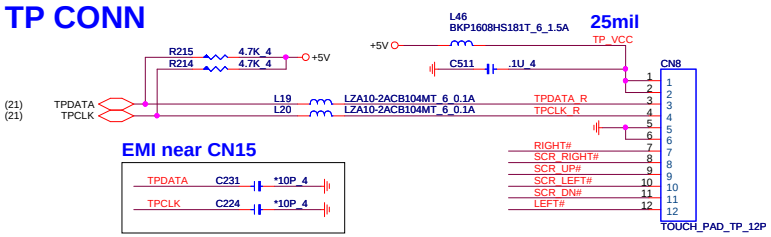

ODD (PATA)

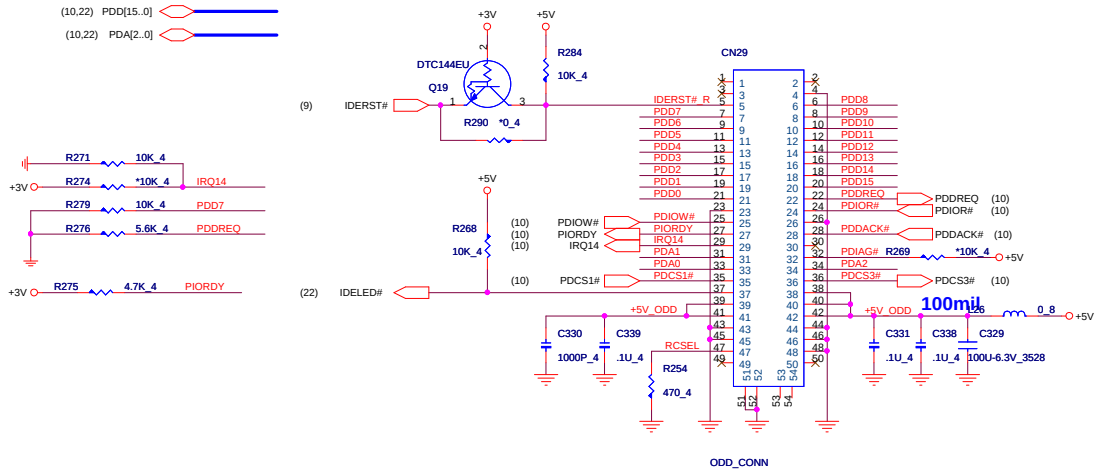

PROJECT : ZO3
Quanta Computer Inc.

Size	Document Number	Rev
	SATA-HDD & PATA-ODD	1A

Date: Tuesday, December 19, 2006 Sheet 18 of 30

CODEC(ALC268)

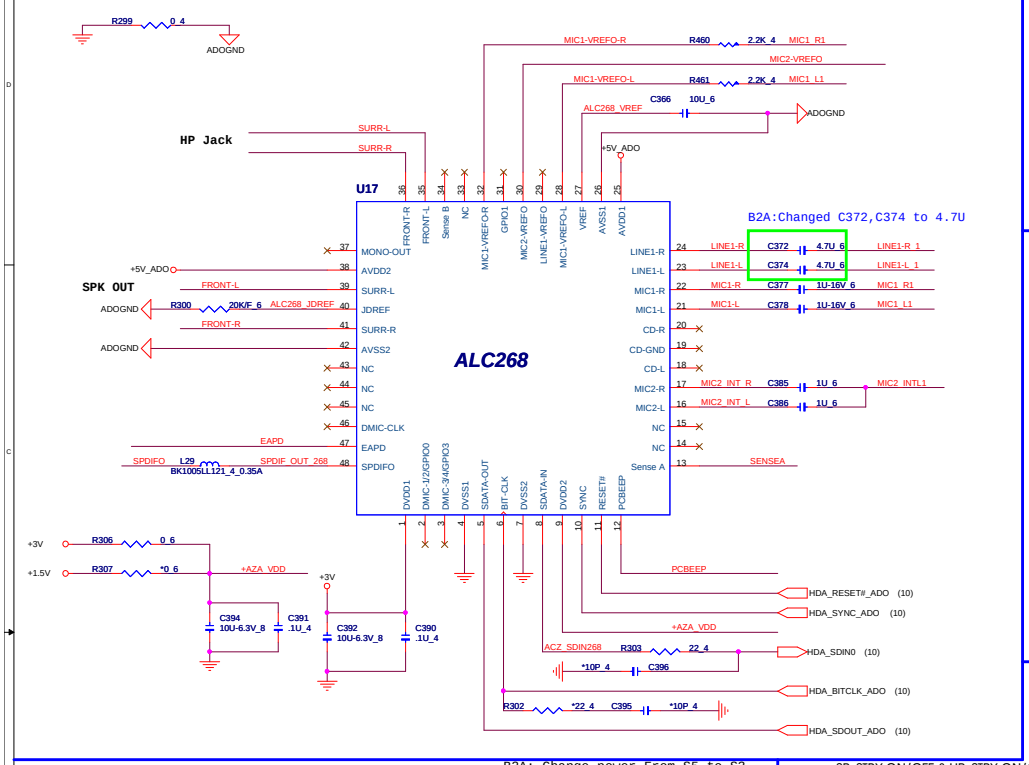

CODEC(ALC268) Power

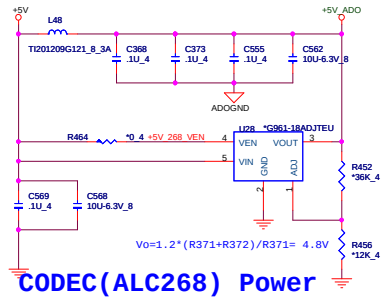

INT MIC array

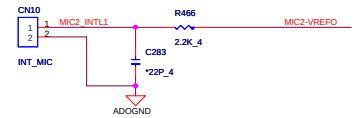

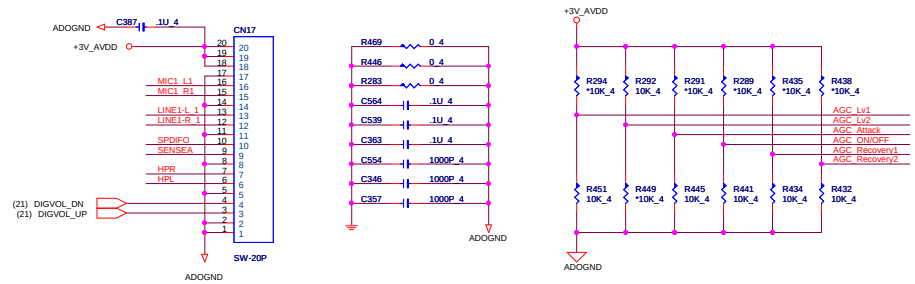

AGC-attack-time selection

AGC_Attack (4 pin)	Attack time
LOW	1 ms
Hi	2 ms

AGC ON/OFF selection

AGC_ON/OFF (6 pin)	AGC ON/OFF
LOW	ON
Hi	OFF

AGC-recovery-time selection

AGC_Recovery1 (10 pin)	AGC_Recovery2 (11 pin)	Recovery Time
LOW	LOW	1.0 s
LOW	Hi	2.0 s
Hi	LOW	4.0 s
Hi	Hi	8.0 s

AGC-on-level selection

AGC_Lv1 (2 pin)	AGC_Lv2 (3 pin)	AGC ON Level	Output Po (RL=8 ohm)
LOW	LOW	9.8 dBV	1.2 W
LOW	Hi	9.0 dBV	1.0 W
Hi	LOW	8.1 dBV	0.8 W
Hi	Hi	6.0 dBV	0.5 W

MDC

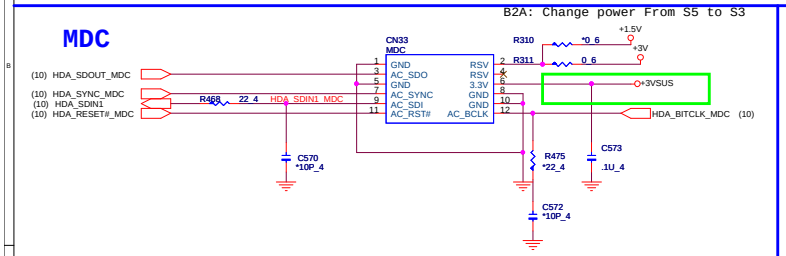

SPK

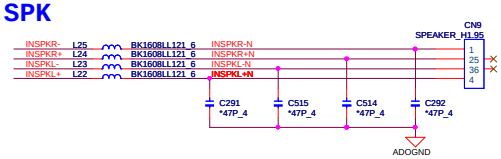

Beep

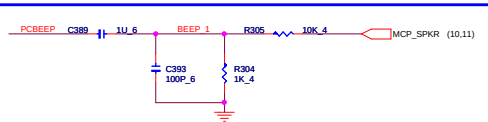

SP_STBY ON/OFF & HP_STBY ON/OFF

SP_STBY1 (33 pin)	SP_STBY2 (34 pin)	SP_STBY ON/OFF
LOW	LOW	ON
LOW	Hi	OFF
Hi	LOW	OFF
Hi	Hi	OFF

HP_STBY1 (35 pin)	HP_STBY2 (36 pin)	HP_STBY ON/OFF
LOW	LOW	ON
LOW	Hi	OFF
Hi	LOW	OFF
Hi	Hi	OFF

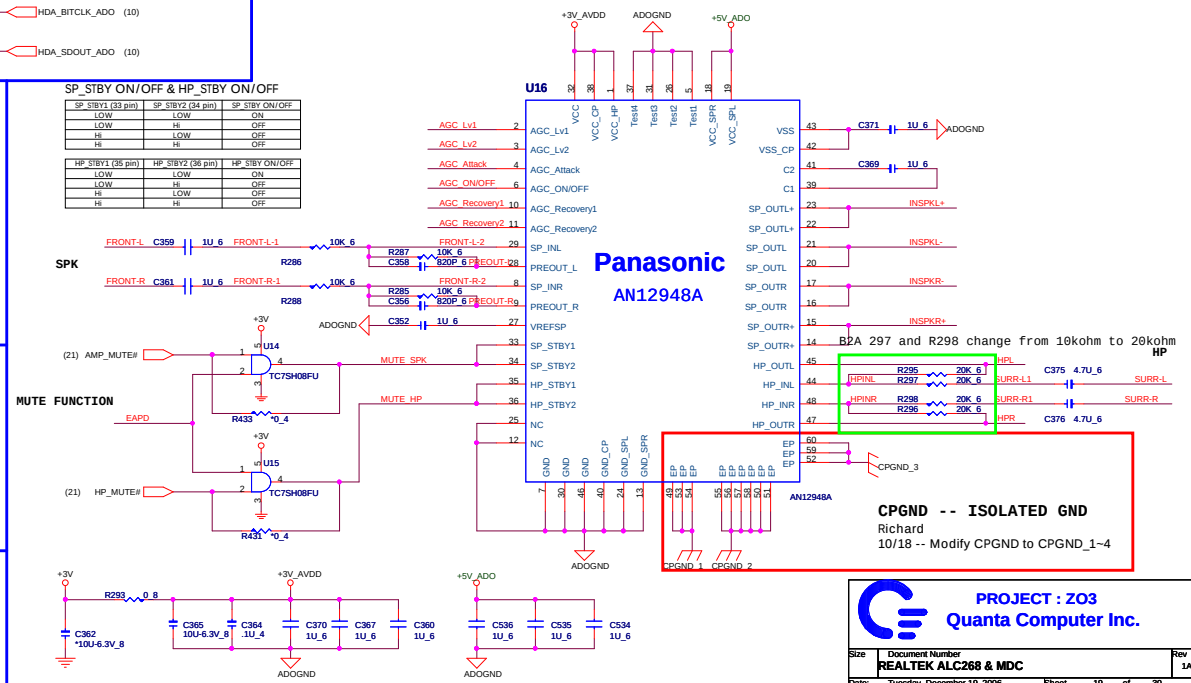

PROJECT : ZO3
Quanta Computer Inc.

Size	Document Number	Rev
	REALTEK ALC268 & MDC	1A

Date: Tuesday, December 19, 2006 Sheet 19 of 30

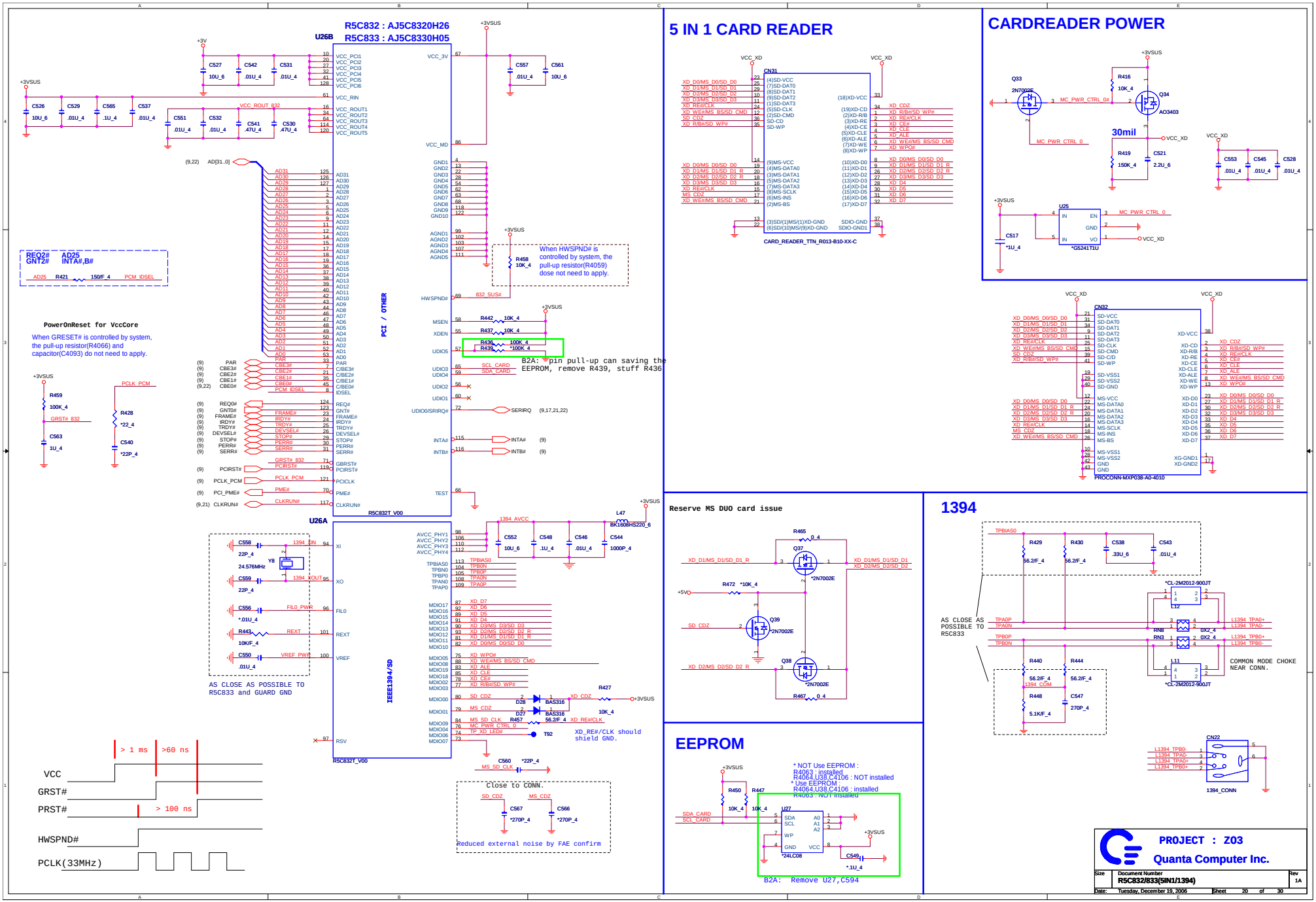

PDF created with FinePrint pdfFactory Pro trial version http://www.fineprint.com

WPC8769LDG

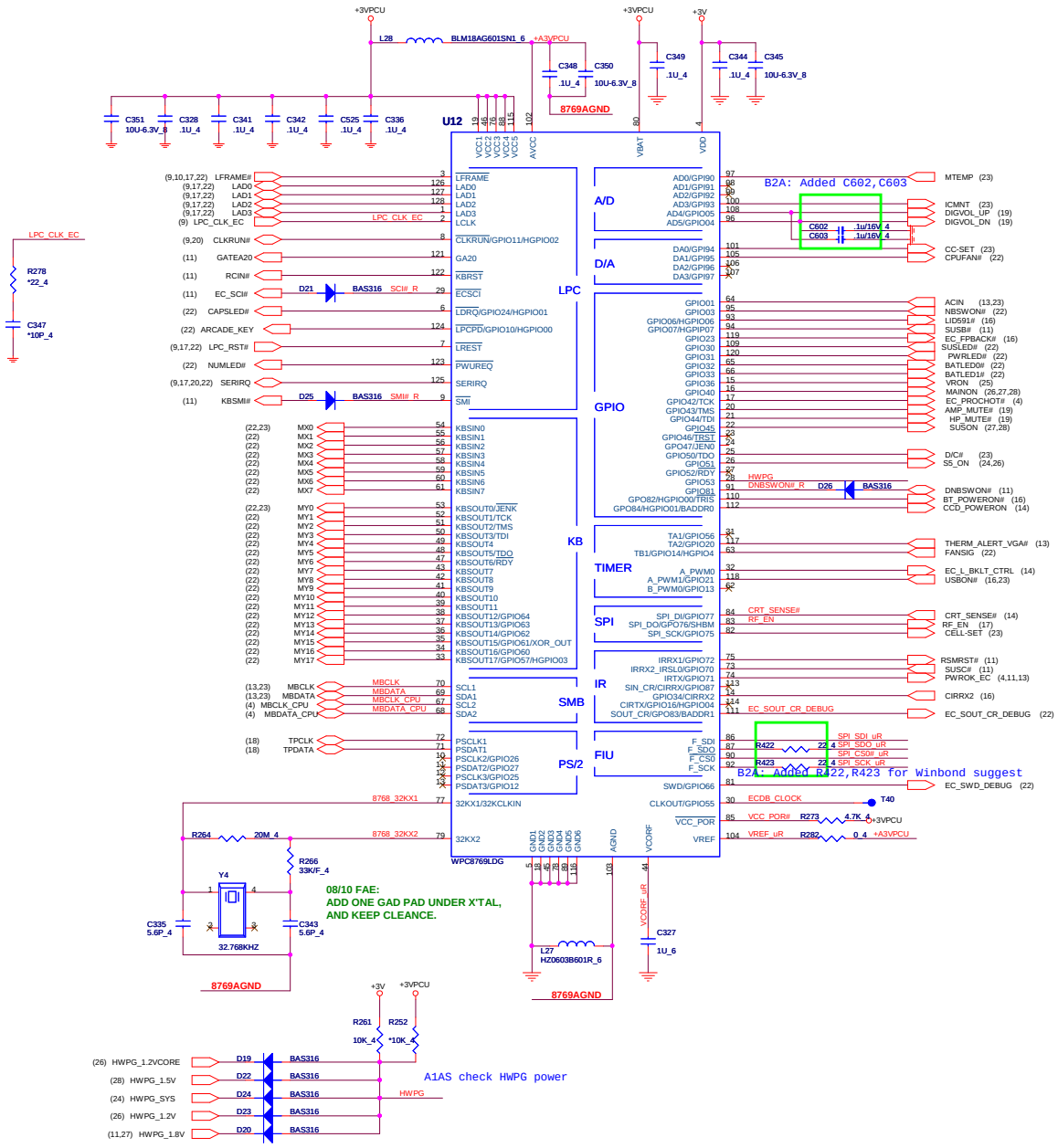

I/O ADDRESS SETTING

	I/O Address	
BADDR1-0	Index	Data
0 0	XOR TREE TEST MODE	
0 1	CORE DEFINED	
1 0	2Eh	2Fh
1 1	164Eh	164Fh

SHBM=0: Enable shared memory with host BIOS

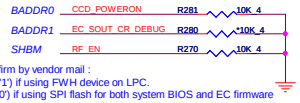

1/13 Comfirm by vendor mail :
Disabled ('1') if using FWH device on LPC.
Enabled ('0') if using SPI flash for both system BIOS and EC firmware

SMBUS PULL-UP

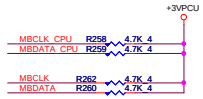

ACER ID

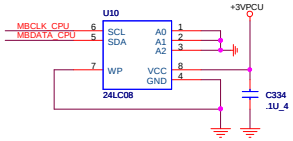

SPI FLASH

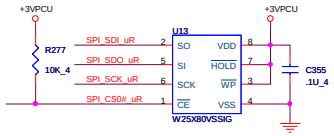

INTERNAL KEYBOARD STRIP SET

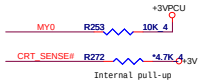

PROJECT : Z03

Quanta Computer Inc.

Size	Document Number	Rev
	PC8769L & FLASH	1A

Date: Tuesday, December 19, 2006 Sheet 21 of 30

INT K/B

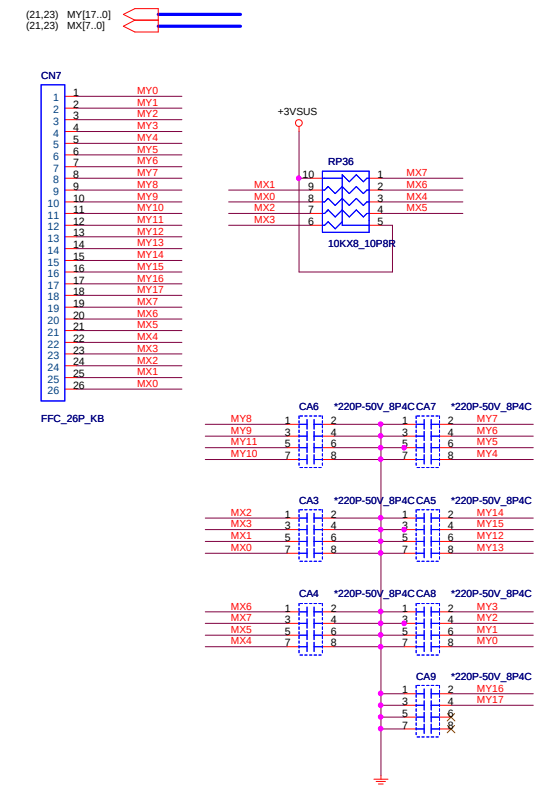

LED

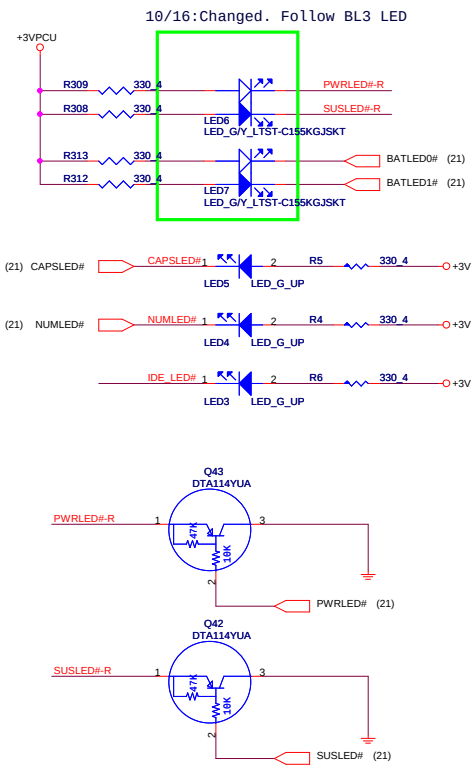

CPU FAN

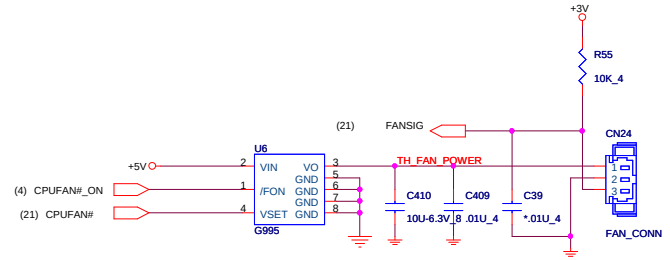

FANPWR = 1.6*VSET

DEBUG PORT

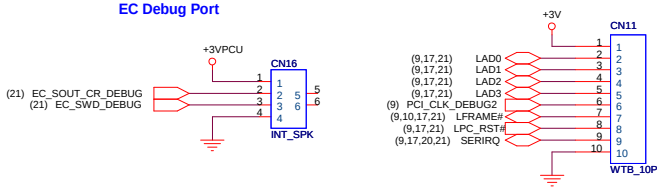

Button

BUTTON MATRIX

	MY0
MX1	MAIL
MX2	WWW
MX4	WIRELESS
MX5	BLUETOOTH

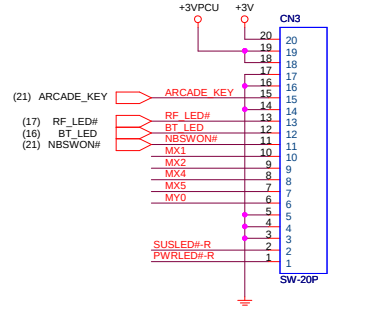

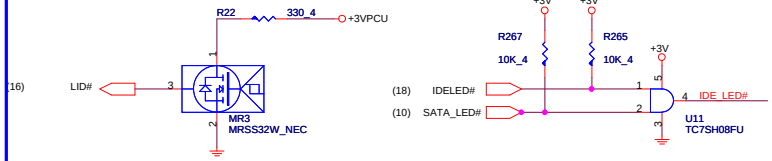

Debug

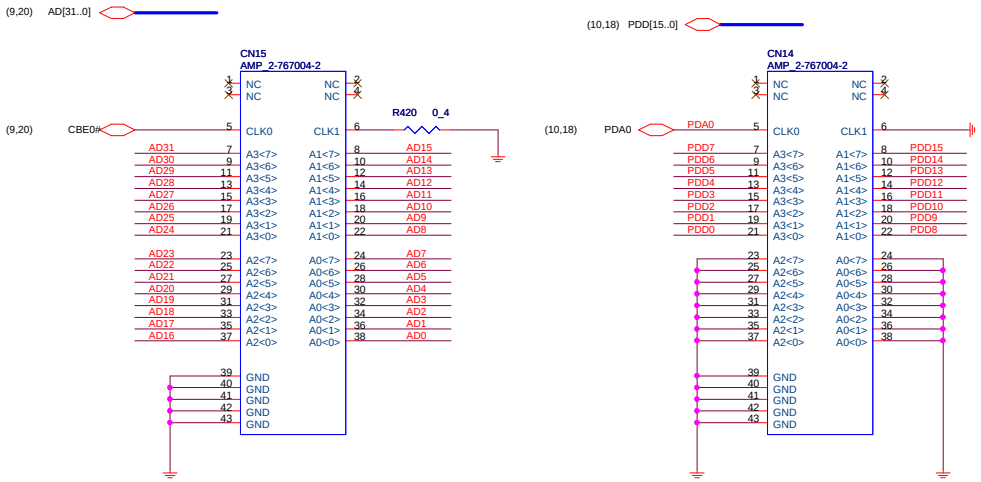

PROJECT : ZO3

Quanta Computer Inc.

Size	Document Number	Rev
	FAN,SWITCH,LED,KB,DEBUG PORT,TP	1A

Date: Tuesday, December 19, 2006 Sheet 22 of 30

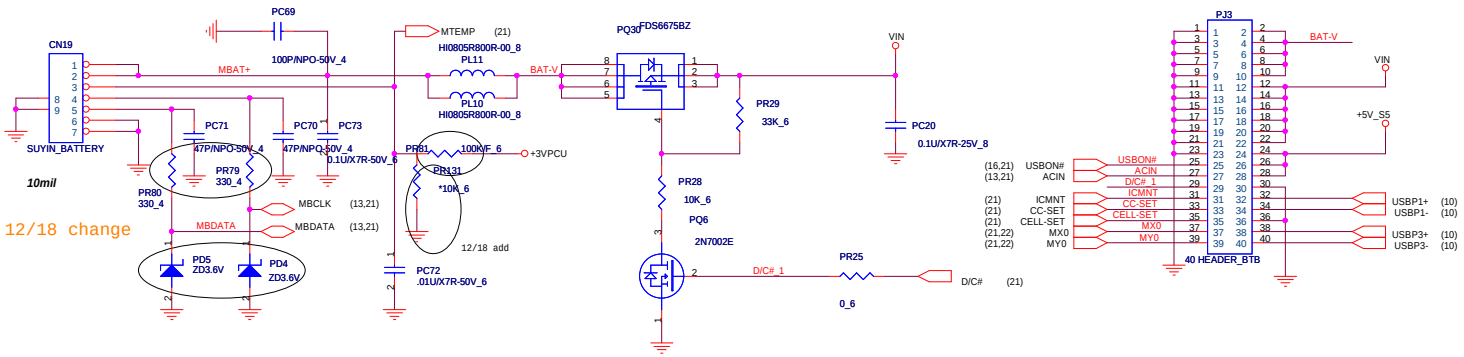

CELL-SET = Hi ----> Cells = VDD ---->4S
CELL-SET = Low ----> Cells = GND ---->3S

PROJECT : ZO3
Quanta Computer Inc.

Size	Document Number	Rev
Custom	ISL6251 CHARGER	A

Date: Tuesday, December 19, 2006 Sheet 23 of 30

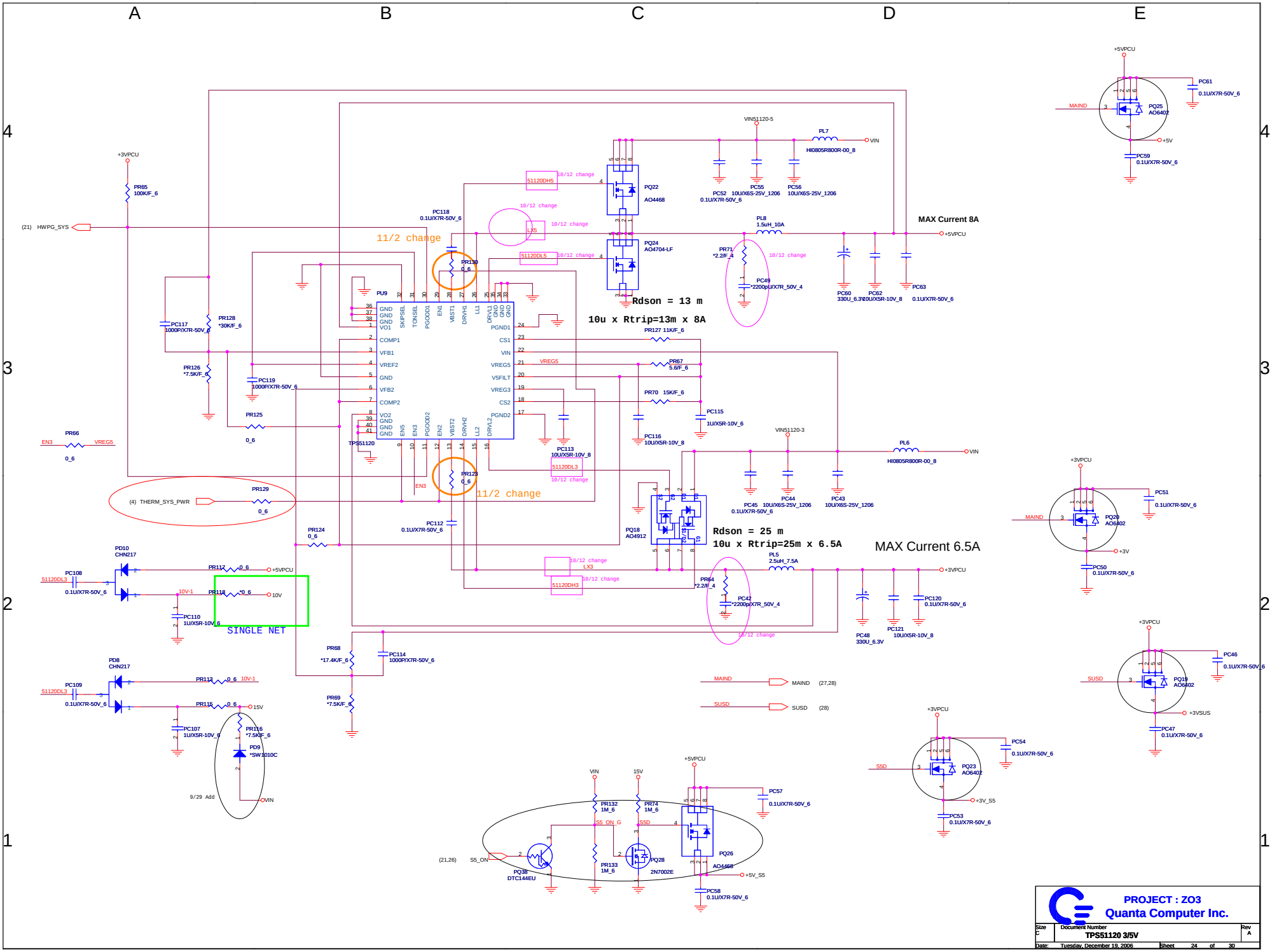

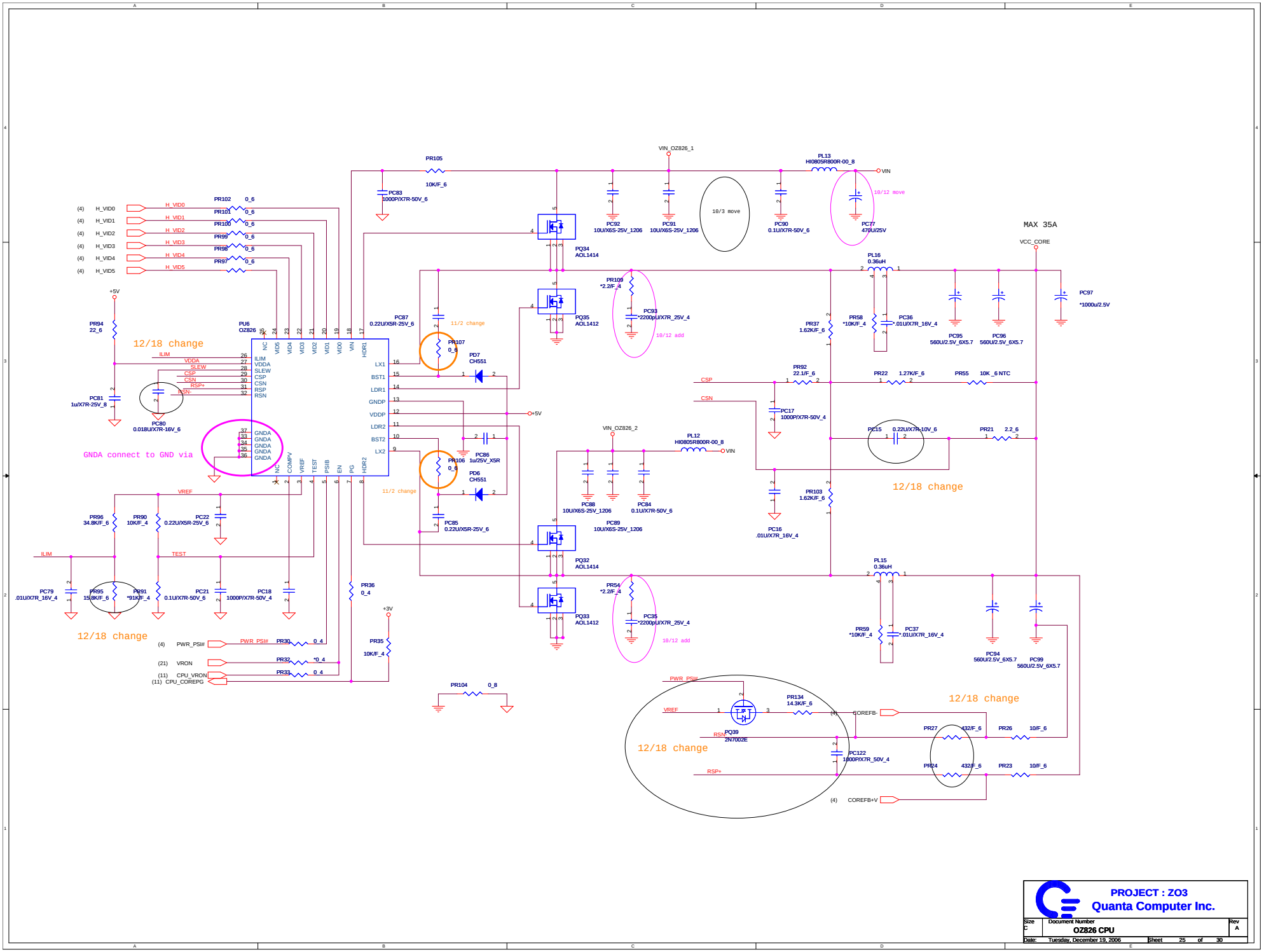

VID[1:0]		
VID1	VID0	
0	0	1.2V
0	1	1.1V
1	0	1.0V
1	1	0.9V

MCP67 TABLE

INPUTS		OUTPUTS			VOUT1
G1	G0	OD1	OD2	OD3	
0	0	0.75x(1+R1/R2+R1/R3+R1/R4)			1.2V
1	0	0.75x(1+R1/R2+R1/R3)			1.1V
0	1	0.75x(1+R1/R2+R1/R4)			1.0V
1	1	0.75x(1+R1/R2)			0.9V

SC471A Set

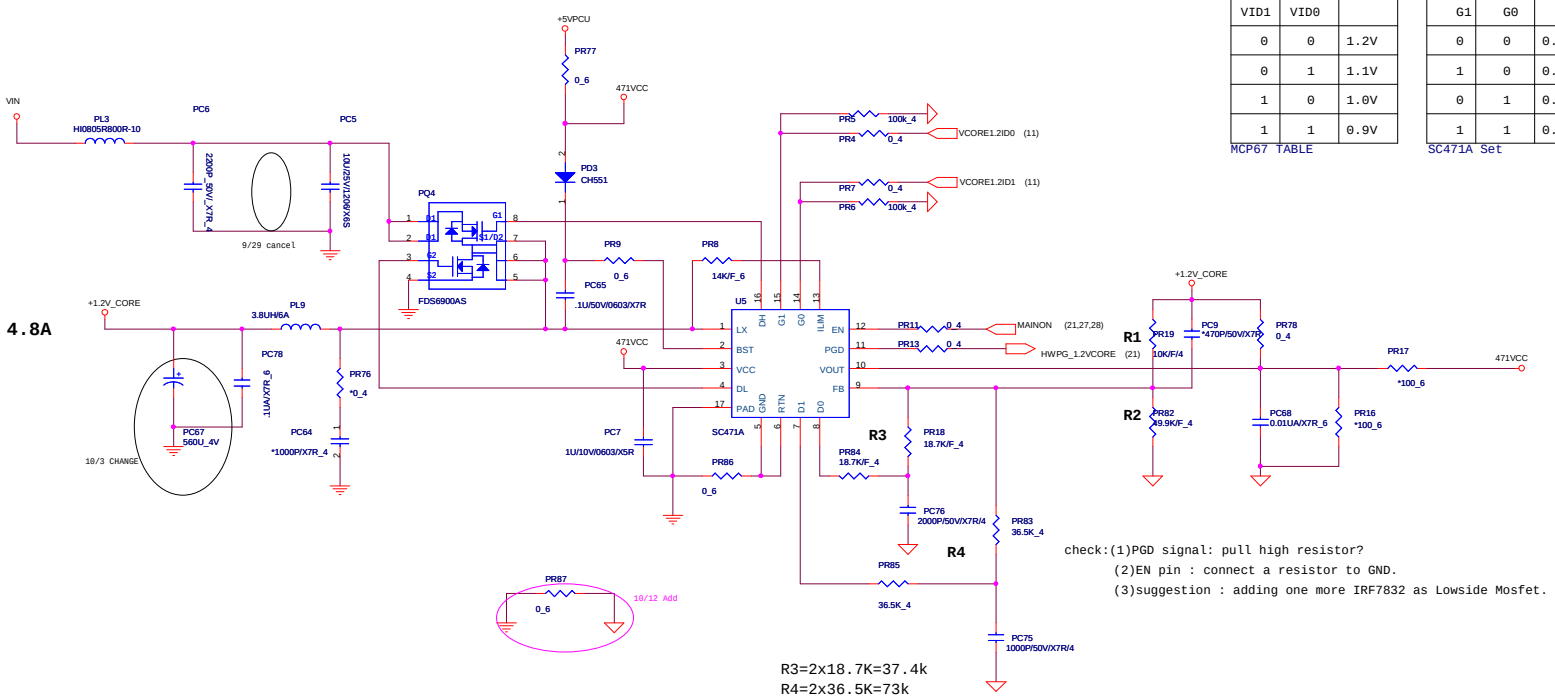

check:(1)PGD signal: pull high resistor?
(2)EN pin : connect a resistor to GND.
(3)suggestion : adding one more IRF7832 as Lowside Mosfet.

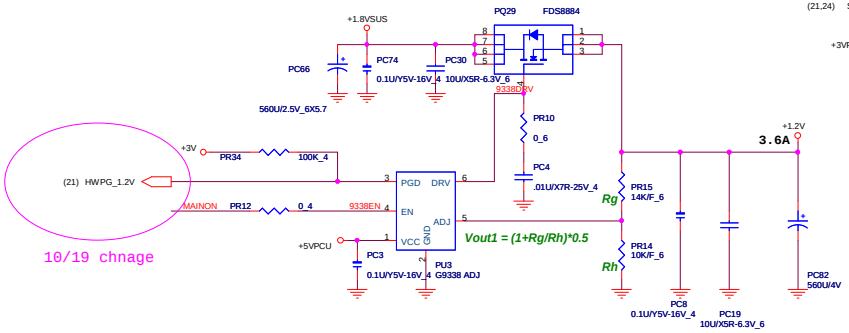

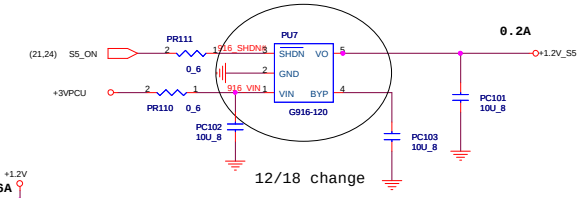

PROJECT : ZO3
Quanta Computer Inc.

Size	Document Number	Rev
C	SC471/ 1.2V	A

Date: Tuesday, December 19, 2006 Sheet 26 of 30

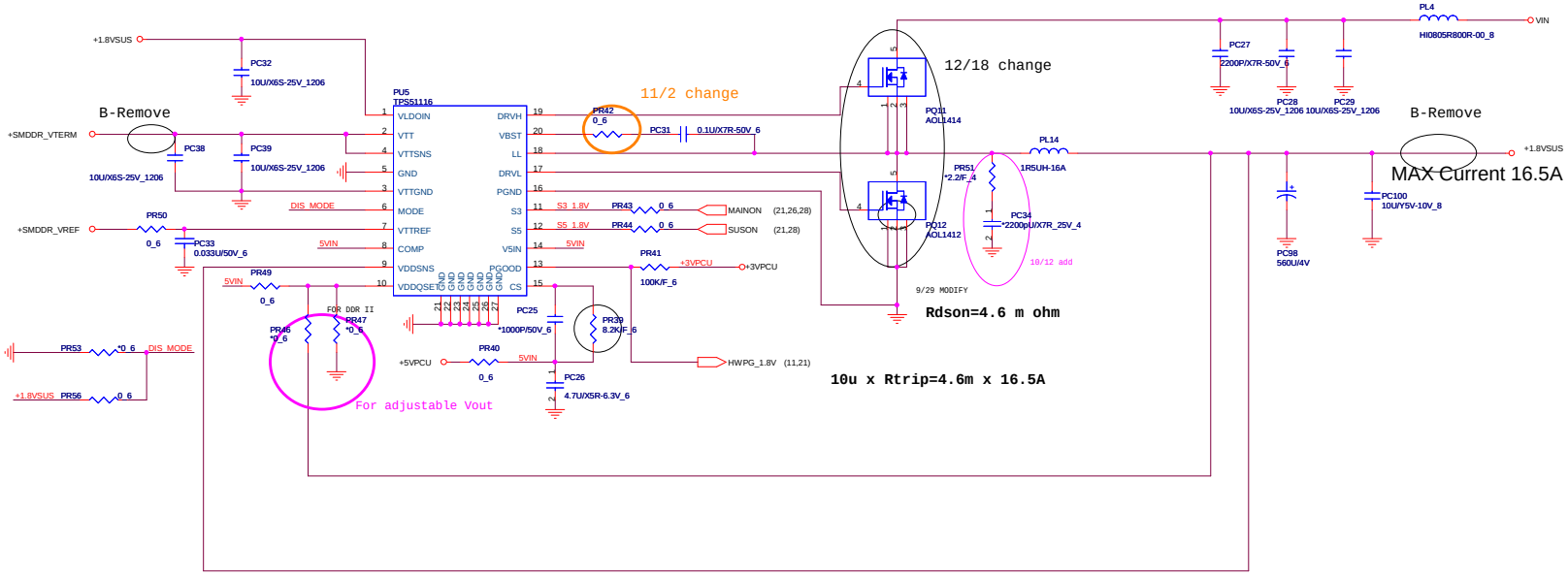

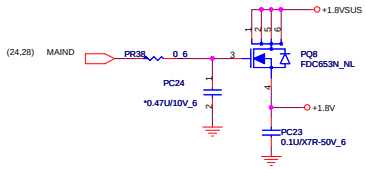

MAX Current 3.5A

PROJECT : ZO3
Quanta Computer Inc.

Size	Document Number	Rev
C	TPS51116 DDR	A

Date: Tuesday, December 19, 2006 Sheet 27 of 30

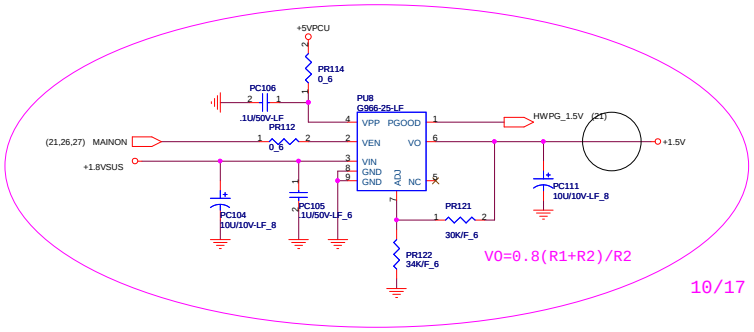

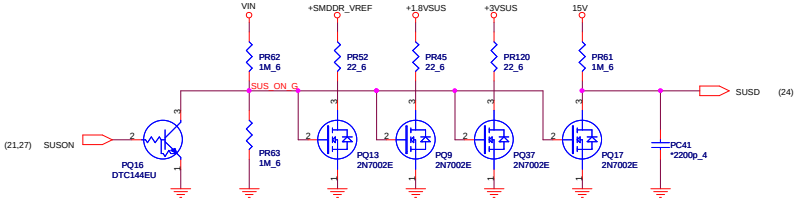

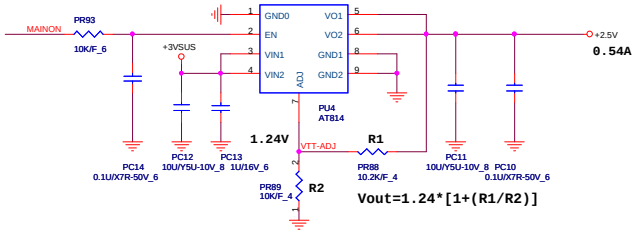

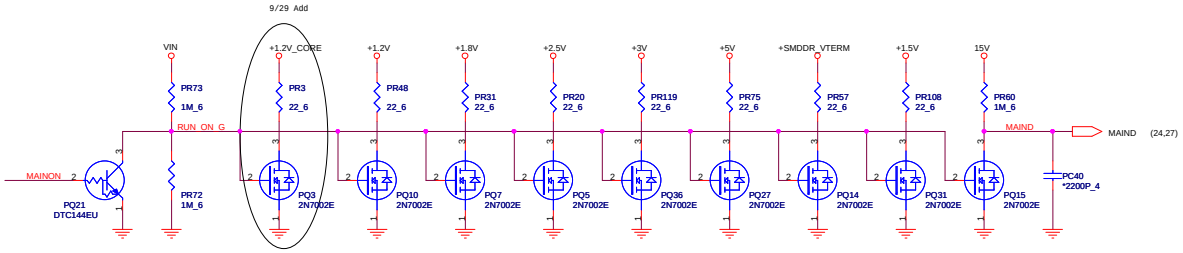

PROJECT : ZO3
Quanta Computer Inc.

Size	Document Number	Rev
C	DISCHARGER & LDO	A

Date: Tuesday, December 19, 2006 Sheet 28 of 30