HSF Property : **RoHS**

V13TL MB

CS BUILD

2009.0917

DELL CONFIDENTIAL/PROPRIETARY

	EE	DATE	POWER	DATE
DRAWER				
DESIGN				
CHECK				
RESPONSIBLE				

SIZE = 3 VER :

FILE NAME : XXXX-XXXXXX-XX

P/N XXXXXXXXXXXX

DATE	CHANGE NO.	REV

INVENTEC

TITLE *V13TL*

SIZE	CODE	DOC. NUMBER	REV
A3	CS	*1310A22966-0-MTR*	*A01*

SHEET 1 OF 49

TABLE OF CONTENTS

INVENTEC

TITLE V13TL

SIZE	CODE	DOC. NUMBER	REV
A3	CS	1310A22966-0-MTRA01	

CHANGE by 14-Sep-2009

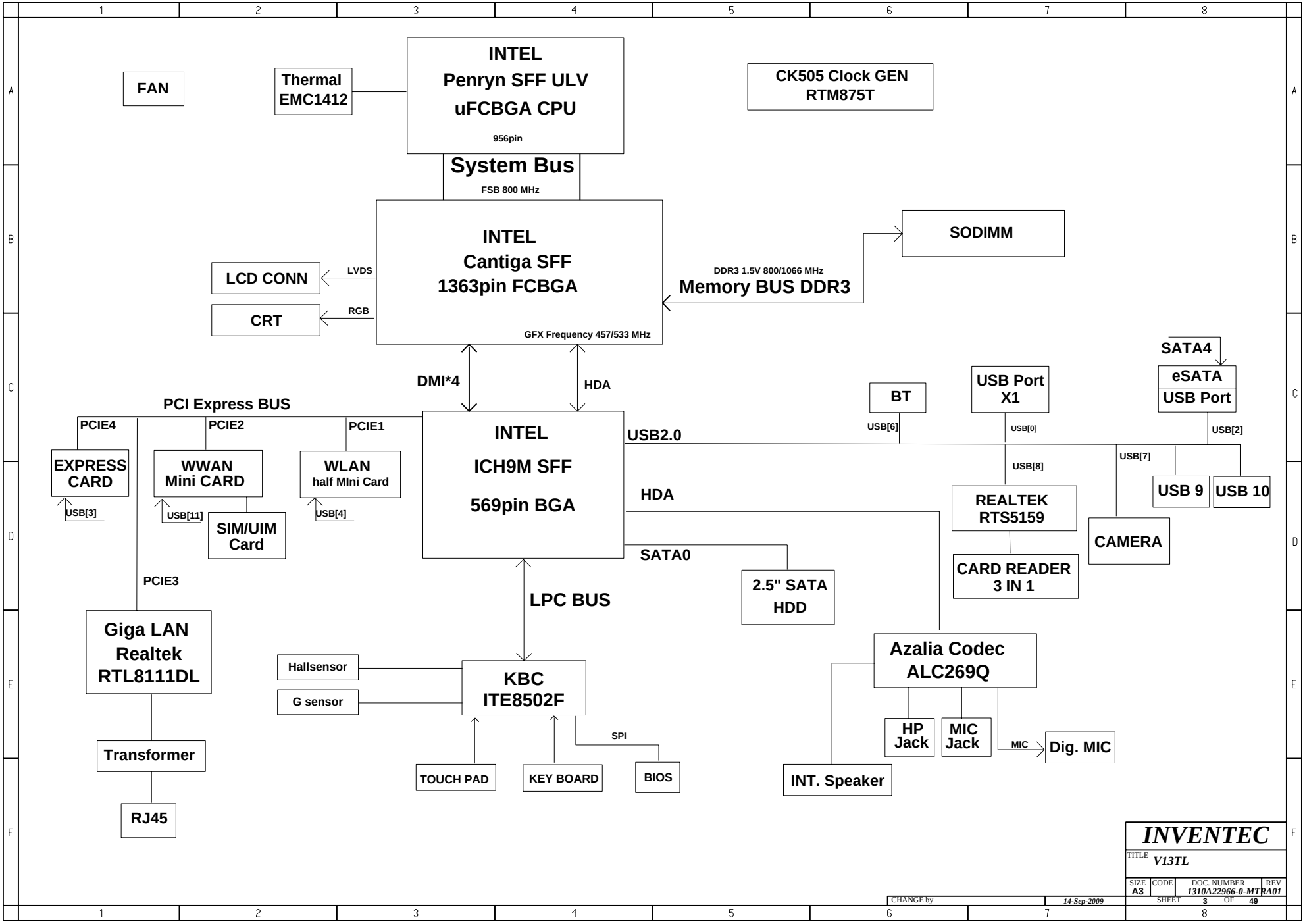

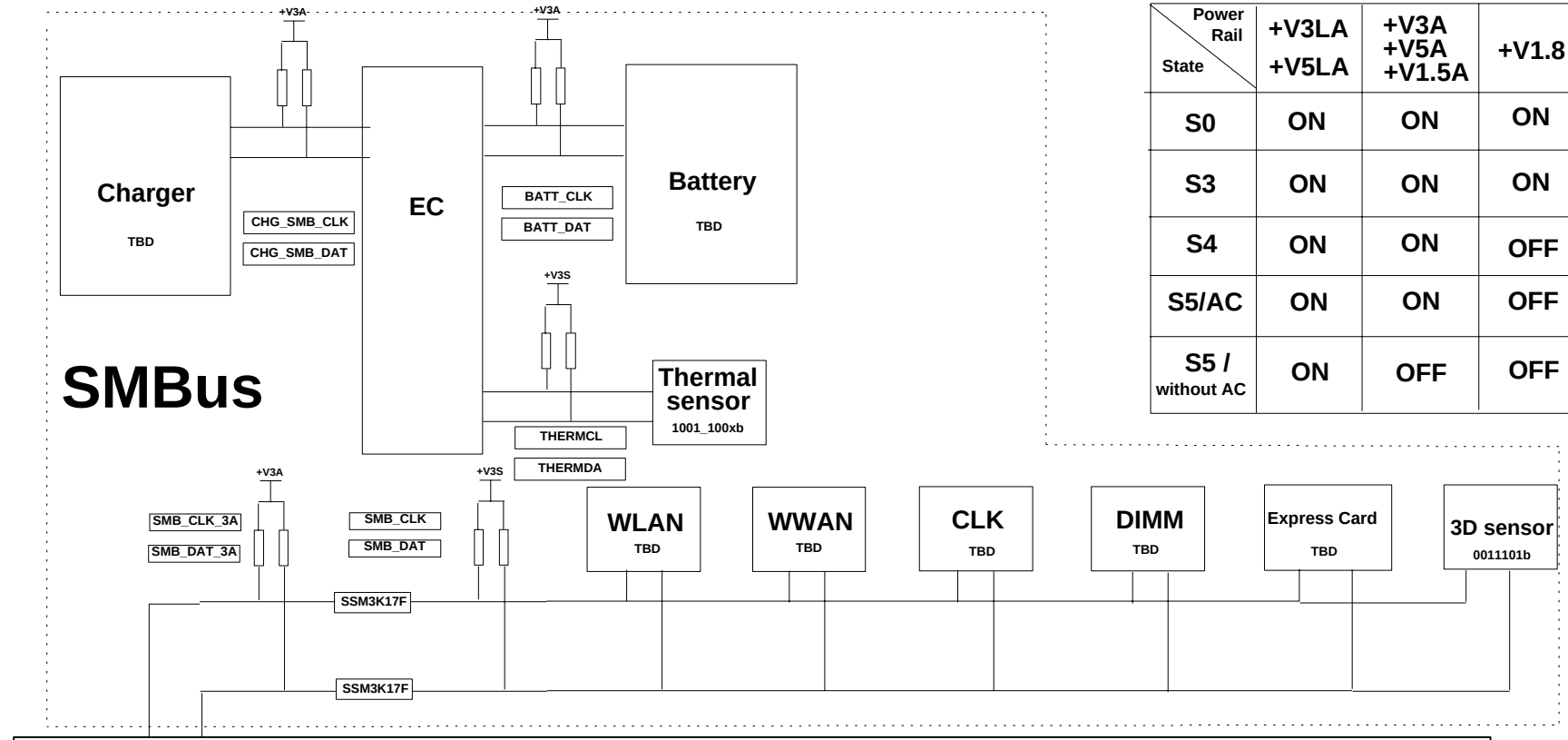

Power Rail / State	+V3LA +V5LA	+V3A +V5A +V1.5A	+V1.8	+V3S +V1.05S +V5S +V1.5S +VCC_CORE +VGFX_CORE
S0	ON	ON	ON	ON
S3	ON	ON	ON	OFF
S4	ON	ON	OFF	OFF
S5/AC	ON	ON	OFF	OFF
S5 / without AC	ON	OFF	OFF	OFF

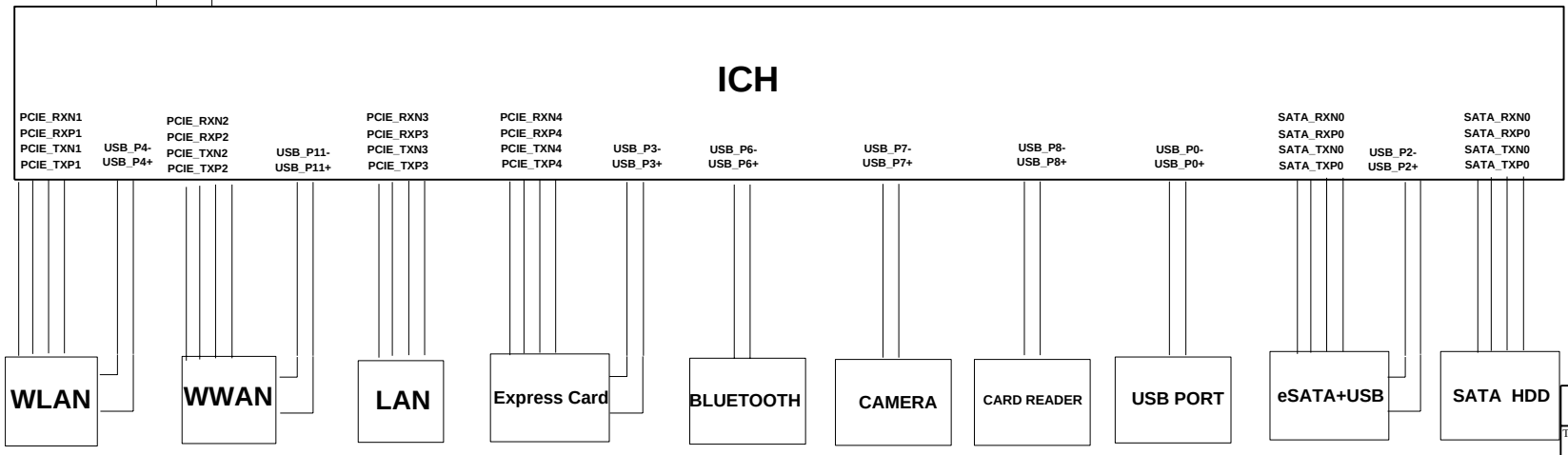

INVENTEC

TITLE V13TL

SIZE	CODE	DOC. NUMBER	REV
A3	CS	1310A22966-0-MTRA01	

CHANGE by 14-Sep-2009

SHEET 4 OF 49

Montevina Power on Sequence

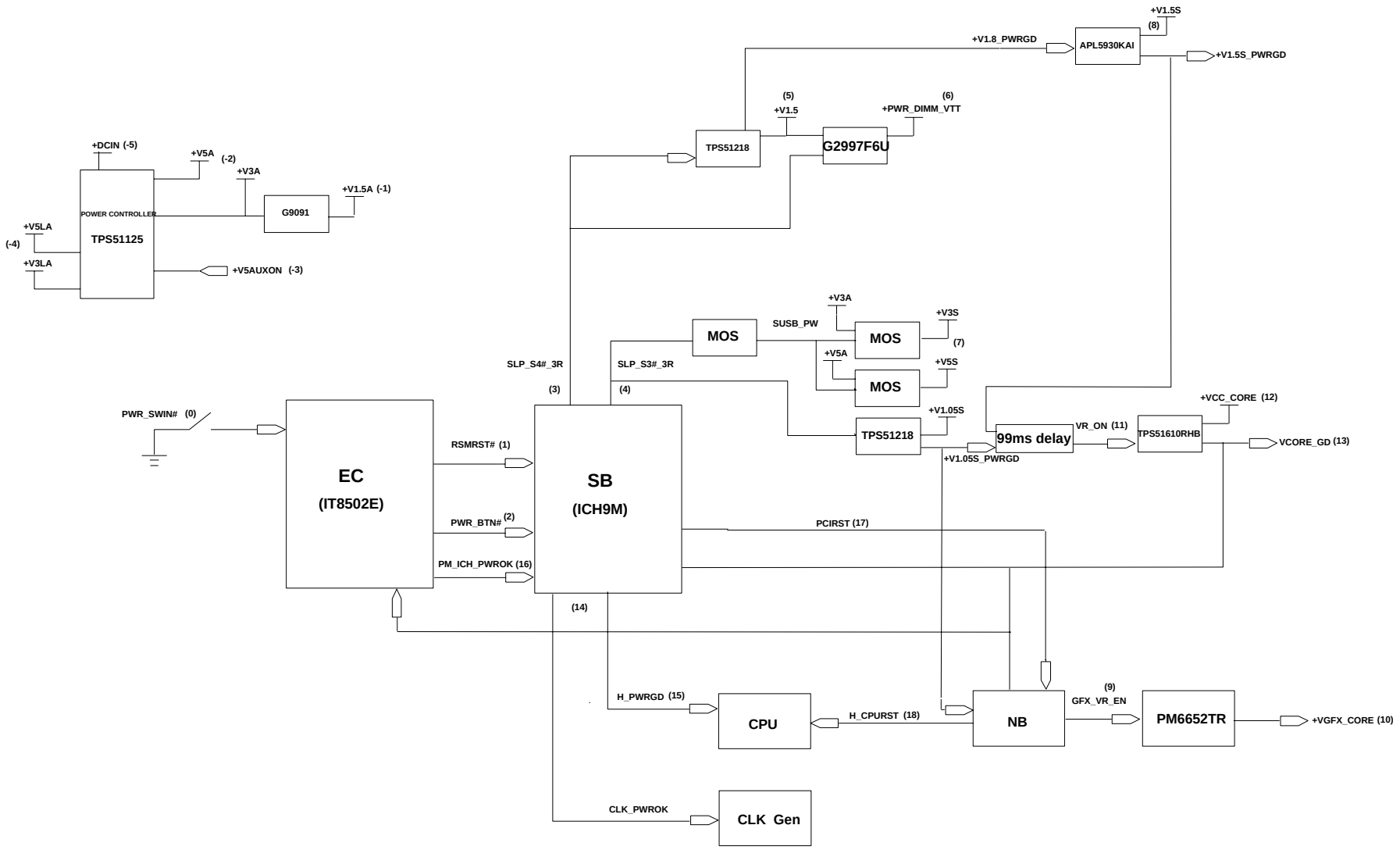

DELL CONFIDENTIAL/PROPRIETARY

INVENTEC			
TITLE V13TL Montevina Power on Sequence			
SIZE A3	CODE CS	DOC. NUMBER 1310A22966-0-MTR	REV A01
CHANGE by		14-Sep-2009	SHEET 5 OF 49

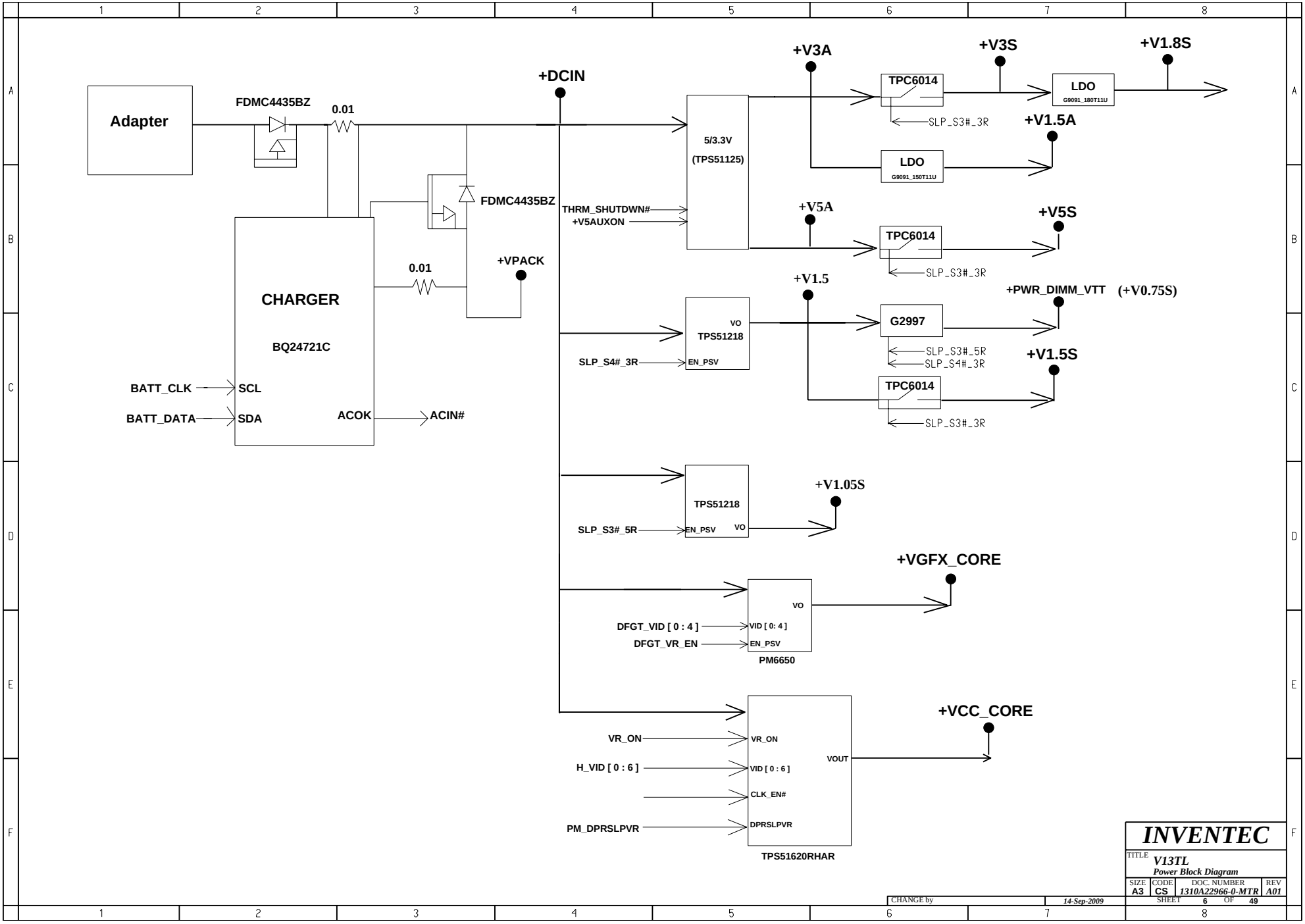

INVENTEC

TITLE V13TL
Power Block Diagram

SIZE	CODE	DOC. NUMBER	REV
A3	CS	1310A22966-0-MTR	A01

CHANGE by 14-Sep-2009 SHEET 6 OF 49

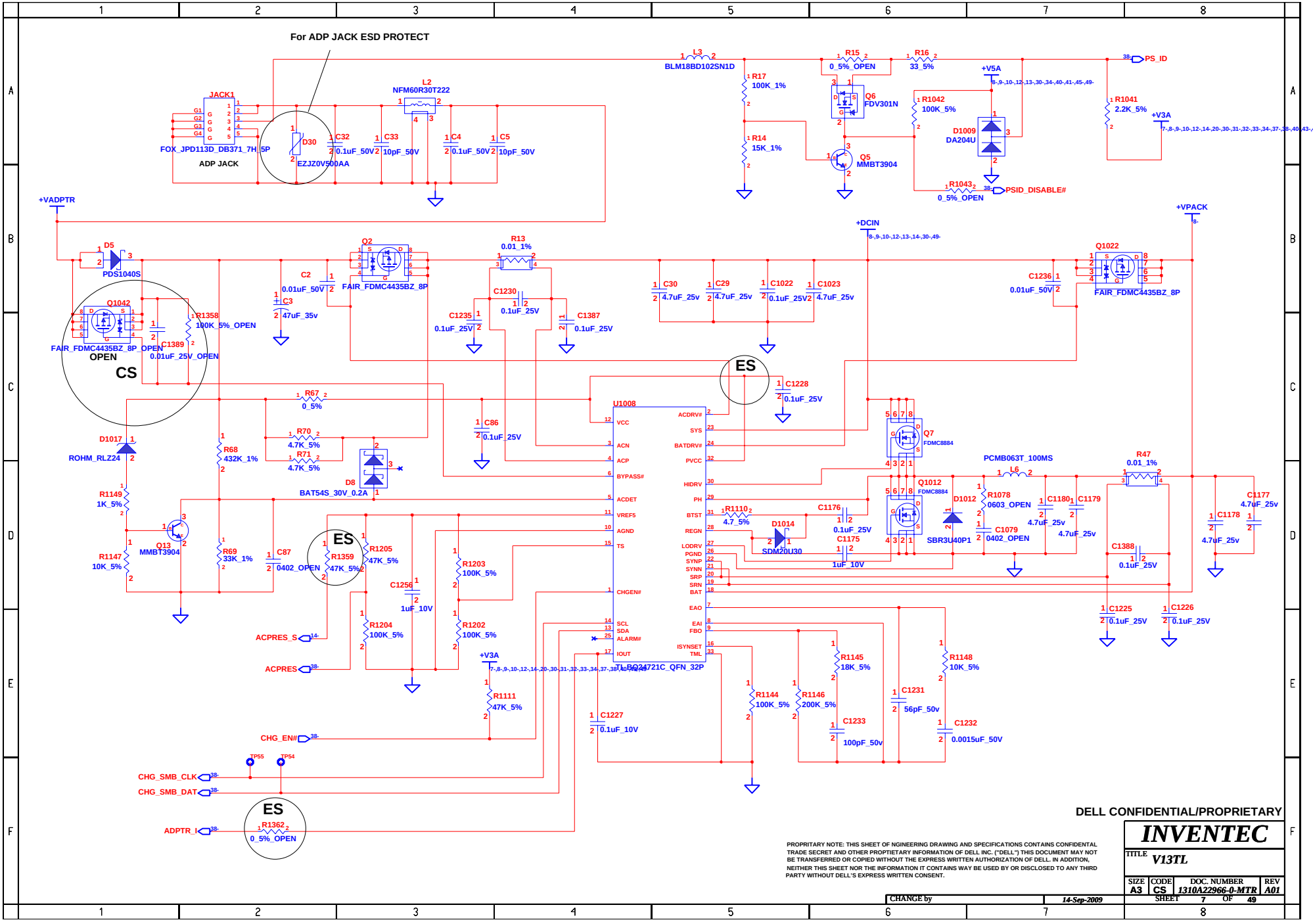

DELL CONFIDENTIAL/PROPRIETARY

PROPRITARY NOTE: THIS SHEET OF NGINEERING DRAWING AND SPECIFICATIONS CONTAINS CONFIDENTAL TRADE SECRET AND OTHER PROPTIETARY INFORMATION OF DELL INC. ("DELL") THIS DOCUMENT MAY NOT BE TRANSFERRED OR COPIED WITHOUT THE EXPRESS WRITTEN AUTHORIZATION OF DELL. IN ADDITION, NEITHER THIS SHEET NOR THE INFORMATION IT CONTAINS WAY BE USED BY OR DISCLOSED TO ANY THIRD PARTY WITHOUT DELL'S EXPRESS WRITTEN CONSENT.

INVENTEC			
TITLE V13TL			
SIZE A3	CODE CS	DOC. NUMBER 1310A22966-0-MTR	REV A01
CHANGE by		14-Sep-2009	SHEET 7 OF 49

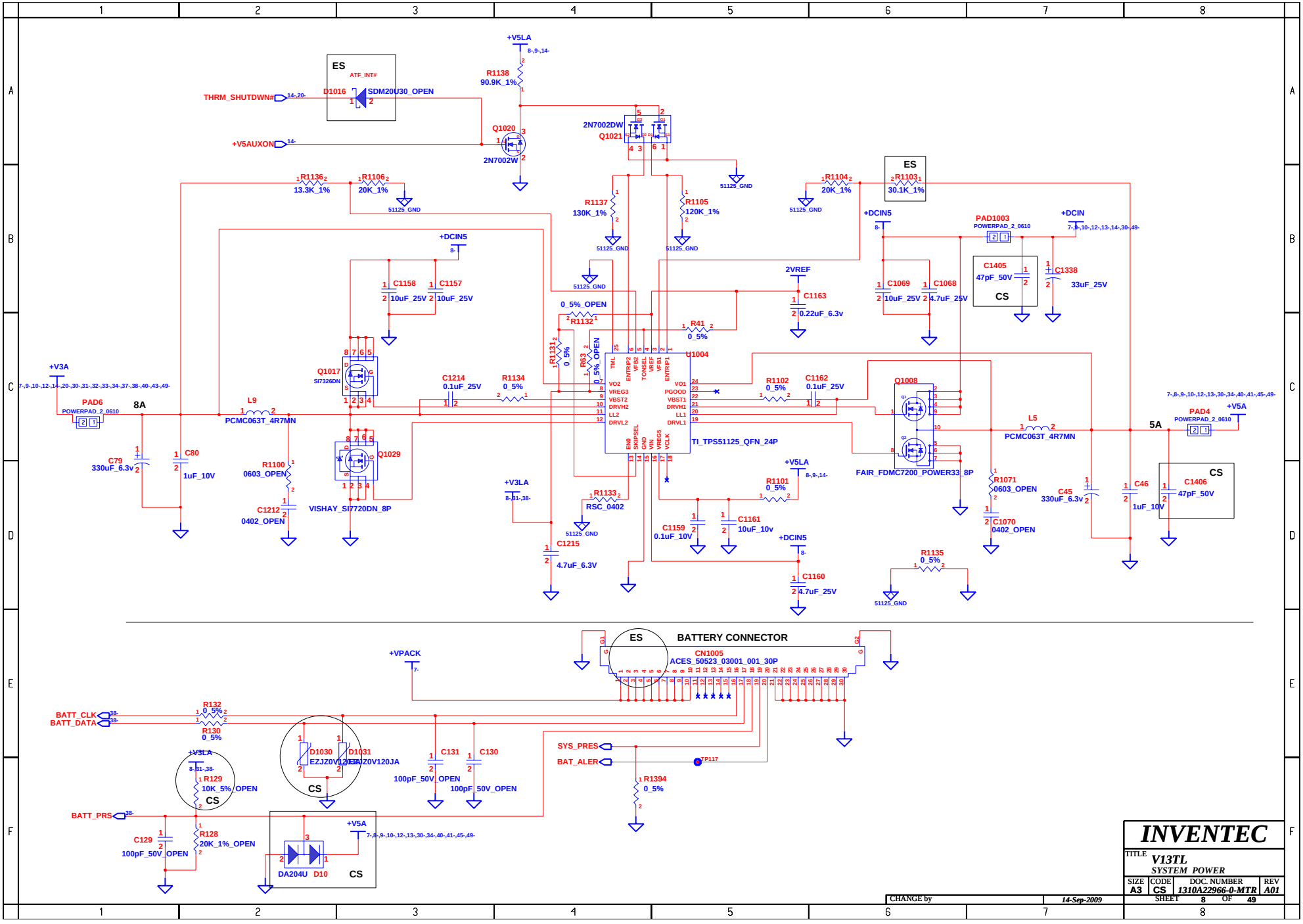

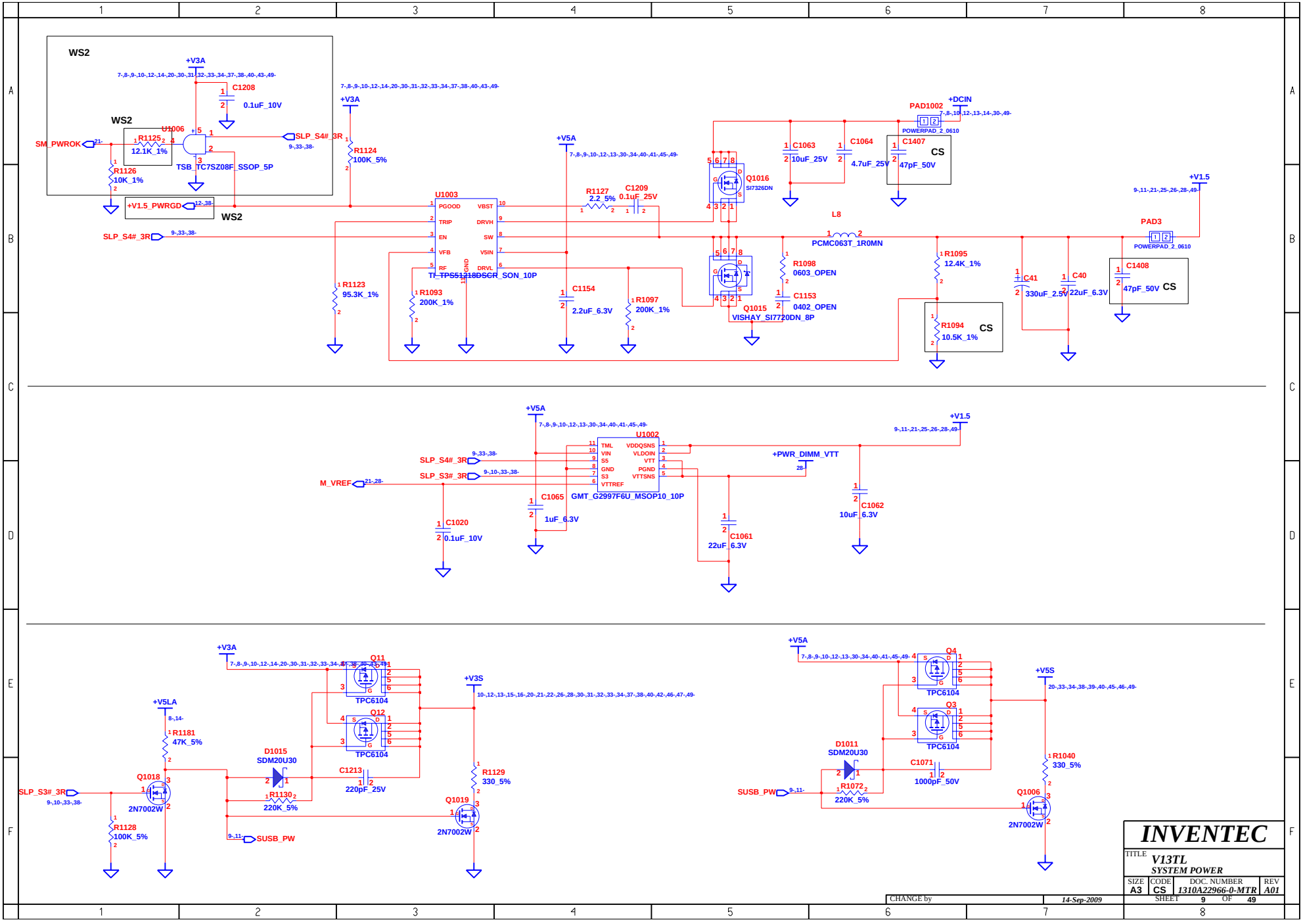

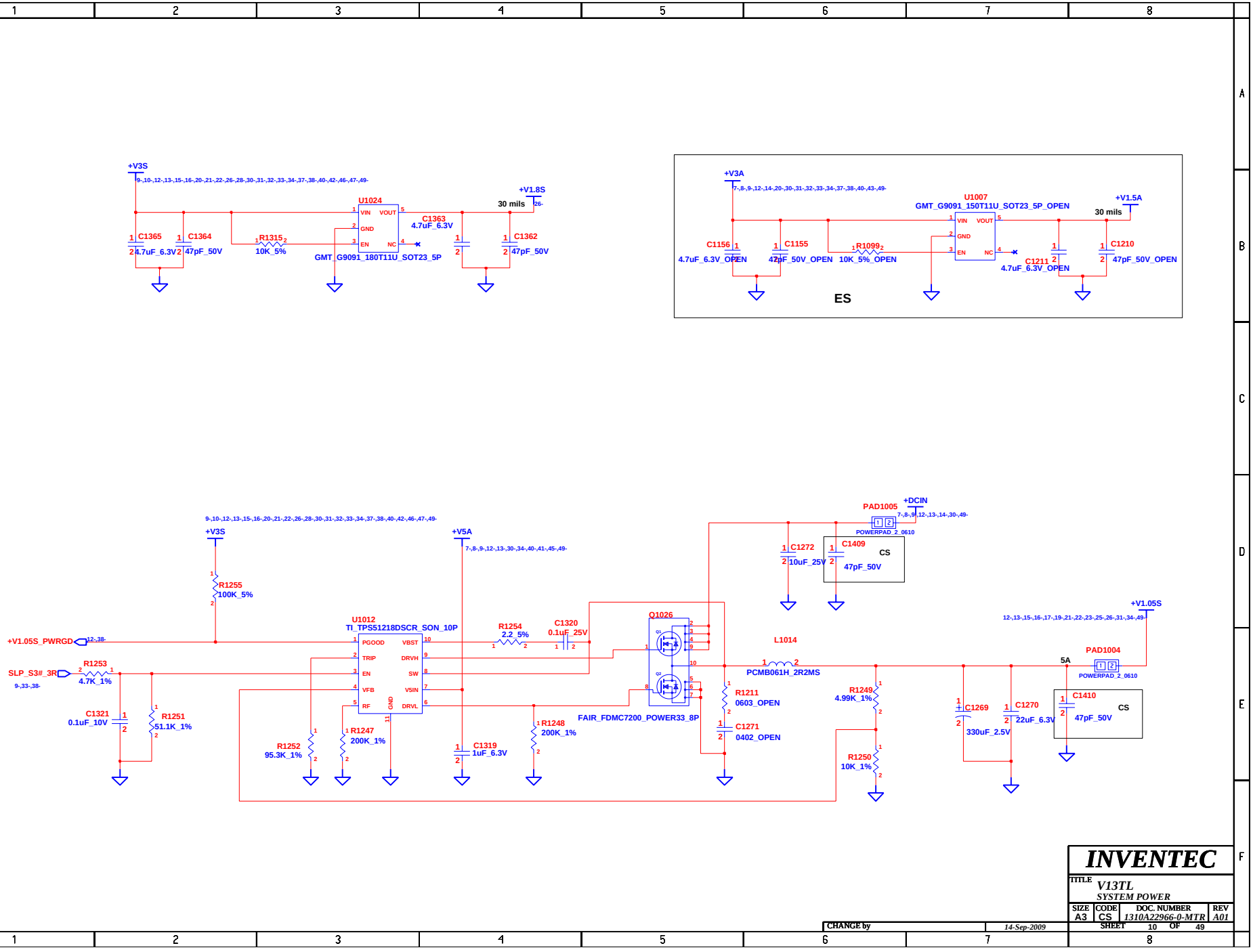

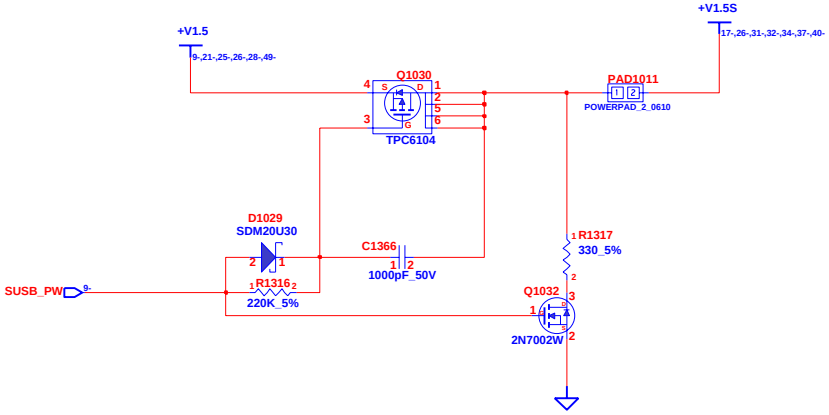

+V1.5S

INVENTEC			
TITLE V13TL			
SIZE A3	CODE CS	DOC. NUMBER 1310A22966-0-MTR	REV A01
		SHEET 11 OF 49	

CHANGE by 14-Sep-2009

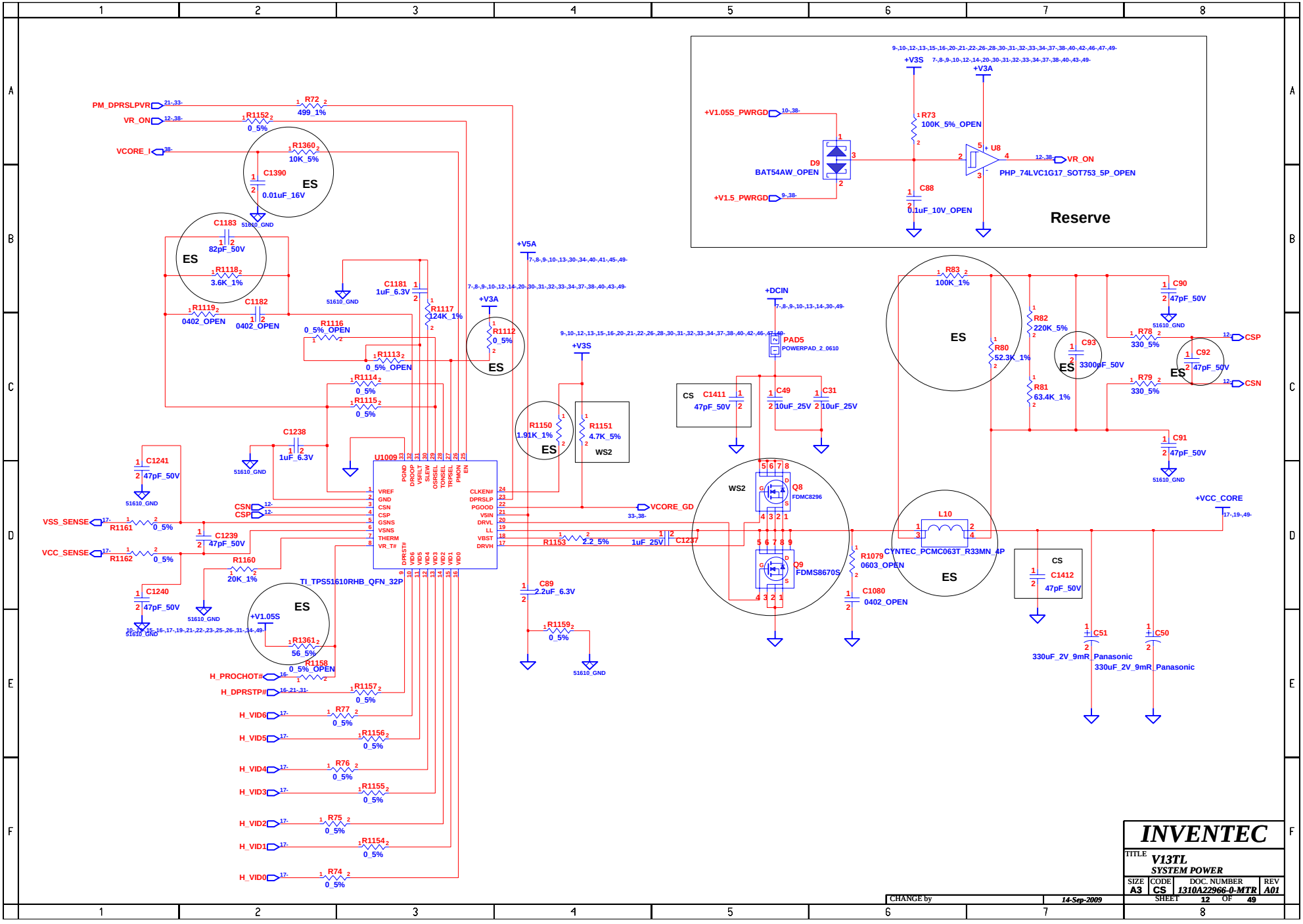

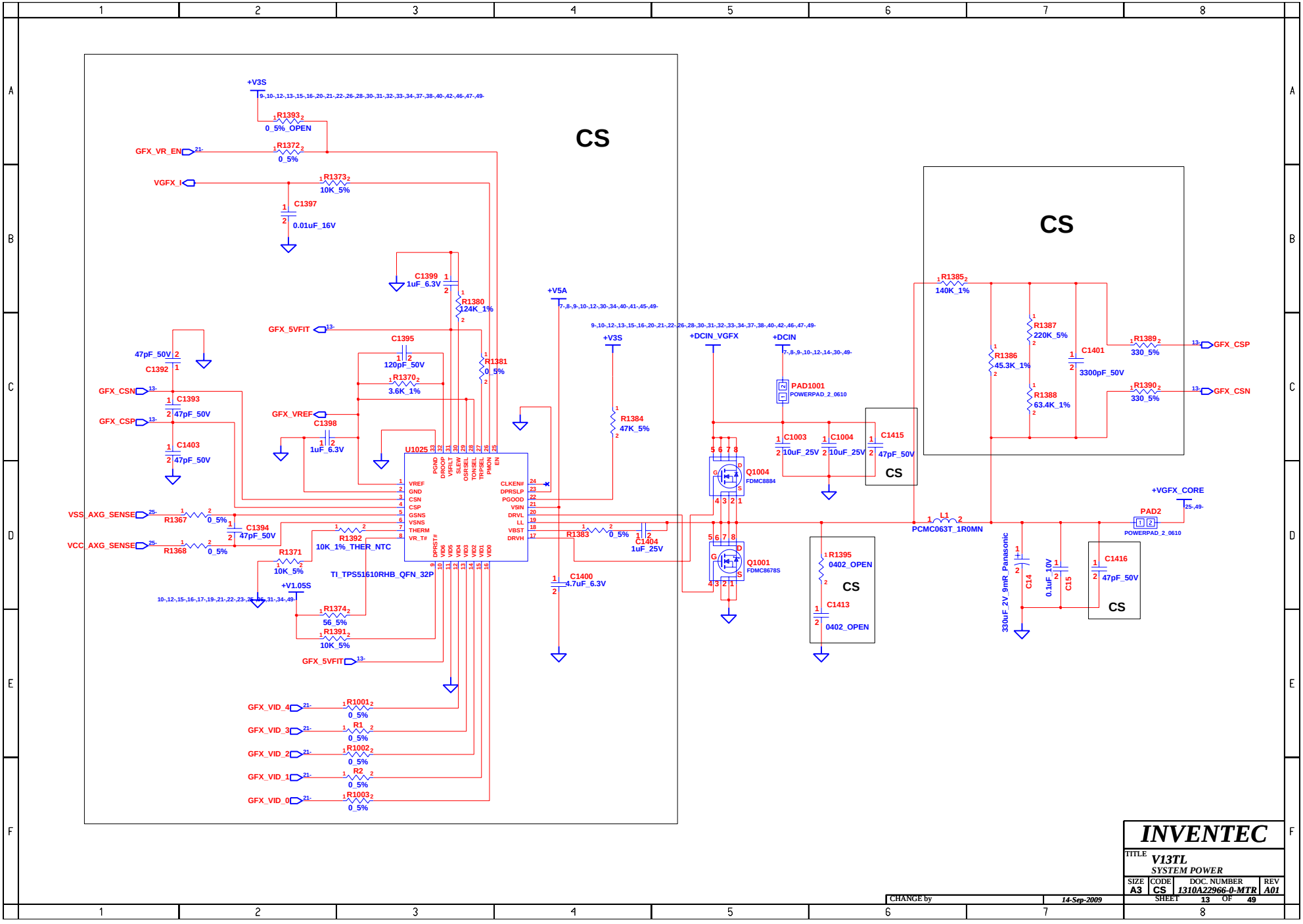

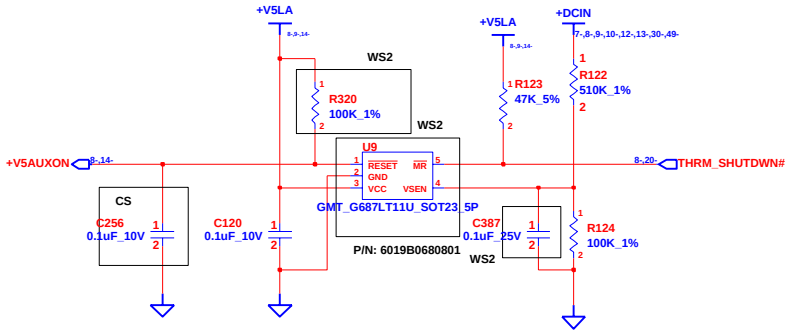

S5 ALL POWER TURN OFF WHEN BATTERY MODE

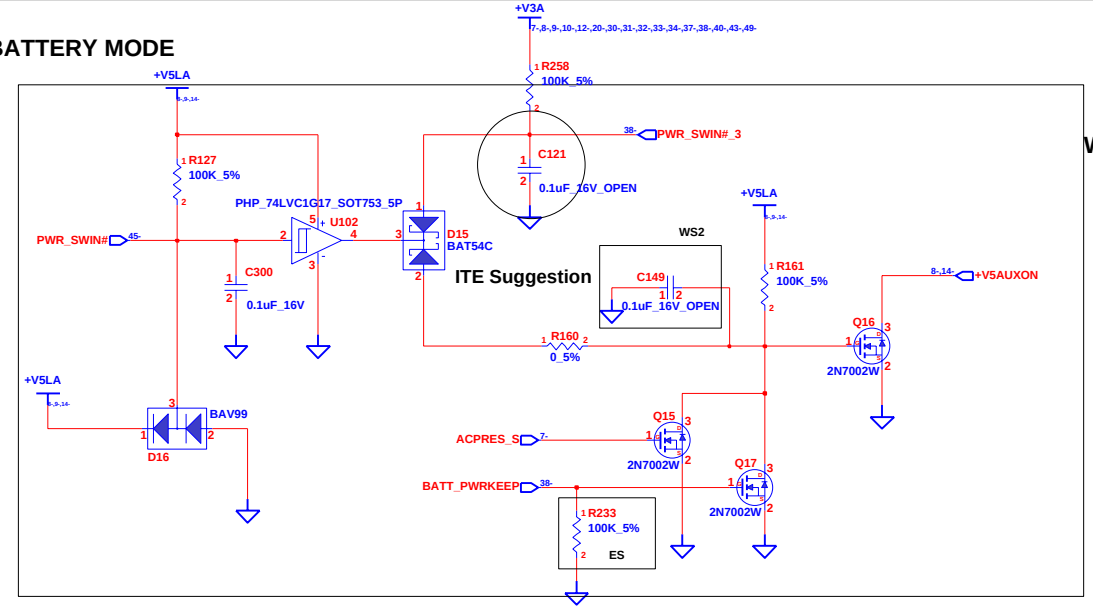

WS

INVENTEC			
TITLE V13TL SYSTEM POWER			
SIZE A3	CODE CS	DOC. NUMBER 1310A22966-0-MTR	REV A01
CHANGE by		14-Sep-2009	SHEET 14 OF 49

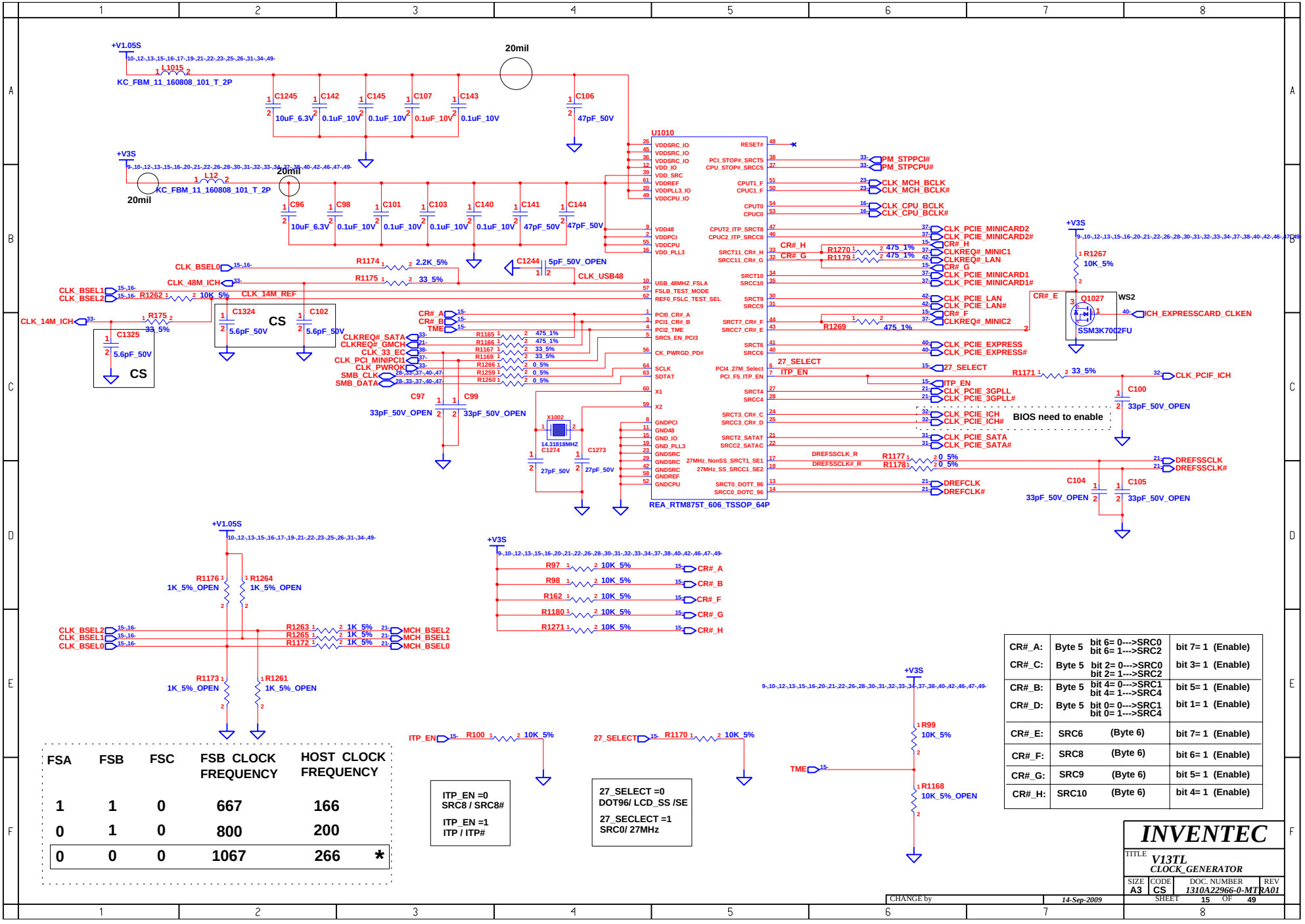

FSA	FSB	FSC	FSB CLOCK FREQUENCY	HOST CLOCK FREQUENCY	
1	1	0	667	166	
0	1	0	800	200	
0	0	0	1067	266	*

CR#_A:	Byte 5	bit 6= 0--->SRC0 bit 6= 1--->SRC2	bit 7= 1 (Enable)
CR#_C:	Byte 5	bit 2= 0--->SRC0 bit 2= 1--->SRC2	bit 3= 1 (Enable)
CR#_B:	Byte 5	bit 4= 0--->SRC1 bit 4= 1--->SRC4	bit 5= 1 (Enable)
CR#_D:	Byte 5	bit 0= 0--->SRC1 bit 0= 1--->SRC4	bit 1= 1 (Enable)
CR#_E:	SRC6	(Byte 6)	bit 7= 1 (Enable)
CR#_F:	SRC8	(Byte 6)	bit 6= 1 (Enable)
CR#_G:	SRC9	(Byte 6)	bit 5= 1 (Enable)
CR#_H:	SRC10	(Byte 6)	bit 4= 1 (Enable)

INVENTEC

TITLE V13TL CLOCK_GENERATOR

SIZE	CODE	DOC. NUMBER	REV
A3	CS	1310A22966-0-MTRA01	

SHEET 15 OF 49

CHANGE by | 14-Sep-2009

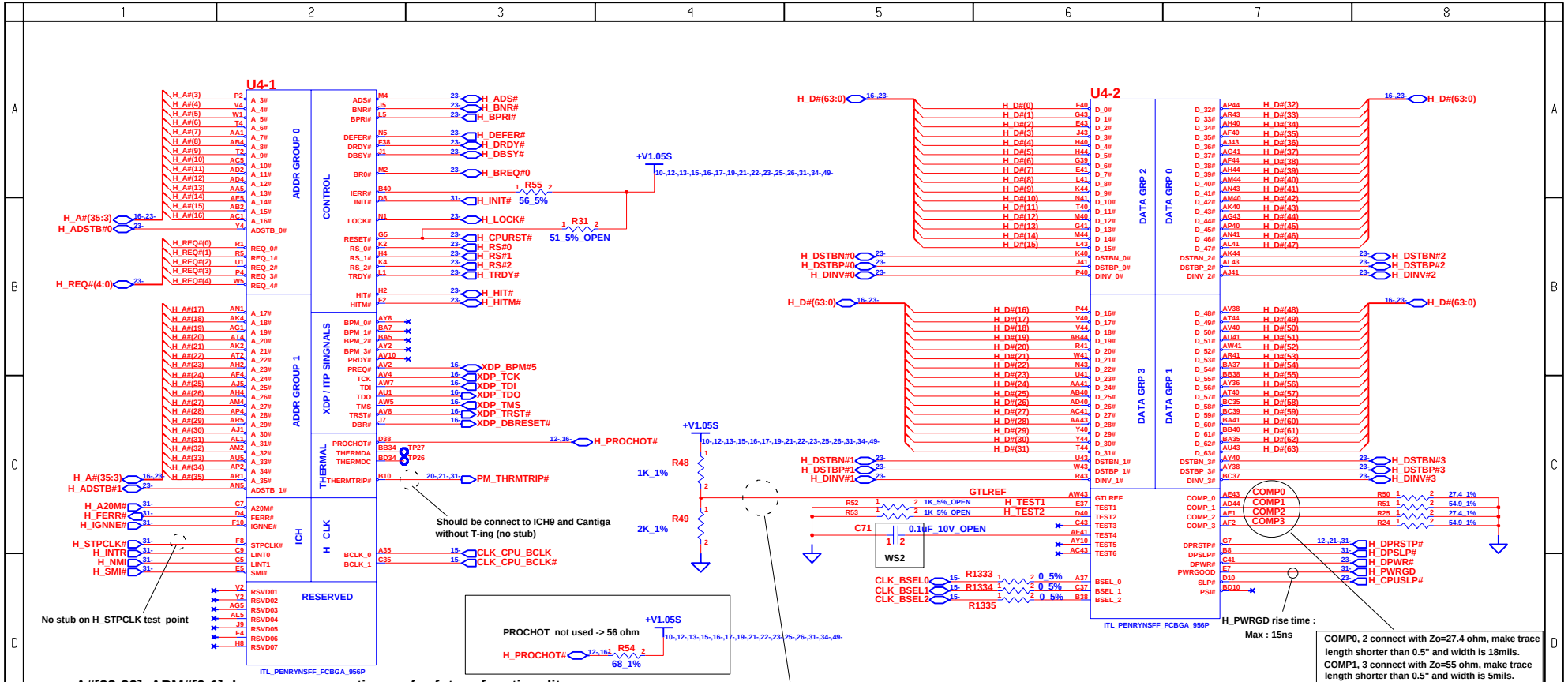

A#[32-39], APM#[0-1]: Leave escape routing on for future functionality

Rout to TP via and place GND via w/in 100mils

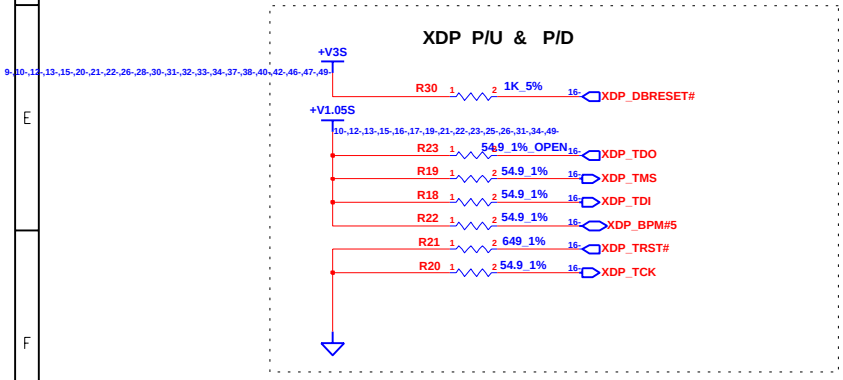

INVENTEC

TITLE	V13TL PENRYN-1		
SIZE	CODE	DOC. NUMBER	REV
A3	CS	1310A22966-0-MTRA01	
CHANGE by		14-Sep-2009	SHEET 16 OF 49

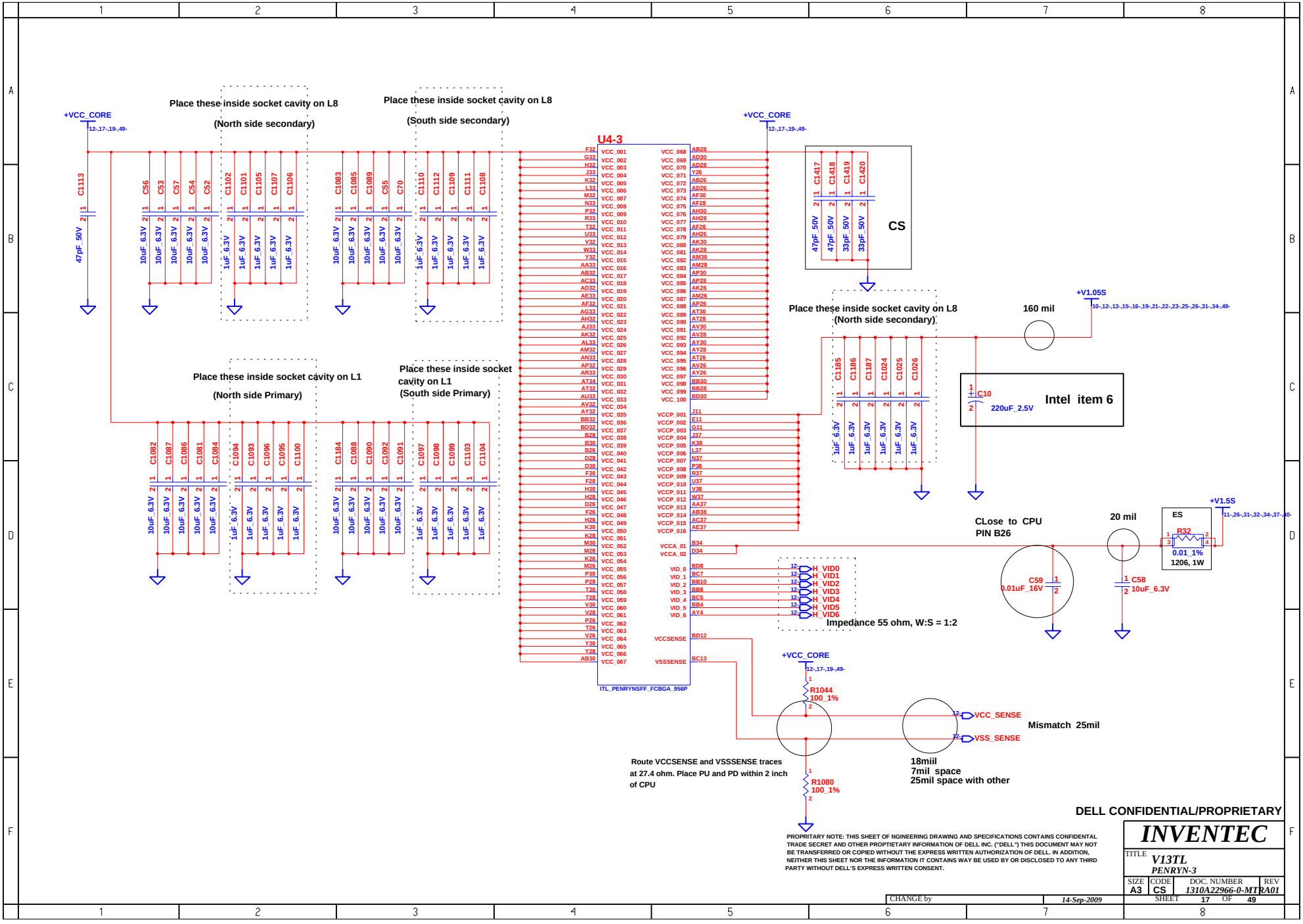

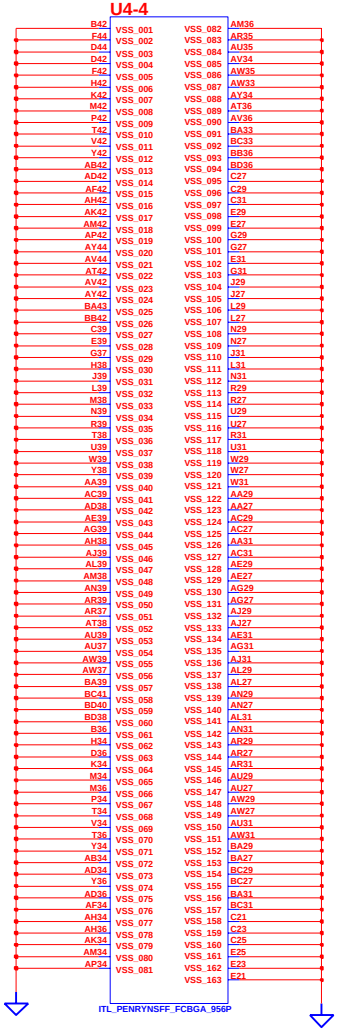

DELL CONFIDENTIAL/PROPRIETARY

INVENTEC

TITLE	*V13TL* *PENRYN-4*		
SIZE	CODE	DOC. NUMBER	REV
A3	CS	*1310A22966-0-MTRA01*	
CHANGE by		*14-Sep-2009*	SHEET 18 OF 49

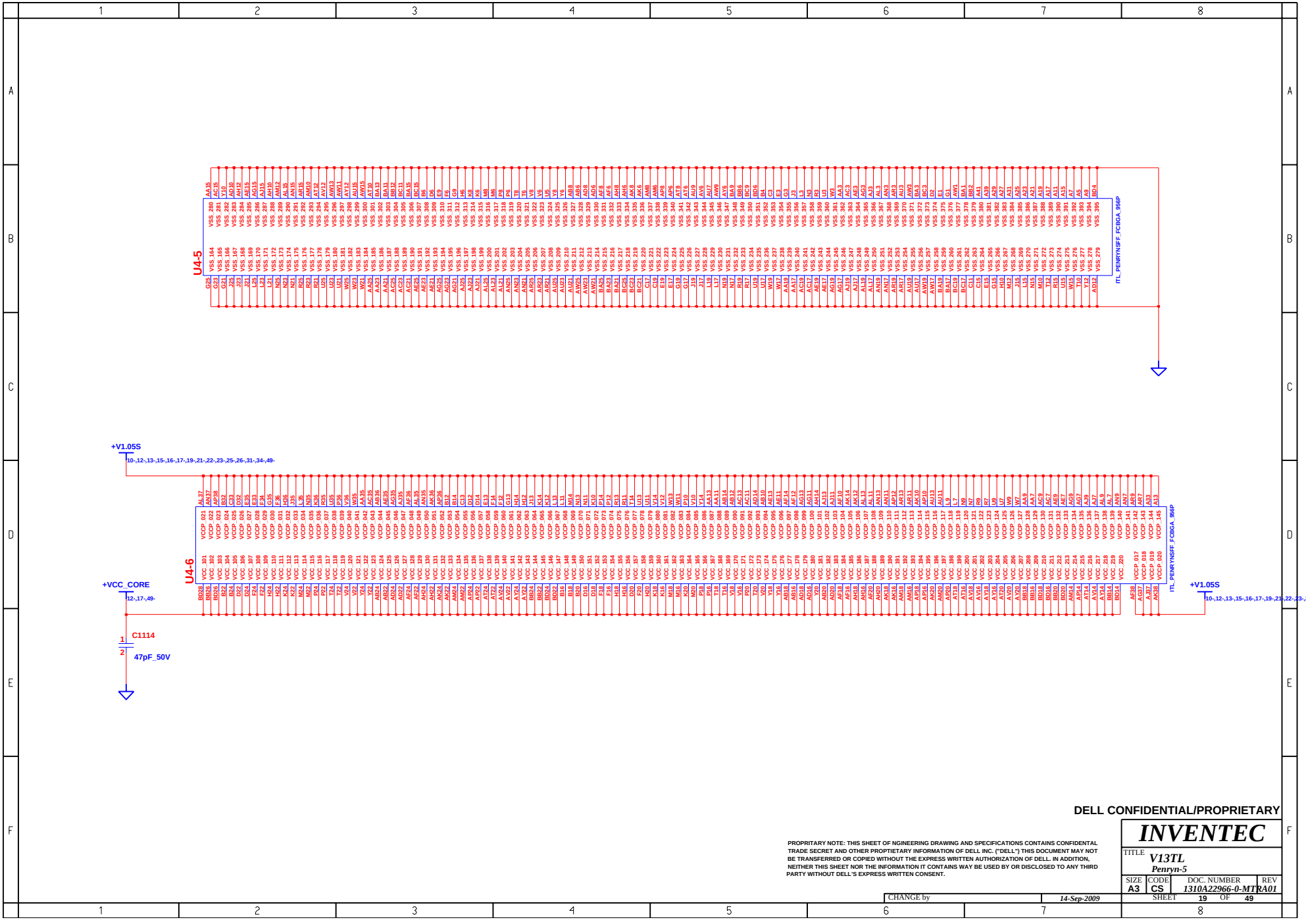

DELL CONFIDENTIAL/PROPRIETARY

PROPRITARY NOTE: THIS SHEET OF NGINEERING DRAWING AND SPECIFICATIONS CONTAINS CONFIDENTAL TRADE SECRET AND OTHER PROPTIETARY INFORMATION OF DELL INC. ("DELL") THIS DOCUMENT MAY NOT BE TRANSFERRED OR COPIED WITHOUT THE EXPRESS WRITTEN AUTHORIZATION OF DELL. IN ADDITION, NEITHER THIS SHEET NOR THE INFORMATION IT CONTAINS WAY BE USED BY OR DISCLOSED TO ANY THIRD PARTY WITHOUT DELL'S EXPRESS WRITTEN CONSENT.

CHANGE by	14-Sep-2009		

INVENTEC

TITLE *V13TL*
Penryn-5

SIZE	CODE	DOC. NUMBER	REV
A3	CS	1310A22966-0-MTRA01	

SHEET 19 OF 49

THERMAL SENSOR

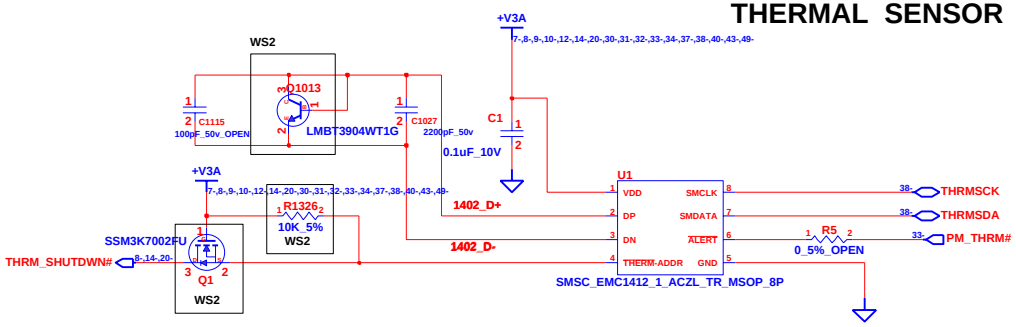

6/10 Change to EMC1412
6019B0643301

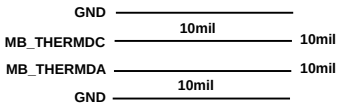

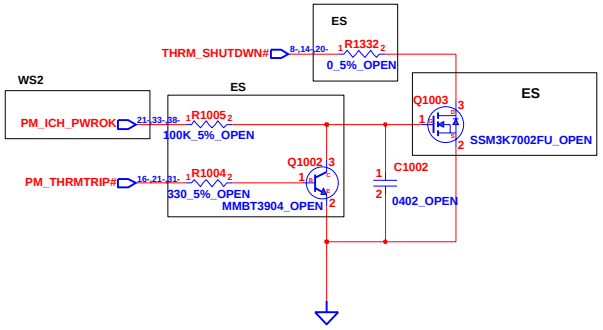

Fan control

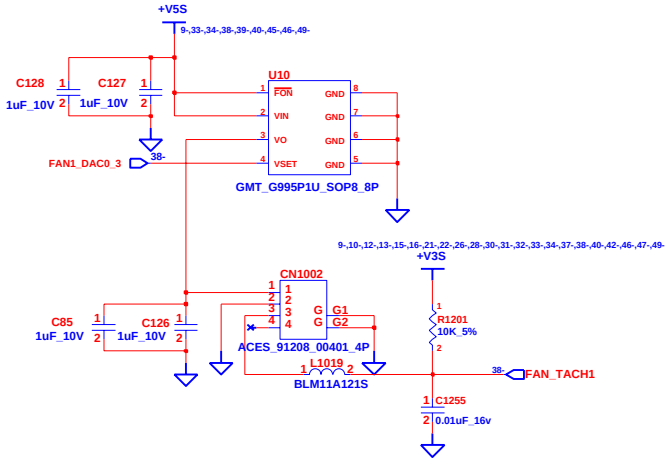

DELL CONFIDENTIAL/PROPRIETARY

INVENTEC

TITLE V13TL
THERMAL & FAN CONTROLLER

SIZE	CODE	DOC. NUMBER	REV
A3	CS	1310A22966-0-MTR	A01

CHANGE by | 14-Sep-2009 | SHEET 20 OF 49

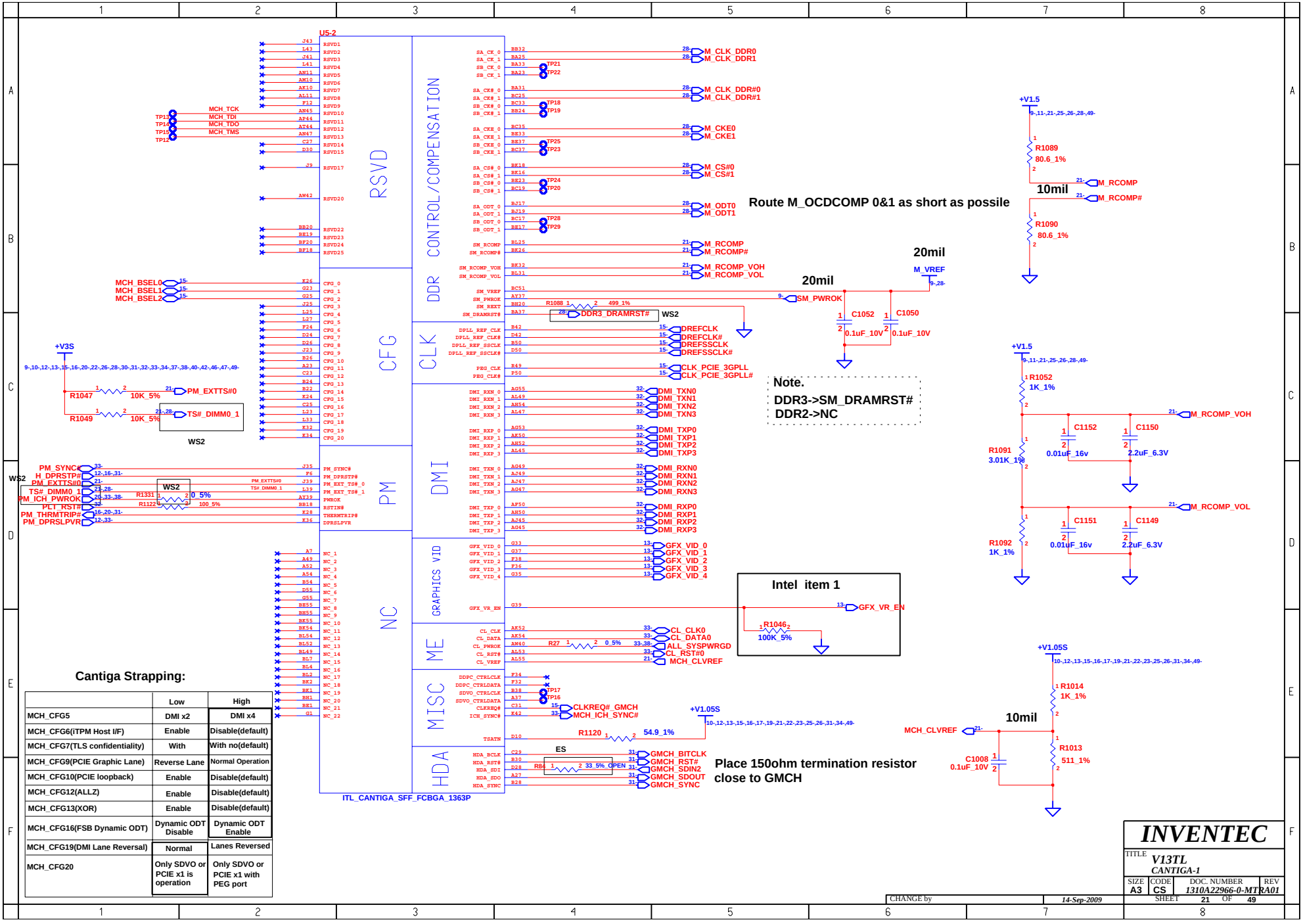

Cantiga Strapping:

	Low	High
MCH_CFG5	DMI x2	DMI x4
MCH_CFG6(iTPM Host I/F)	Enable	Disable(default)
MCH_CFG7(TLS confidentiality)	With	With no(default)
MCH_CFG9(PCIE Graphic Lane)	Reverse Lane	Normal Operation
MCH_CFG10(PCIE loopback)	Enable	Disable(default)
MCH_CFG12(ALLZ)	Enable	Disable(default)
MCH_CFG13(XOR)	Enable	Disable(default)
MCH_CFG16(FSB Dynamic ODT)	Dynamic ODT Disable	Dynamic ODT Enable
MCH_CFG19(DMI Lane Reversal)	Normal	Lanes Reversed
MCH_CFG20	Only SDVO or PCIE x1 is operation	Only SDVO or PCIE x1 with PEG port

INVENTEC				
TITLE V13TL CANTIGA-1				
SIZE A3	CODE CS	DOC. NUMBER 1310A22966-0-MTRA01		REV
CHANGE by		14-Sep-2009	SHEET 21 OF 49	

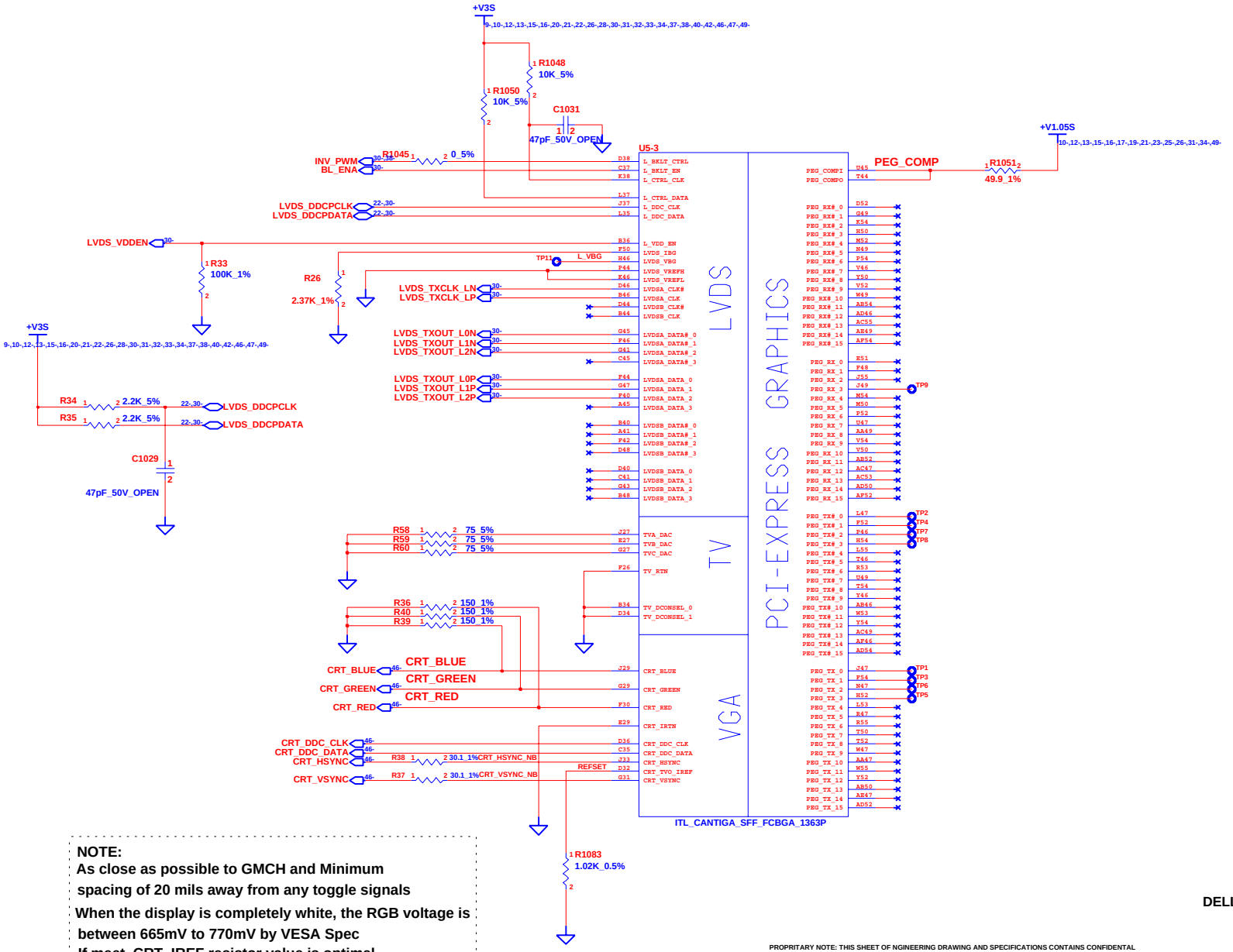

NOTE:
As close as possible to GMCH and Minimum spacing of 20 mils away from any toggle signals
When the display is completely white, the RGB voltage is between 665mV to 770mV by VESA Spec
If meet, CRT_IREF resistor value is optimal

DELL CONFIDENTIAL/PROPRIETARY

CHANGE by		14-Sep-2009	

INVENTEC

TITLE *V13TL CANTIGA-2*

SIZE	CODE	DOC. NUMBER	REV
A3	CS	1310A22966-0-MTR	A01

SHEET 22 OF 49

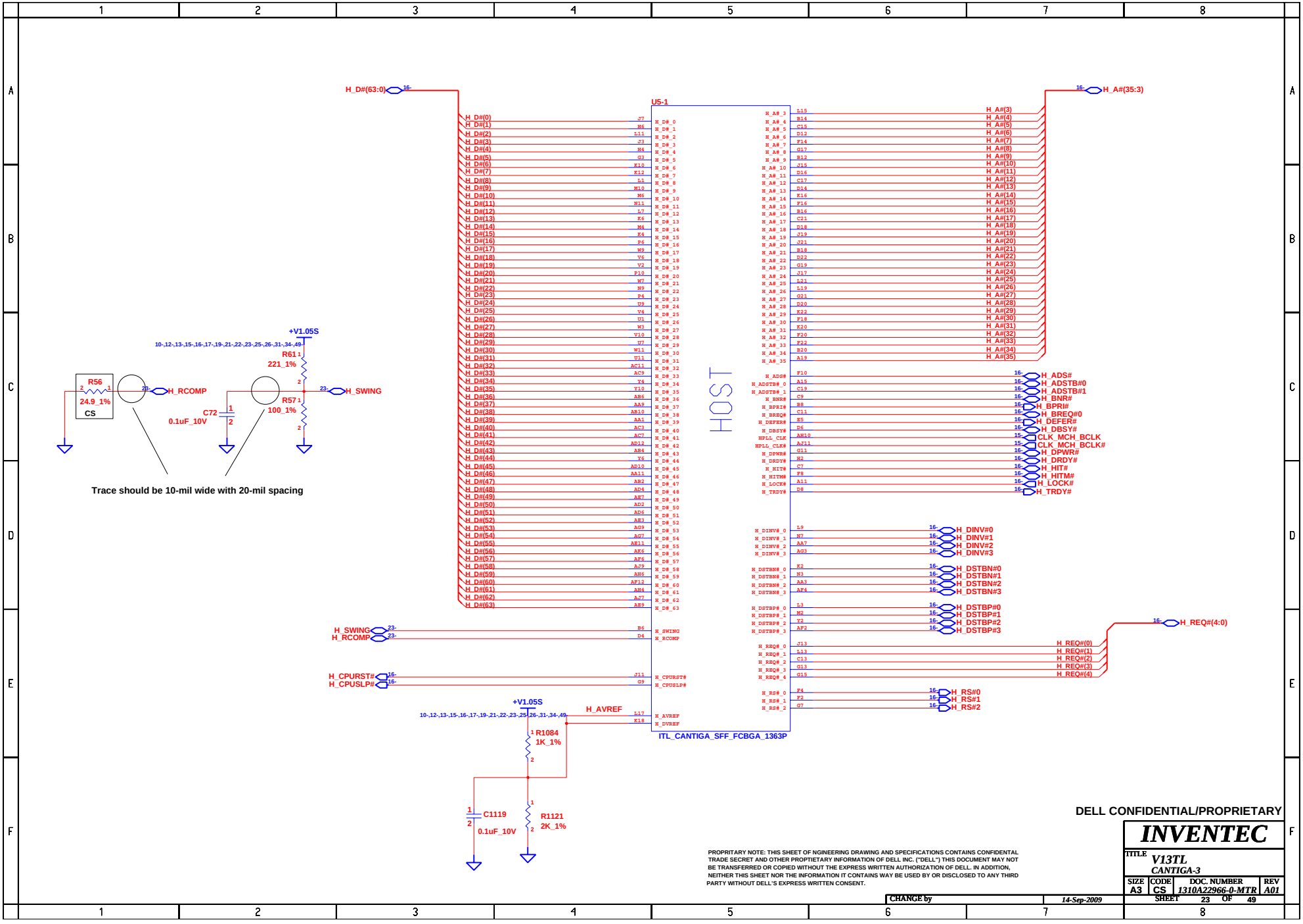

DELL CONFIDENTIAL/PROPRIETARY

PROPRITARY NOTE: THIS SHEET OF NGINEERING DRAWING AND SPECIFICATIONS CONTAINS CONFIDENTAL TRADE SECRET AND OTHER PROPTIETARY INFORMATION OF DELL INC. ("DELL") THIS DOCUMENT MAY NOT BE TRANSFERRED OR COPIED WITHOUT THE EXPRESS WRITTEN AUTHORIZATION OF DELL. IN ADDITION, NEITHER THIS SHEET NOR THE INFORMATION IT CONTAINS WAY BE USED BY OR DISCLOSED TO ANY THIRD PARTY WITHOUT DELL'S EXPRESS WRITTEN CONSENT.

CHANGE by		14-Sep-2009	

INVENTEC

TITLE *V13TL CANTIGA-3*

SIZE	CODE	DOC. NUMBER	REV
A3	CS	1310A22966-0-MTR	A01

SHEET 23 OF 49

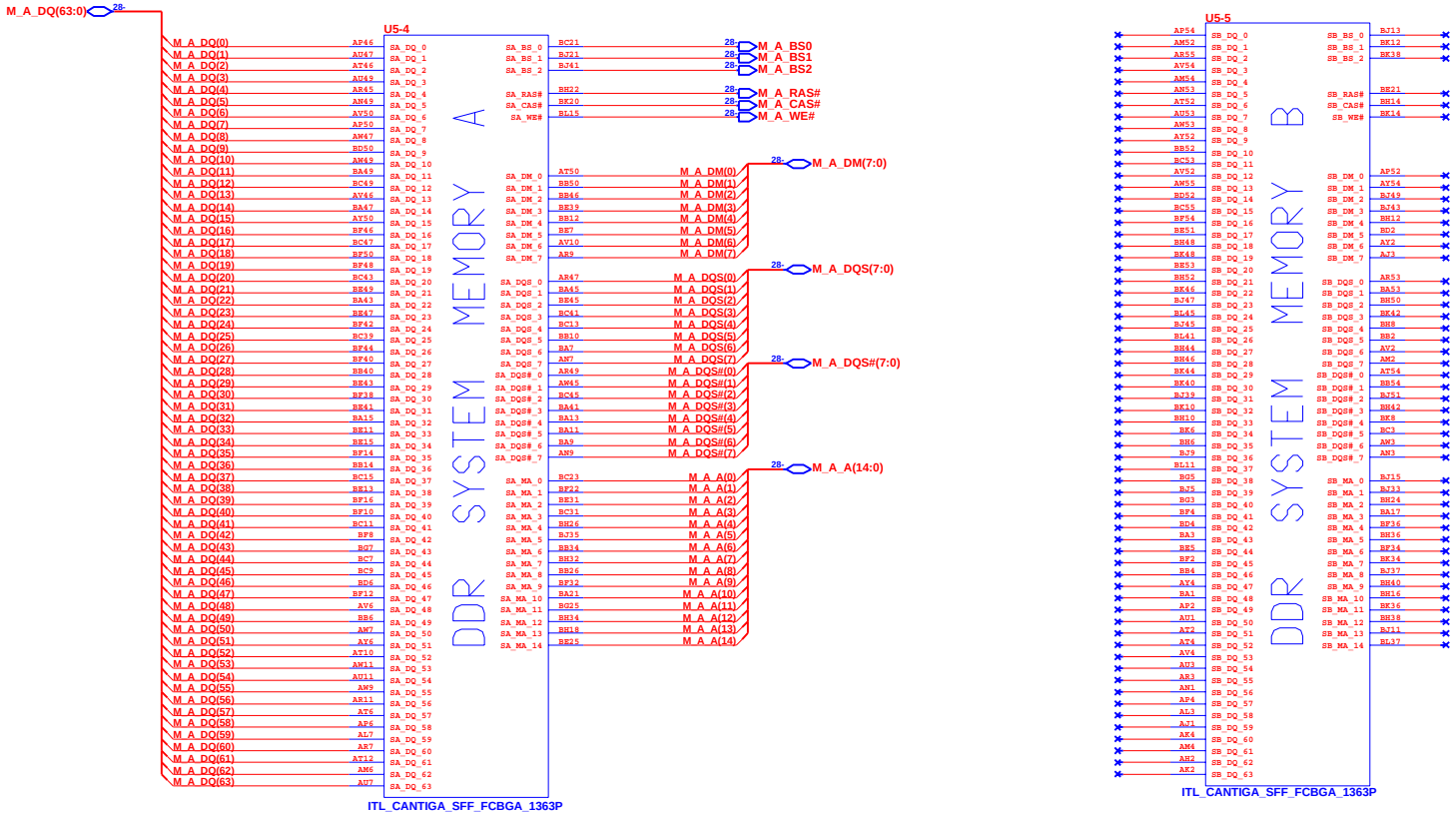

DELL CONFIDENTIAL/PROPRIETARY

INVENTEC

TITLE: V13TL
CANTIGA-4-DDR2

SIZE	CODE	DOC. NUMBER	REV
A3	CS	1310A22966-0-MTRA01	

CHANGE by | 14-Sep-2009

SHEET 24 OF 49

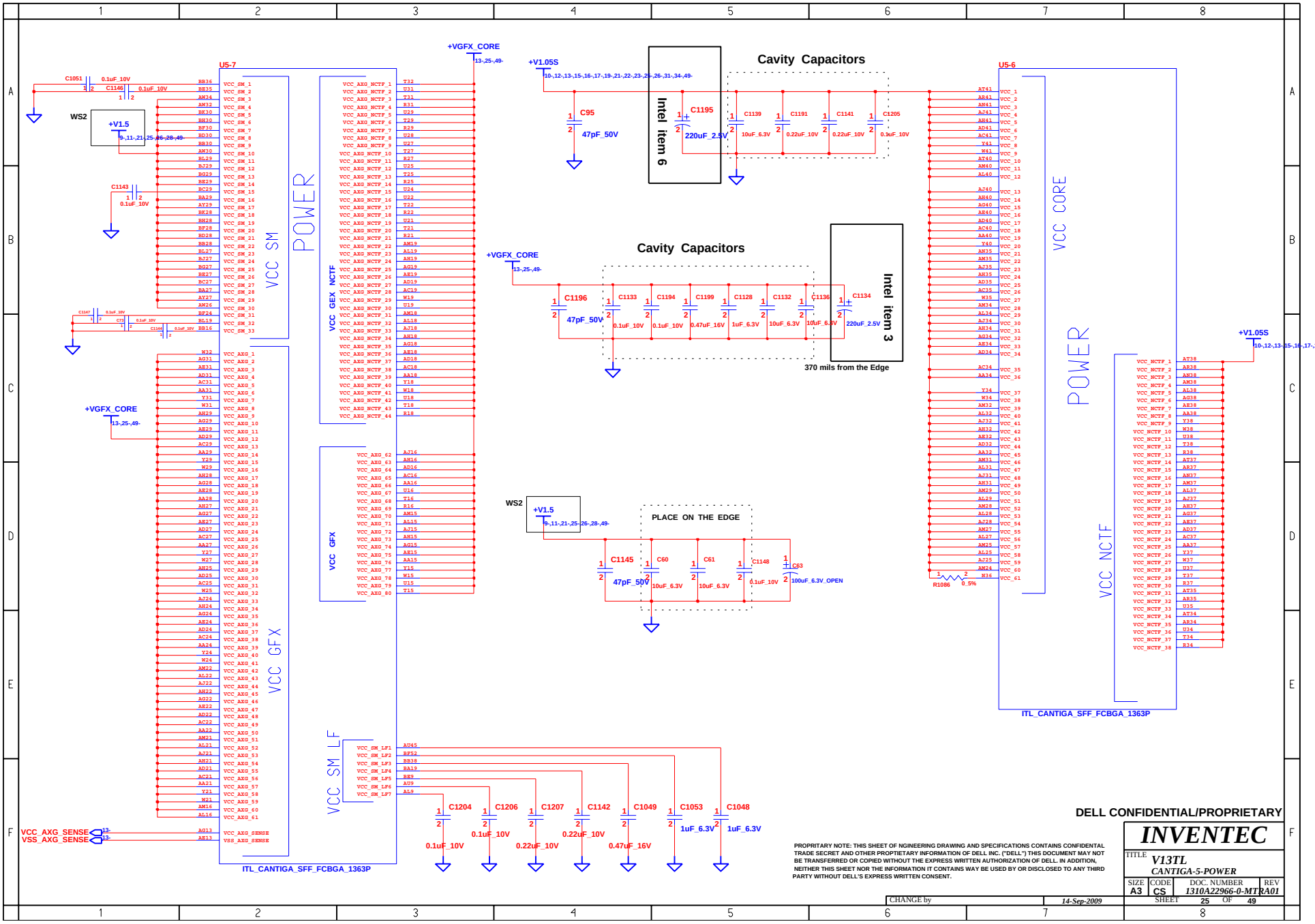

DELL CONFIDENTIAL/PROPRIETARY

PROPRITARY NOTE: THIS SHEET OF NGINEERING DRAWING AND SPECIFICATIONS CONTAINS CONFIDENTAL TRADE SECRET AND OTHER PROPTIETARY INFORMATION OF DELL INC. ("DELL") THIS DOCUMENT MAY NOT BE TRANSFERRED OR COPIED WITHOUT THE EXPRESS WRITTEN AUTHORIZATION OF DELL. IN ADDITION, NEITHER THIS SHEET NOR THE INFORMATION IT CONTAINS WAY BE USED BY OR DISCLOSED TO ANY THIRD PARTY WITHOUT DELL'S EXPRESS WRITTEN CONSENT.

INVENTEC

TITLE: *V13TL CANTIGA-5-POWER*

SIZE	CODE	DOC. NUMBER	REV
A3	CS	1310A22966-0-MTRA01	

CHANGE by | 14-Sep-2009 | SHEET 25 OF 49

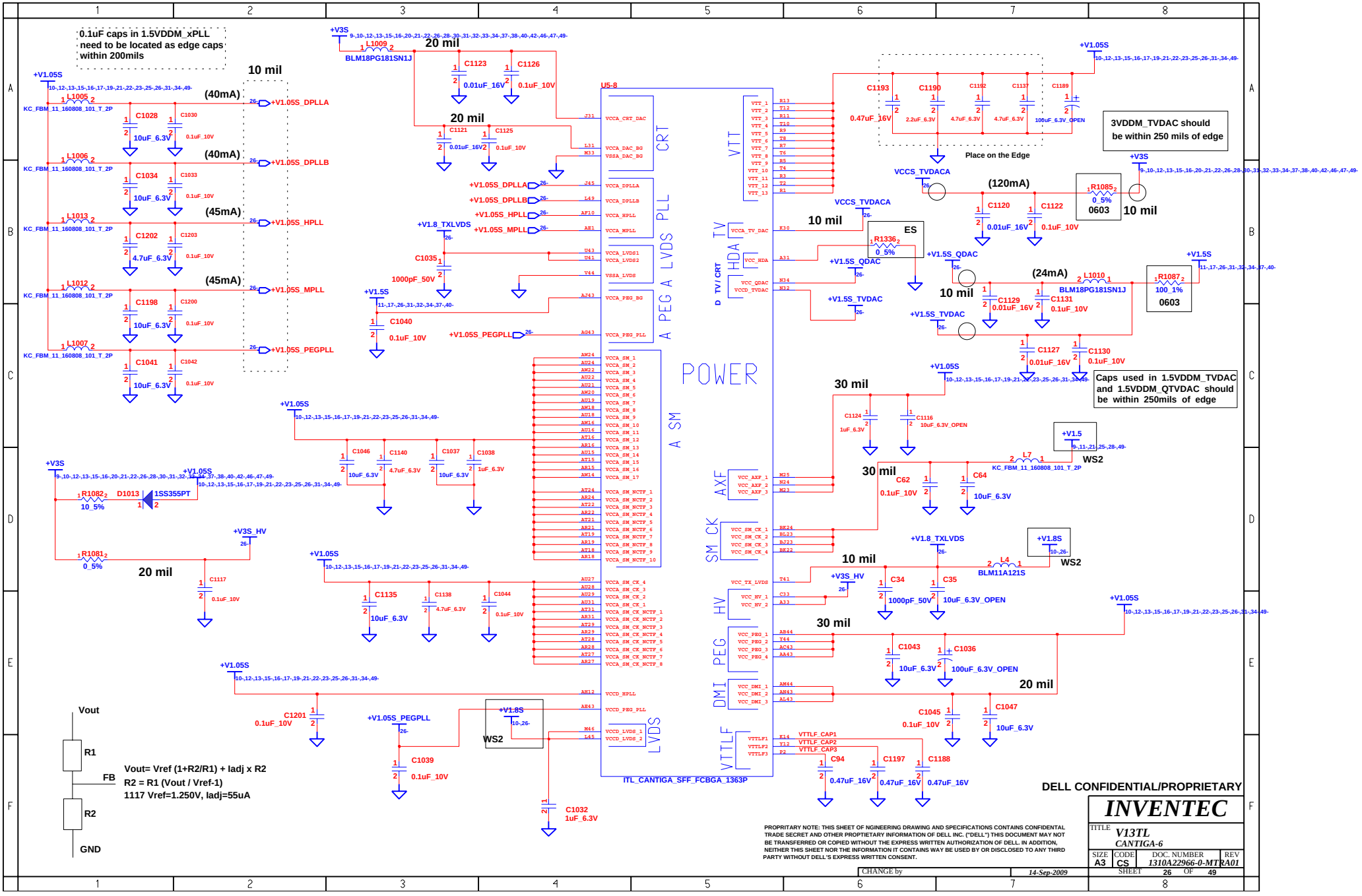

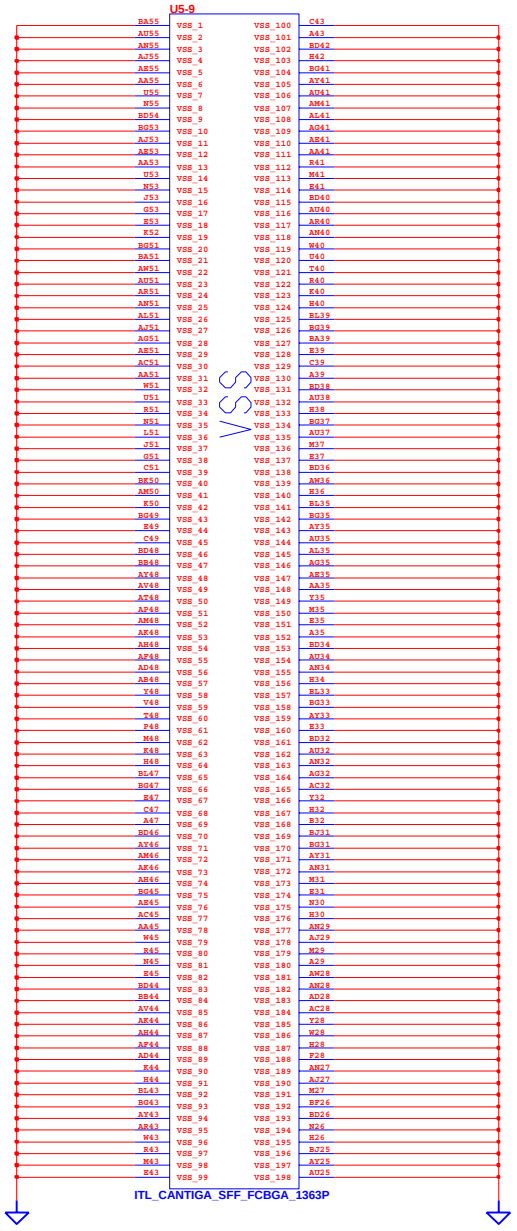

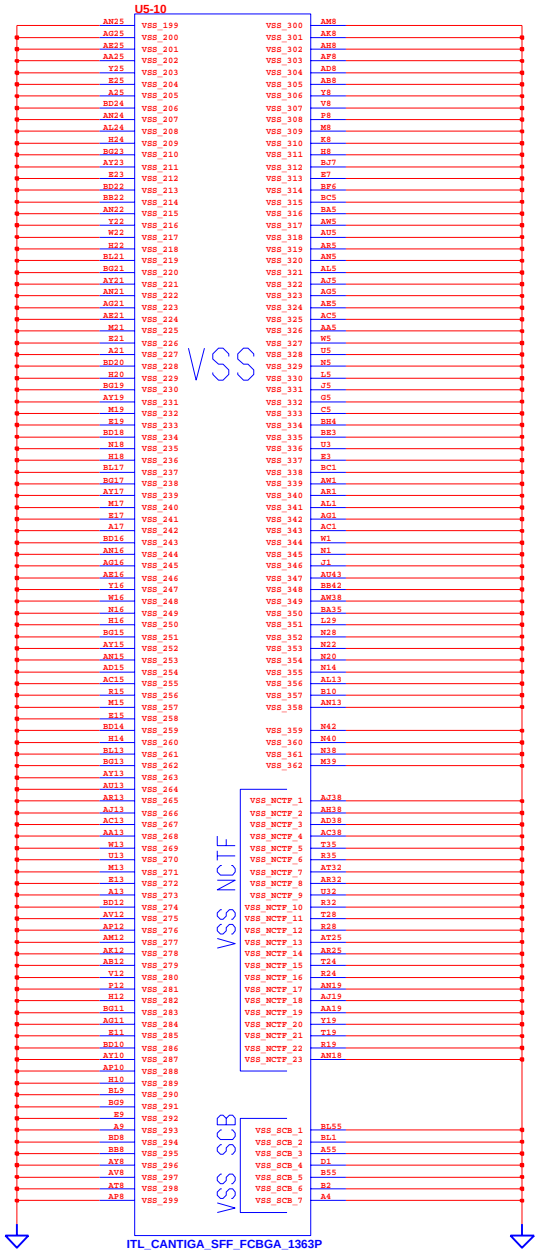

INVENTEC

TITLE V13TL
CANTIGA-POWER

SIZE	CODE	DOC. NUMBER	REV
A3	CS	1310A22966-0-MTRA01	

CHANGE by | 14-Sep-2009 | SHEET 27 OF 49

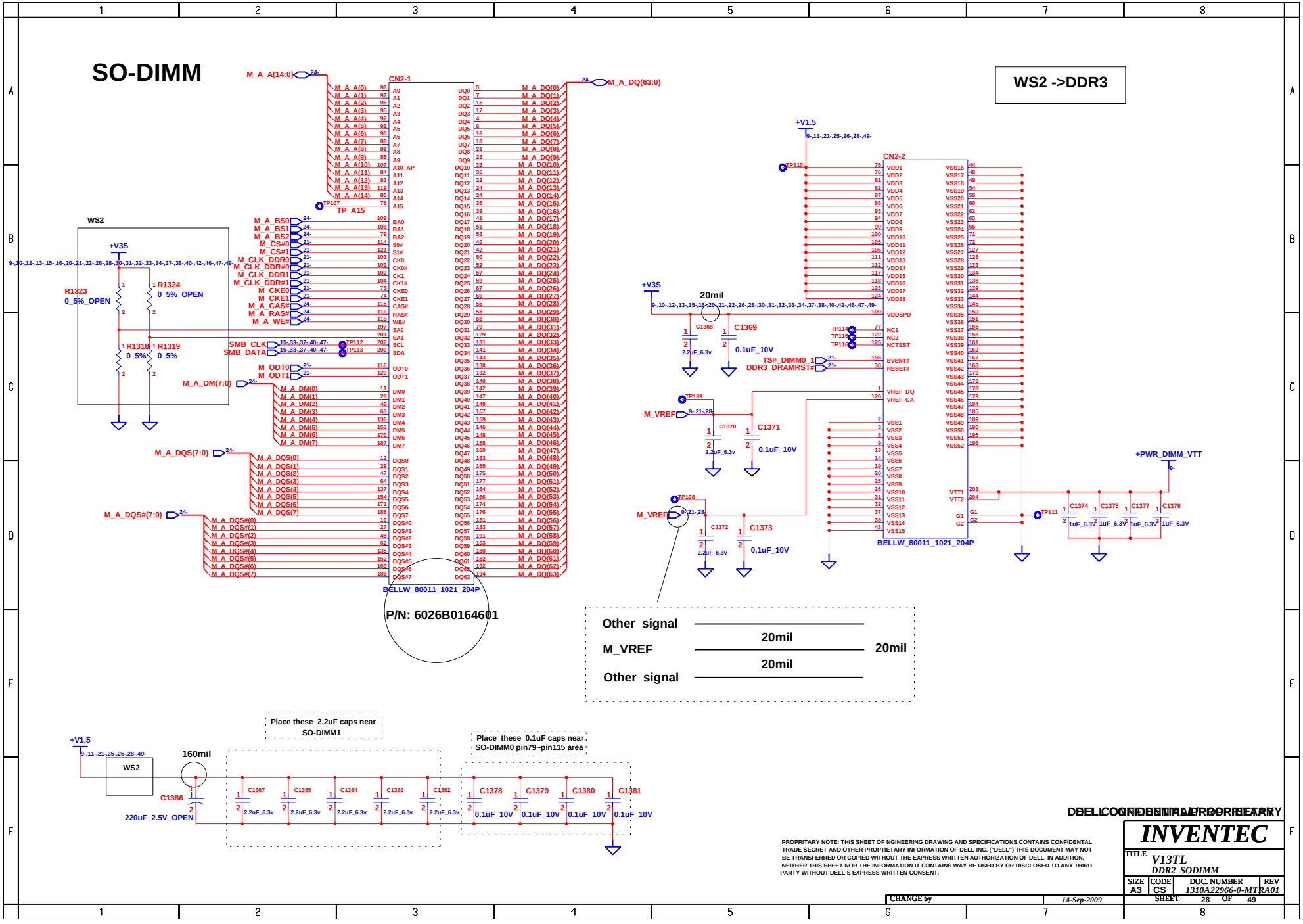

PROPRIETARY NOTE: THIS SHEET OF ENGINEERING DRAWING AND SPECIFICATIONS CONTAINS CONFIDENTIAL TRADE SECRET AND OTHER PROPRIETARY INFORMATION OF DELL INC. ("DELL") THIS DOCUMENT MAY NOT BE TRANSFERRED OR COPIED WITHOUT THE EXPRESS WRITTEN AUTHORIZATION OF DELL. IN ADDITION, NEITHER THIS SHEET NOR THE INFORMATION IT CONTAINS WAY BE USED BY OR DISCLOSED TO ANY THIRD PARTY WITHOUT DELL'S EXPRESS WRITTEN CONSENT.

WS2 ->DDR3

BLANK

INVENTEC			
TITLE V13TL DDR DAMPING			
SIZE A3	CODE CS	DOC. NUMBER 1310A22966-0-MTR	REV A01
CHANGE by	14-Sep-2009	SHEET 29 OF 49	

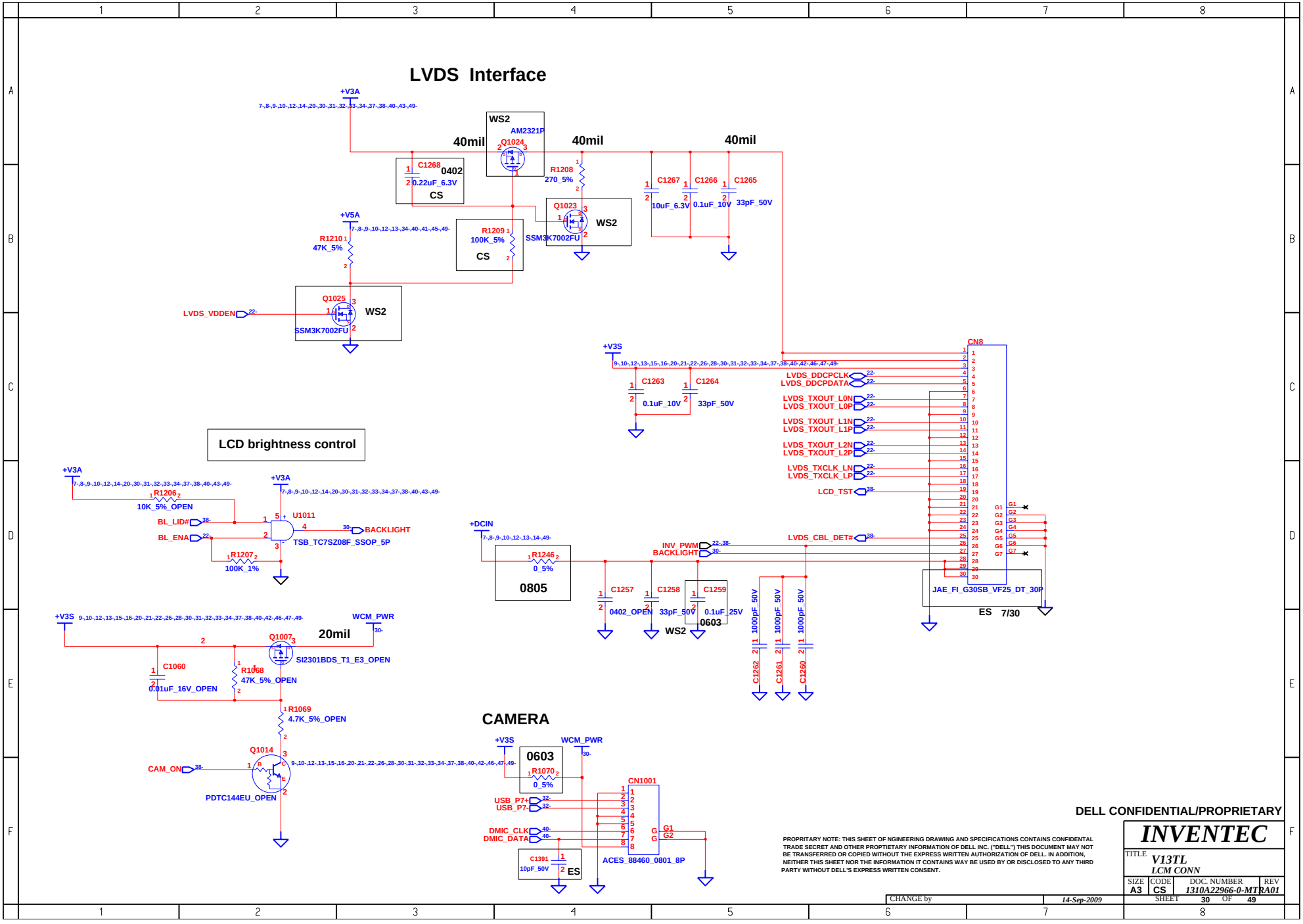

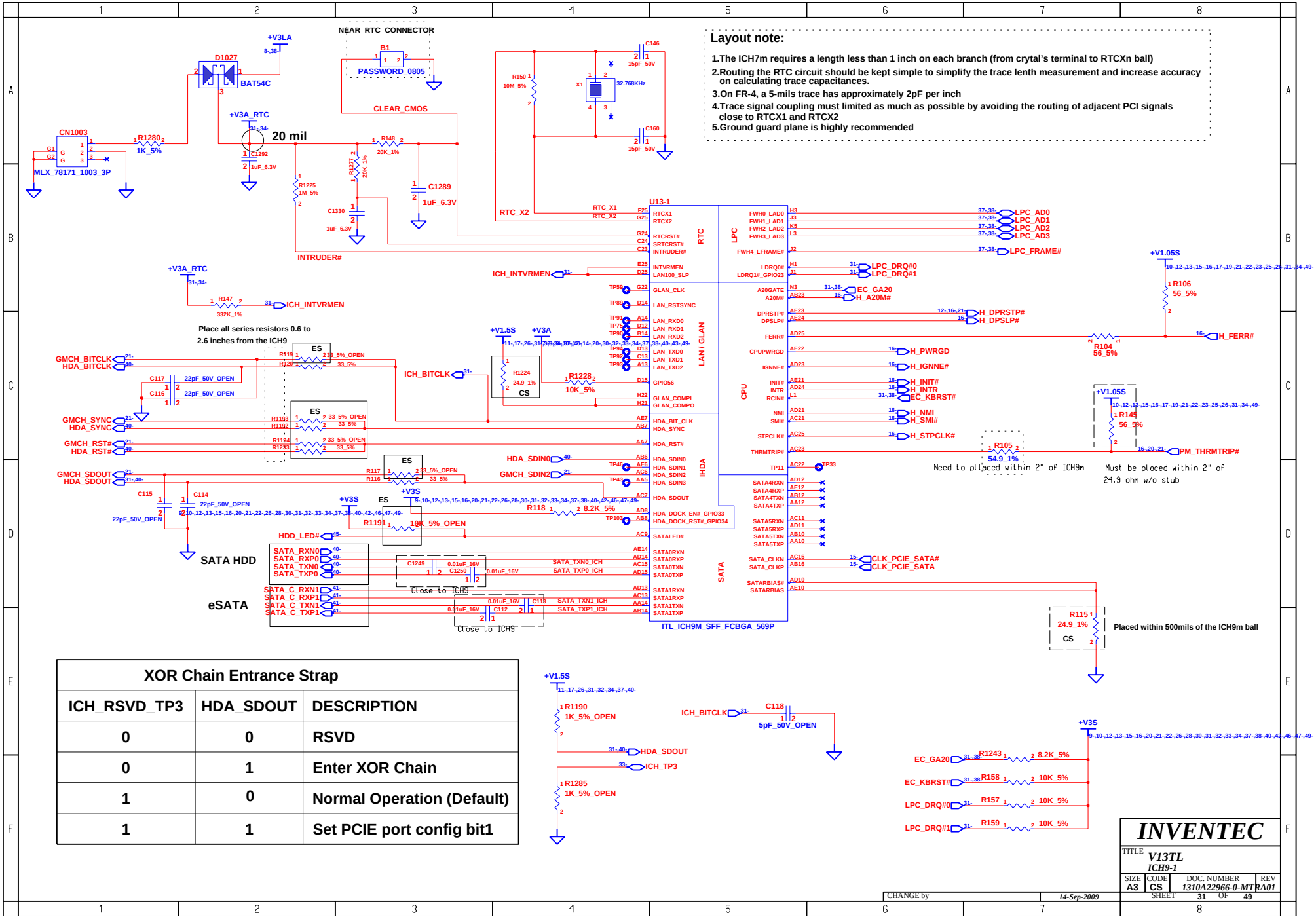

Layout note:

1. The ICH7m requires a length less than 1 inch on each branch (from crytal's terminal to RTCXn ball)
2. Routing the RTC circuit should be kept simple to simplify the trace lenth measurement and increase accuracy on calculating trace capacitances.
3. On FR-4, a 5-mils trace has approximately 2pF per inch
4. Trace signal coupling must limited as much as possible by avoiding the routing of adjacent PCI signals close to RTCX1 and RTCX2
5. Ground guard plane is highly recommended

XOR Chain Entrance Strap		
ICH_RSVD_TP3	HDA_SDOUT	DESCRIPTION
0	0	RSVD
0	1	Enter XOR Chain
1	0	Normal Operation (Default)
1	1	Set PCIE port config bit1

INVENTEC

TITLE: V13TL
ICH9-1

SIZE	CODE	DOC. NUMBER	REV
A3	CS	1310A22966-0-MTRA01	

SHEET 31 OF 49

CHANGE by | 14-Sep-2009

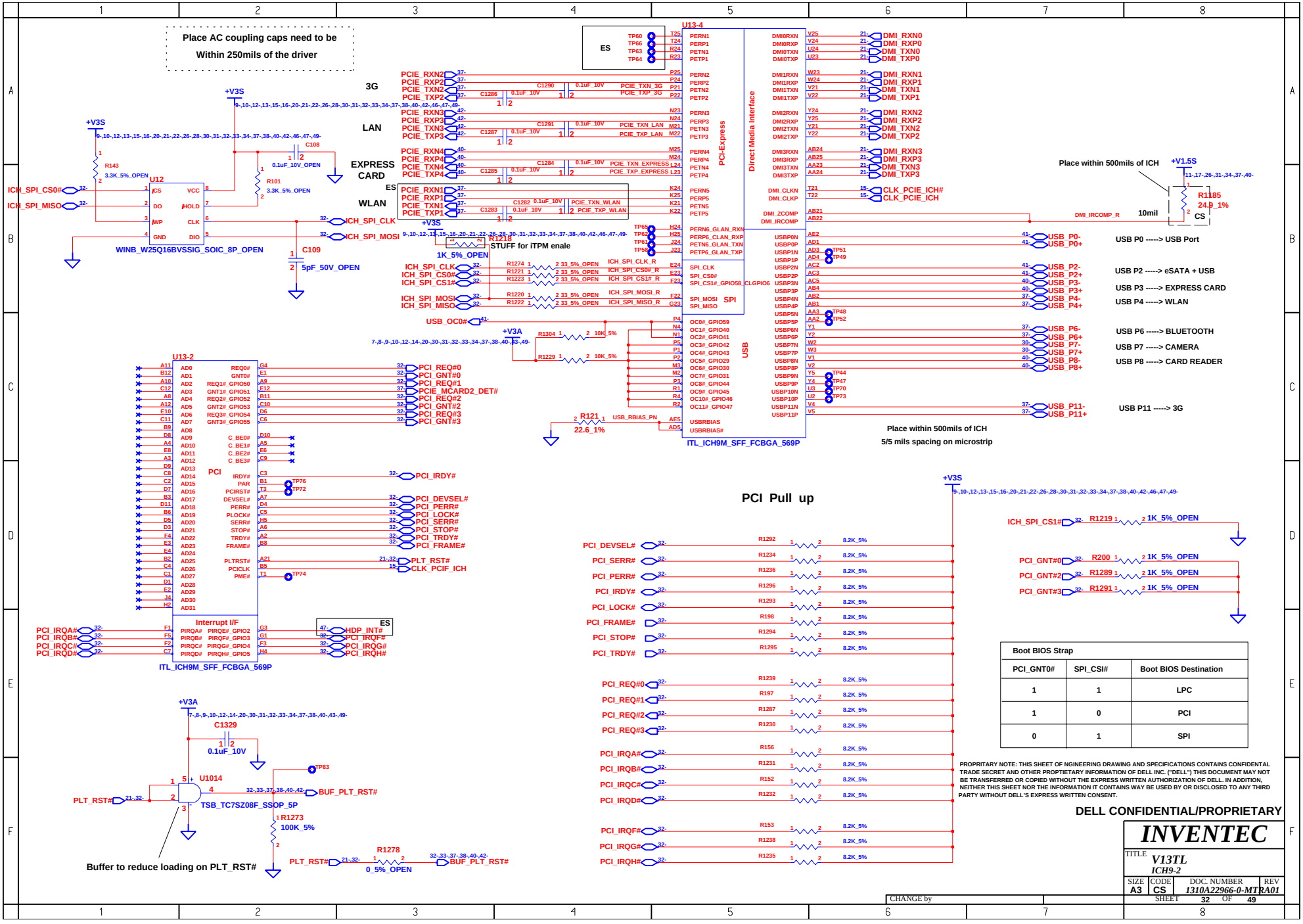

Boot BIOS Strap		
PCI_GNT0#	SPI_CSI#	Boot BIOS Destination
1	1	LPC
1	0	PCI
0	1	SPI

INVENTEC

TITLE: V13TL ICH9-2

SIZE	CODE	DOC. NUMBER	REV
A3	CS	1310A22966-0-MTRA01	

SHEET 32 OF 49

CHANGE by

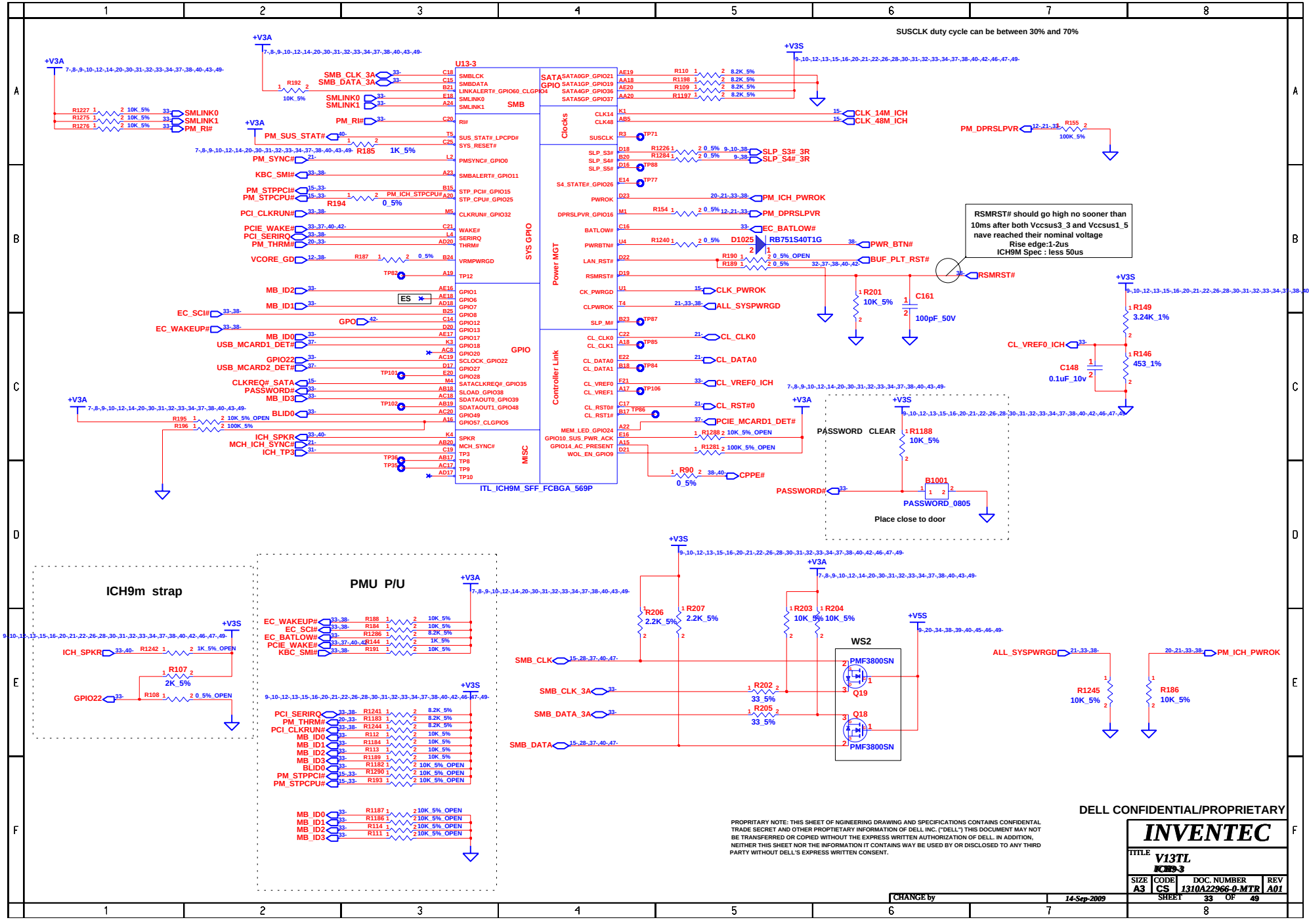

PROPRITARY NOTE: THIS SHEET OF NGINEERING DRAWING AND SPECIFICATIONS CONTAINS CONFIDENTAL TRADE SECRET AND OTHER PROPTIETARY INFORMATION OF DELL INC. ("DELL") THIS DOCUMENT MAY NOT BE TRANSFERRED OR COPIED WITHOUT THE EXPRESS WRITTEN AUTHORIZATION OF DELL. IN ADDITION, NEITHER THIS SHEET NOR THE INFORMATION IT CONTAINS WAY BE USED BY OR DISCLOSED TO ANY THIRD PARTY WITHOUT DELL'S EXPRESS WRITTEN CONSENT.

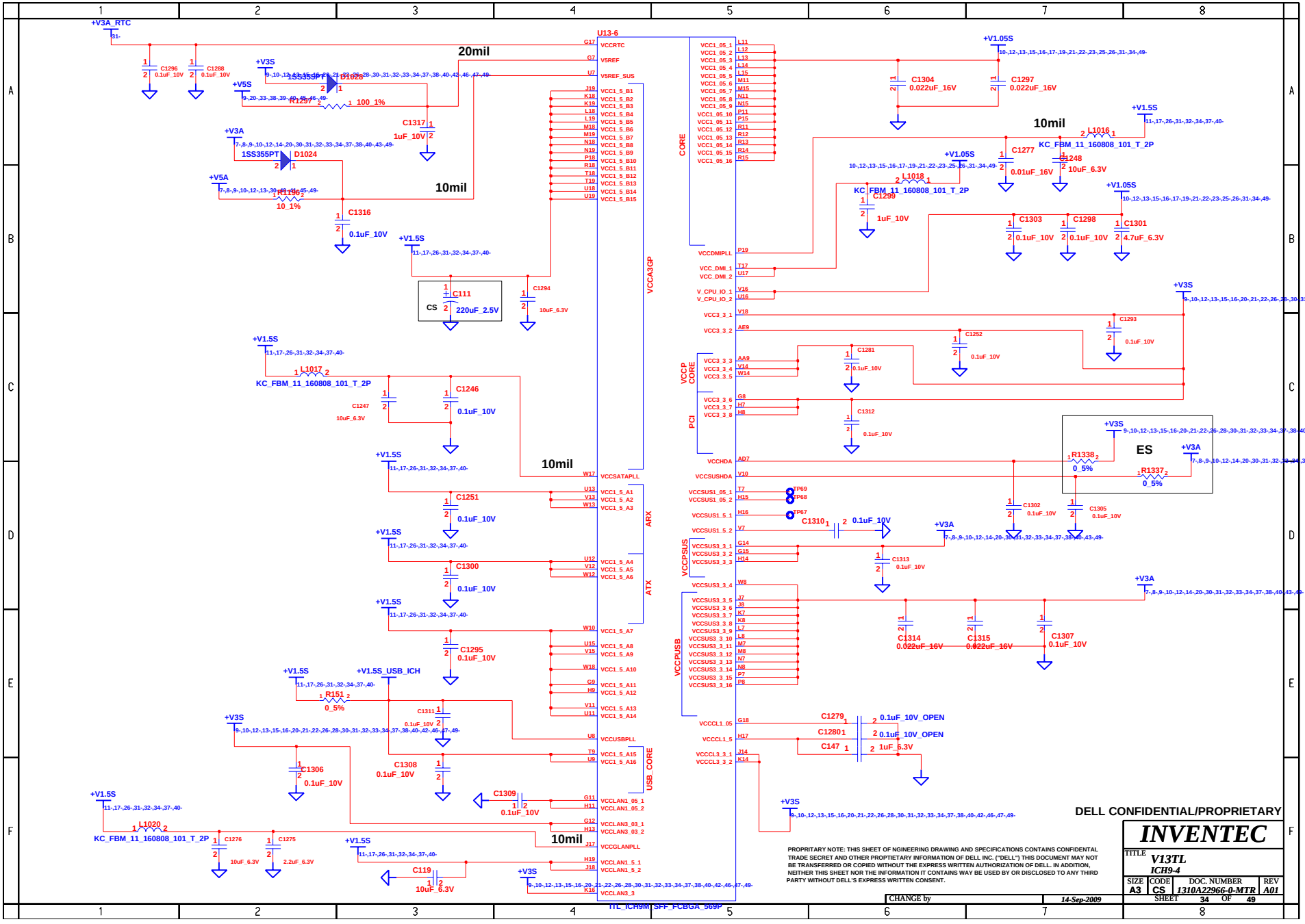

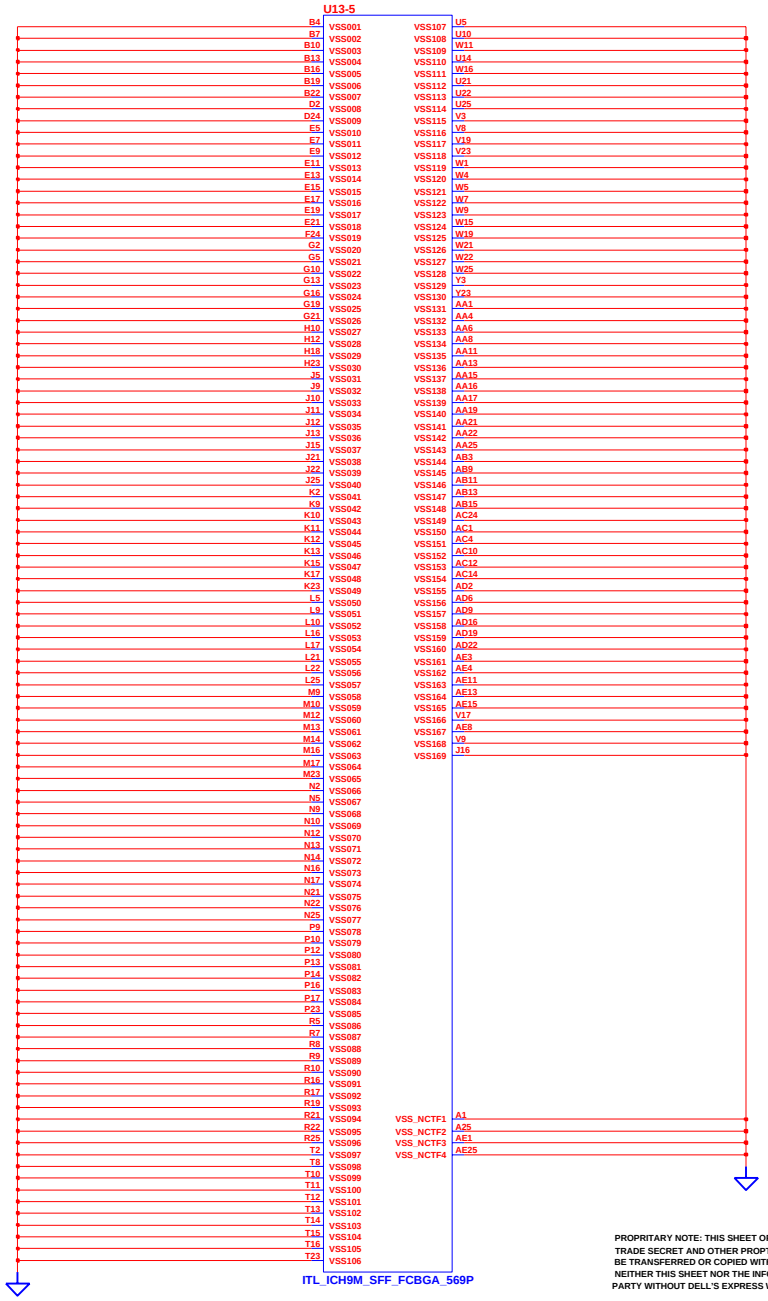

DELL CONFIDENTIAL/PROPRIETARY

INVENTEC

TITLE *V13TL*
ICH9-5

SIZE	CODE	DOC. NUMBER	REV
A3	CS	*1310A22966-0-MTRA01*	

CHANGE by | *14-Sep-2009* | SHEET 35 OF 49

BLANK

INVENTEC							
TITLE	V13TL HDD CONN						
SIZE	CODE	DOC. NUMBER					REV
A3	CS	1310A22966-0-MTRA01					
CHANGE by			14-Sep-2009	SHEET 36 OF 49			

PCIE Mini Card for 3G

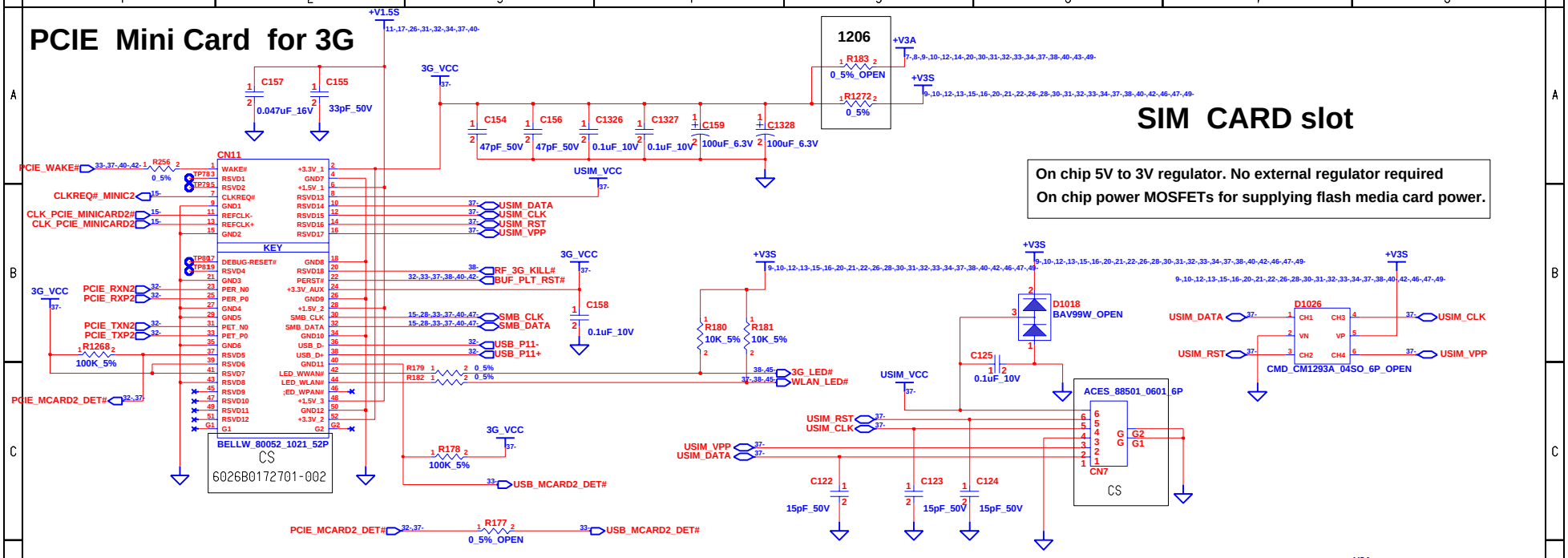

SIM CARD slot

On chip 5V to 3V regulator. No external regulator required
On chip power MOSFETs for supplying flash media card power.

Bluetooth CONN

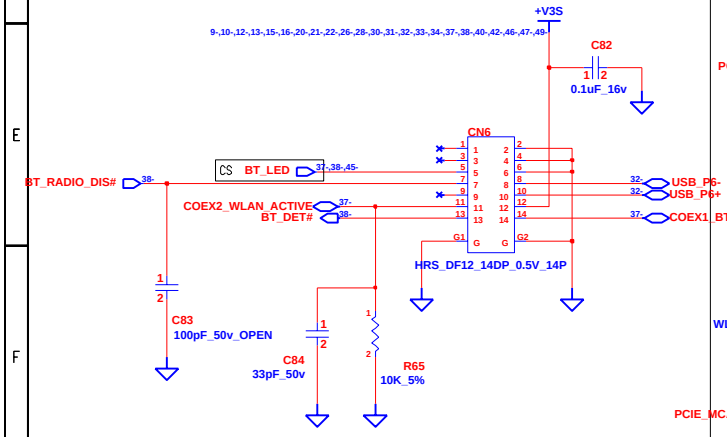

PCIE Mini Card (WLAN)

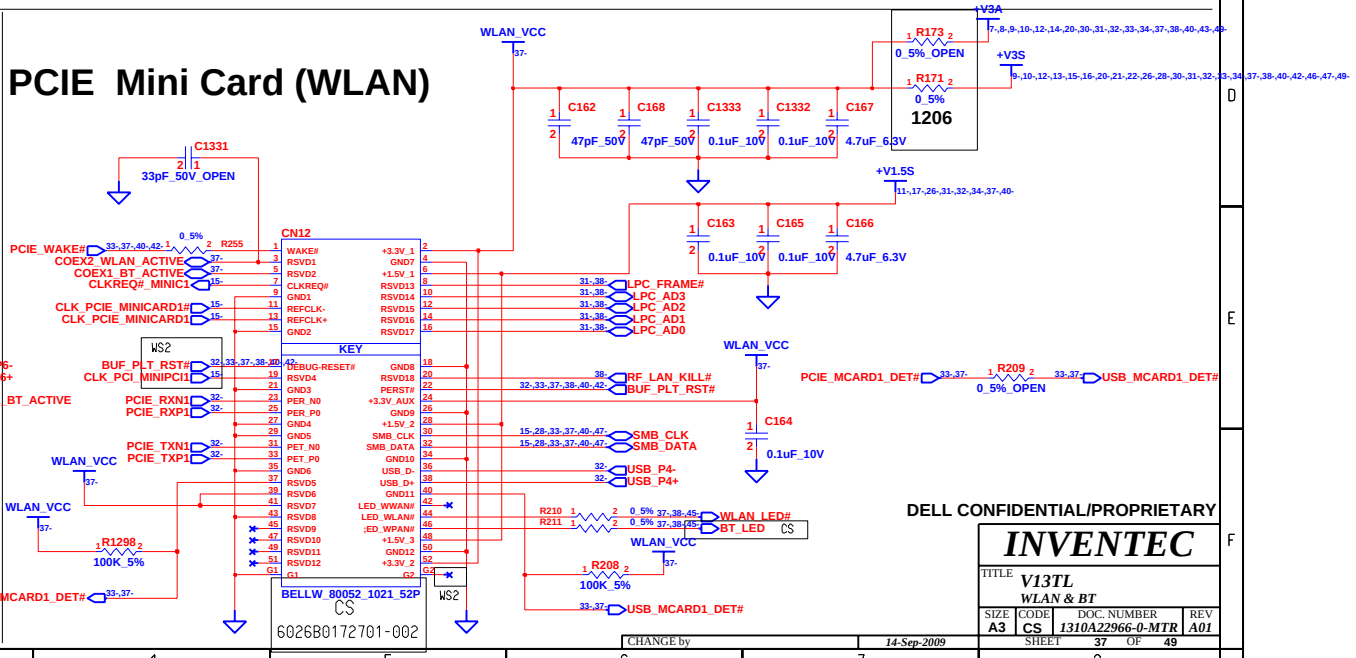

DELL CONFIDENTIAL/PROPRIETARY

INVENTEC

TITLE	V13TL WLAN & BT		
SIZE A3	CODE CS	DOC. NUMBER 1310A22966-0-MTR	REV A01
CHANGE by		14-Sep-2009	SHEET 37 OF 49

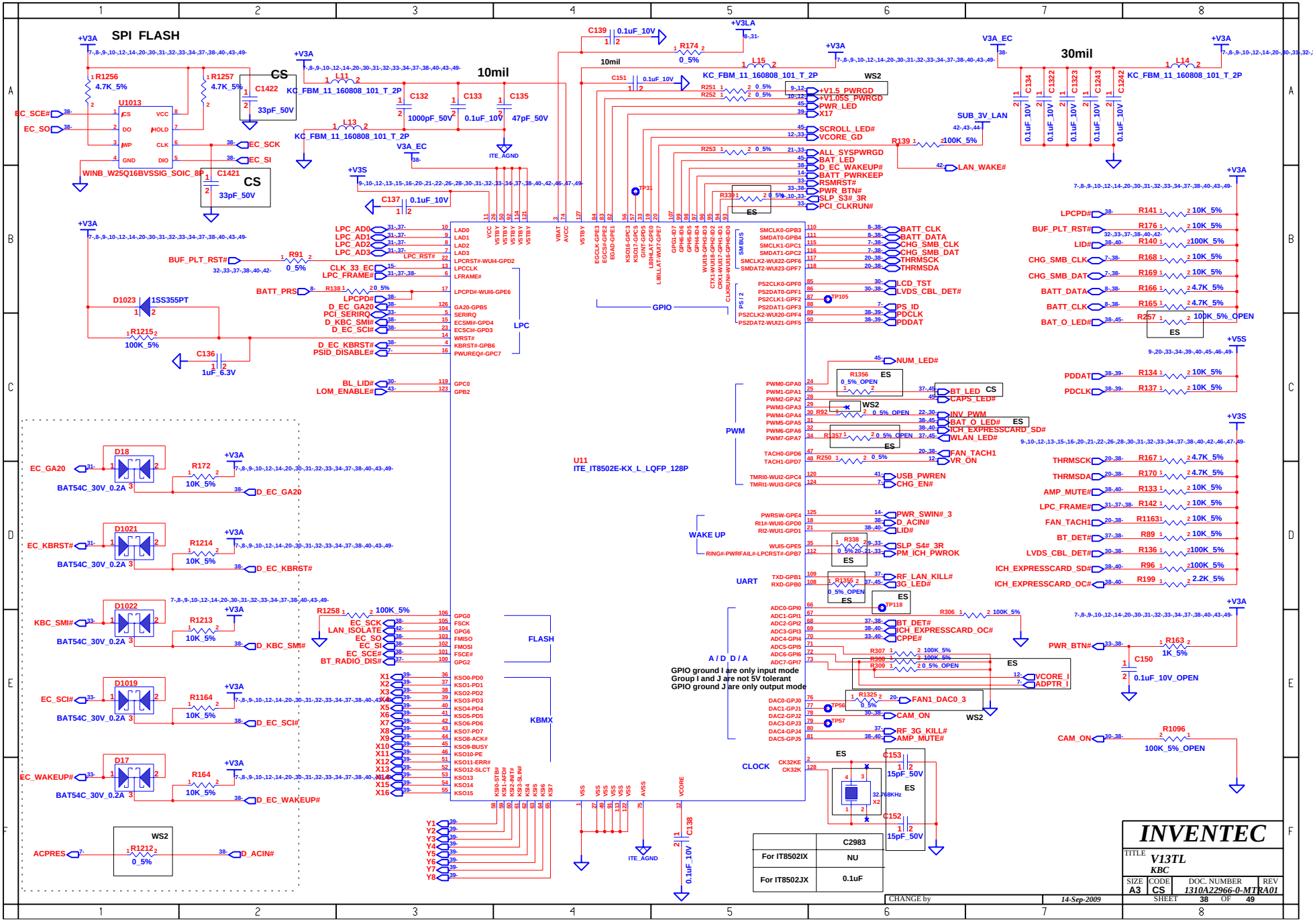

	C2983
For IT8502IX	NU
For IT8502JX	0.1uF

TP CONN

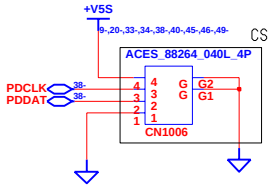

K/B CONN

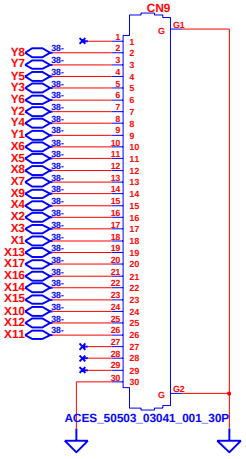

INVENTEC			
TITLE *V13TL* *K/B & TouchPad*			
SIZE A3	CODE CS	DOC. NUMBER *1310A22966-0-MTR*	REV *A01*
CHANGE by	*14-Sep-2009*	SHEET 39 OF 49	

Conn to LED BOARD

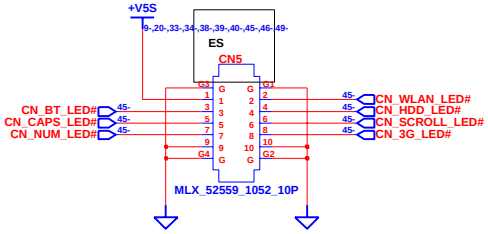

Conn to HALL SENSOR BOARD

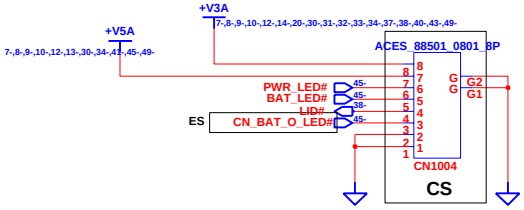

Conn to CR BOARD

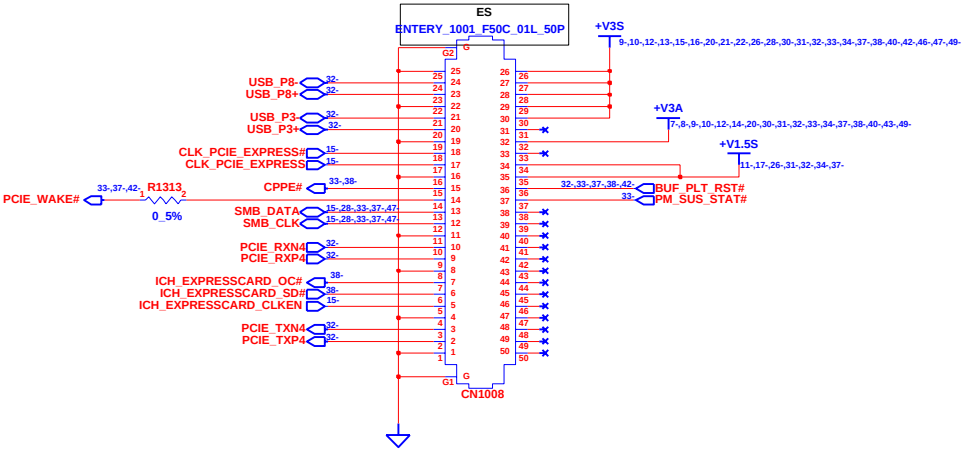

Conn to AUDIO BOARD

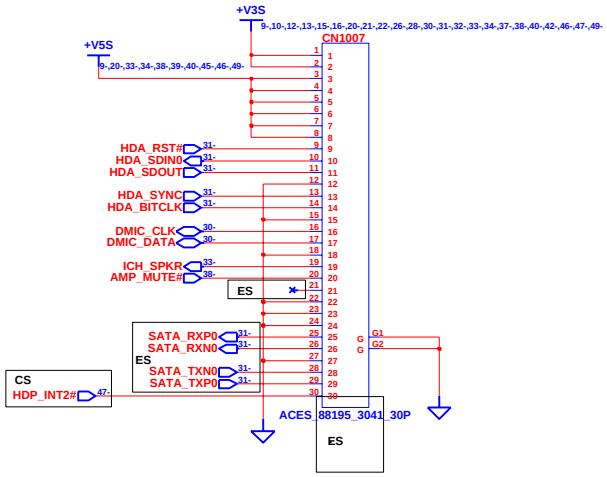

INVENTEC

TITLE			
V13TL			
IO Connector			
SIZE	CODE	DOC. NUMBER	REV
A3	CS	*1310A22966-0-MTR*	*A01*

CHANGE by | *14-Sep-2009* | SHEET 40 OF 49

USB & eSATA

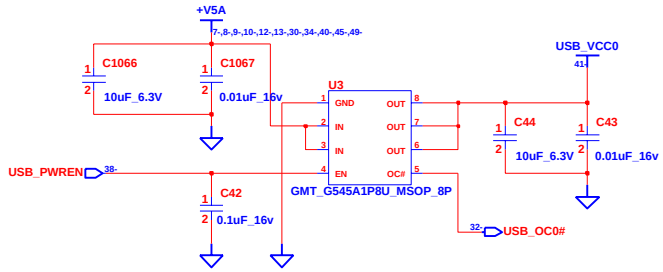

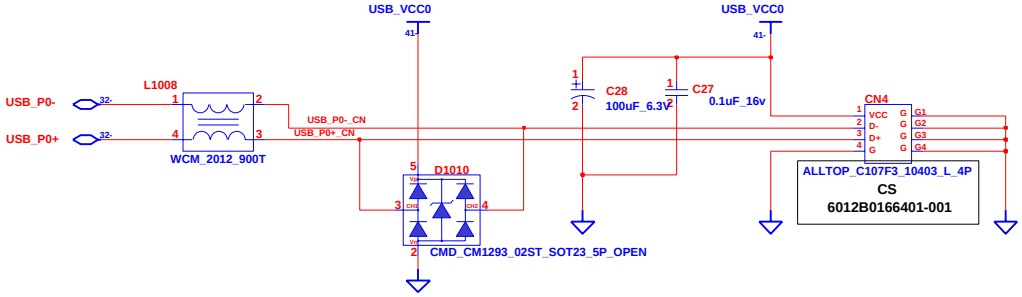

USB 0

eSATA & USB combo

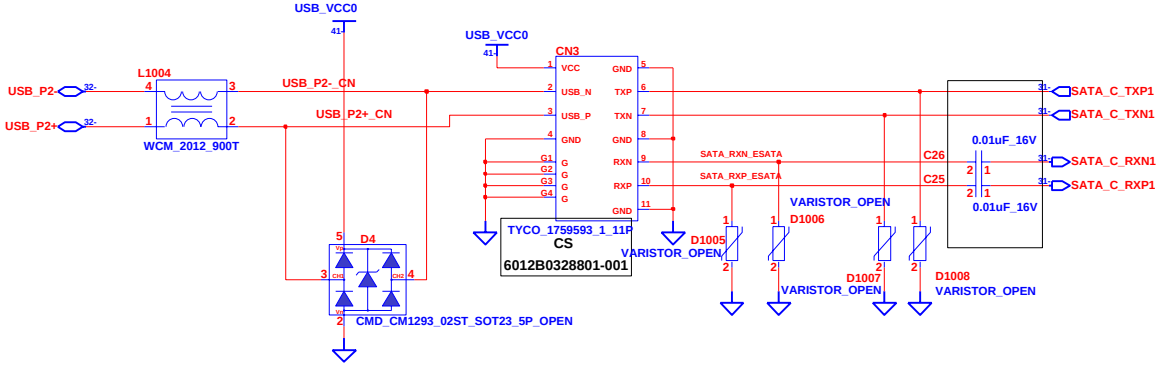

INVENTEC			
TITLE V13TL USB & eSATA			
SIZE A3	CODE CS	DOC. NUMBER 1310A22966-0-MTR	REV A01
CHANGE by	14-Sep-2009	SHEET 41 OF 49	

LAN CONTROLLER

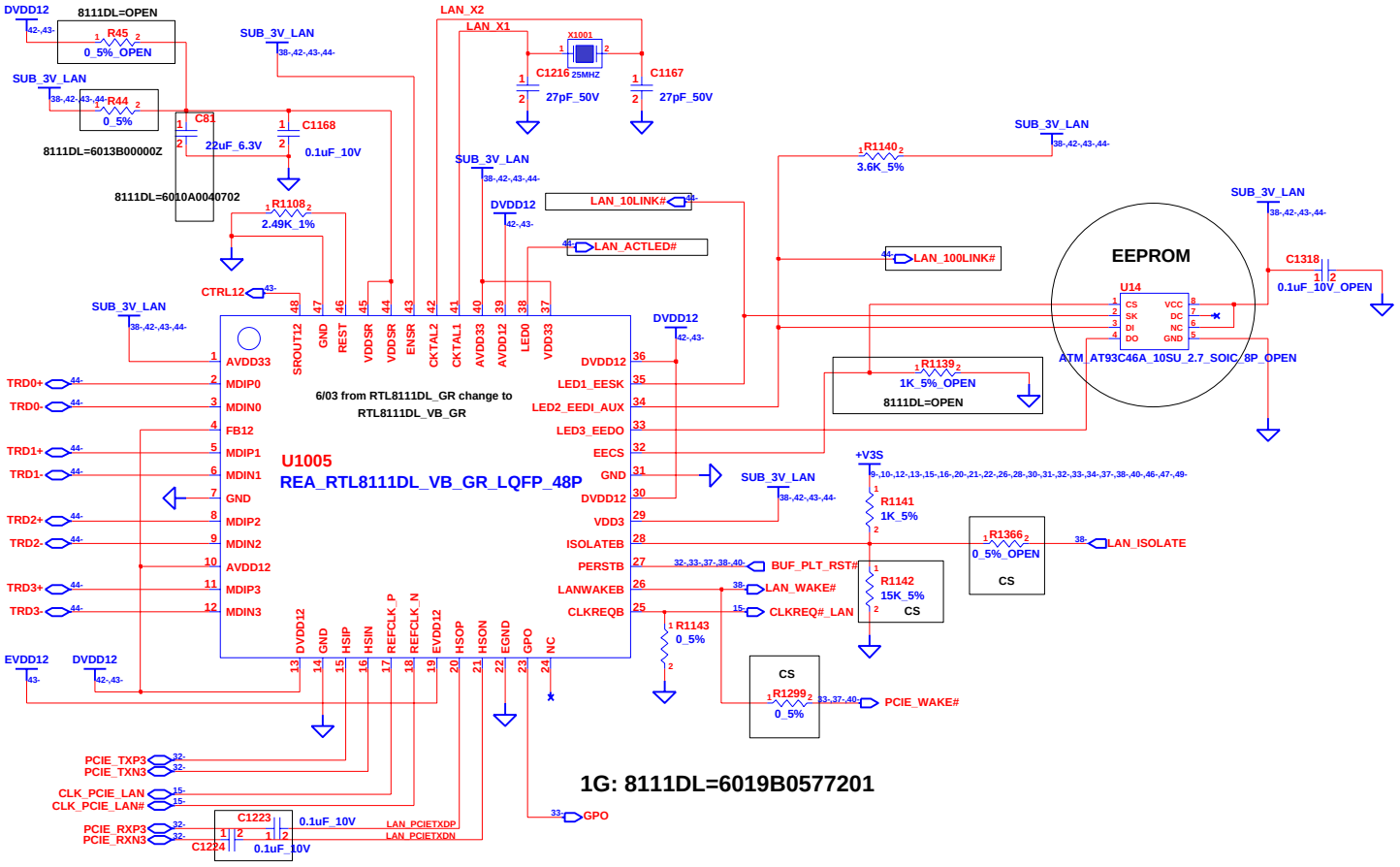

INVENTEC

TITLE V13TL
LAN PHY

SIZE	CODE	DOC. NUMBER	REV
A3	CS	1310A22966-0-MTR	A01

CHANGE by 14-Sep-2009

SHEET 42 OF 49

LAN POWER

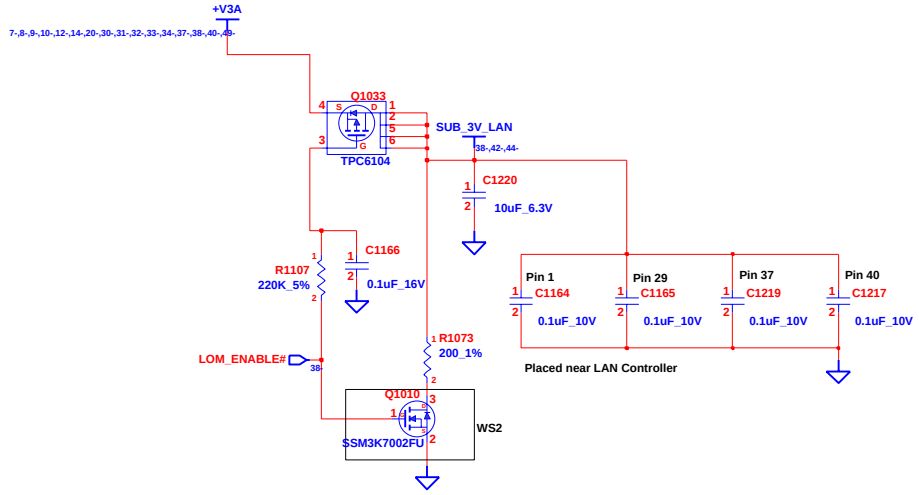

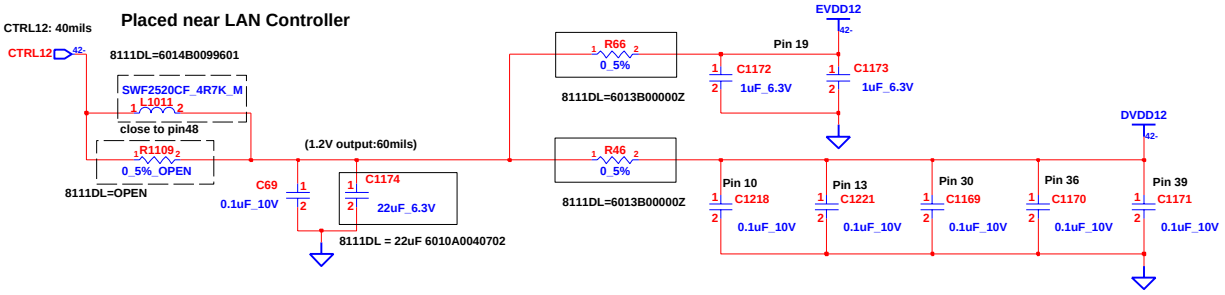

INVENTEC

TITLE			
V13TL LAN POWER			
SIZE	CODE	DOC. NUMBER	REV
A3	CS	1310A22966-0-MTR	A01

CHANGE by | 14-Sep-2009 | SHEET 43 OF 49

RJ45

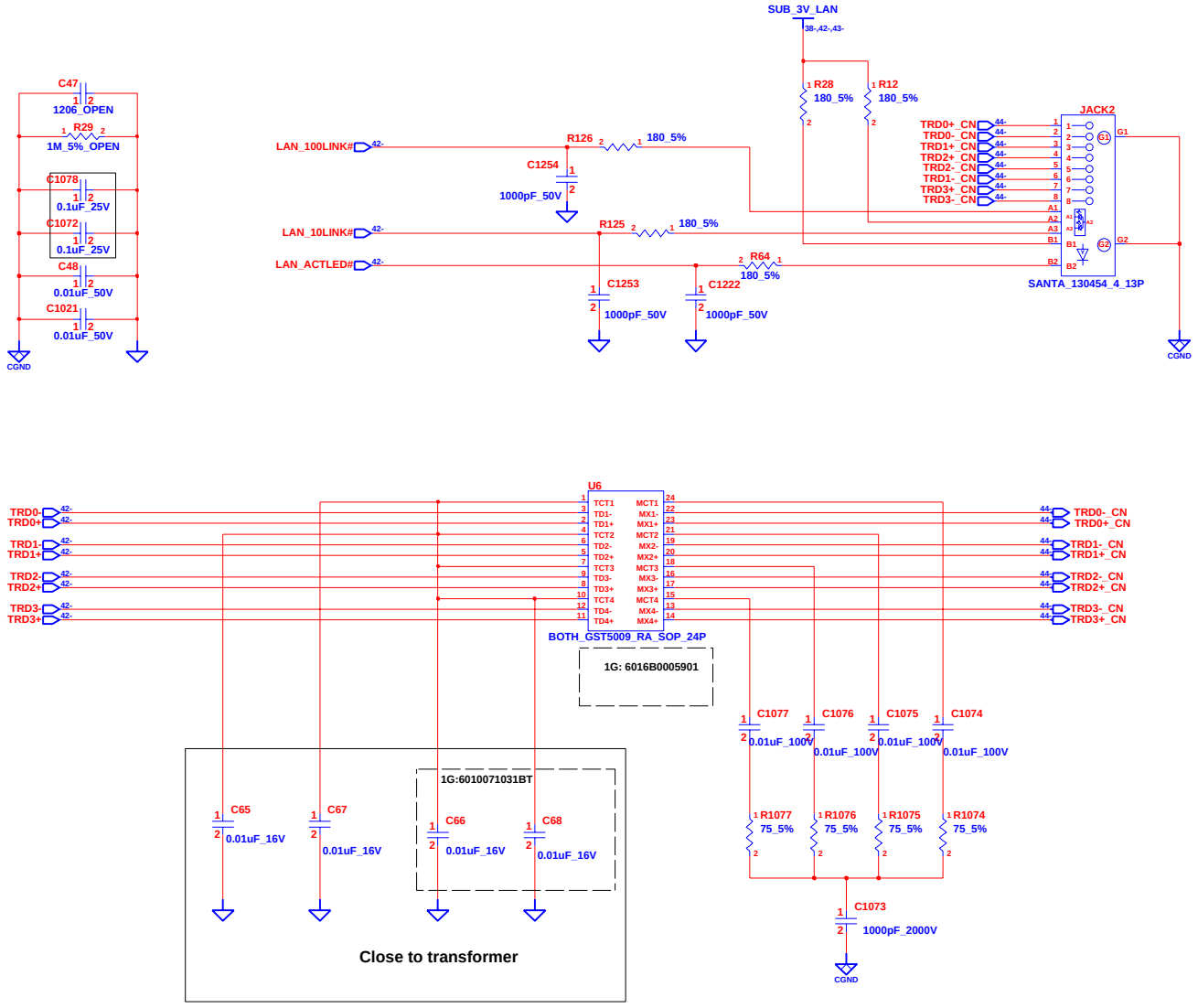

INVENTEC			
TITLE V13TL RJ45			
SIZE A3	CODE CS	DOC. NUMBER 1310A22966-0-MTR	REV A01
CHANGE by	14-Sep-2009	SHEET 44 OF 49	

PWR BTN & LED

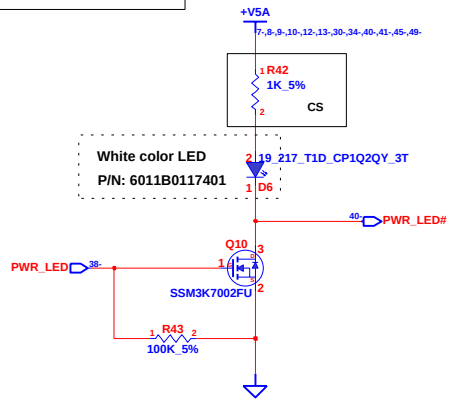

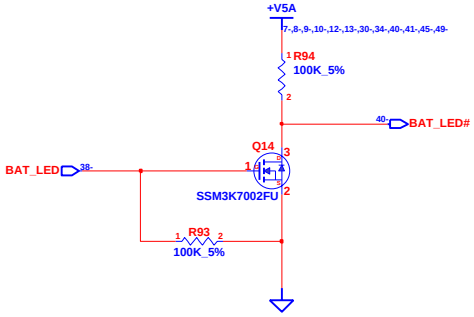

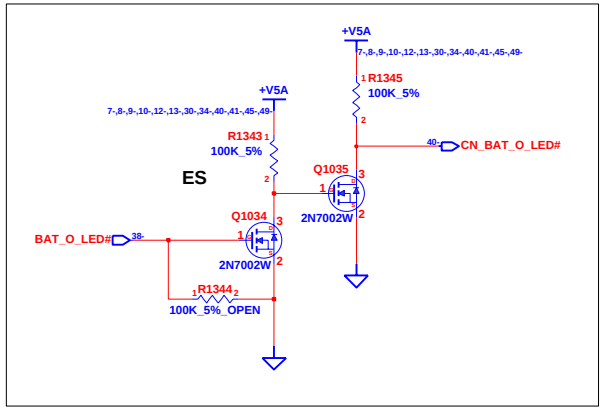

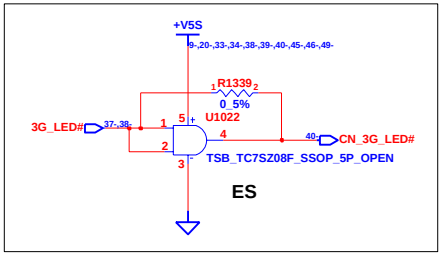

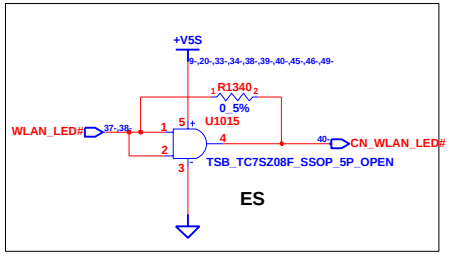

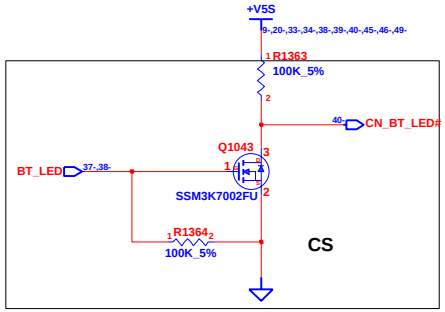

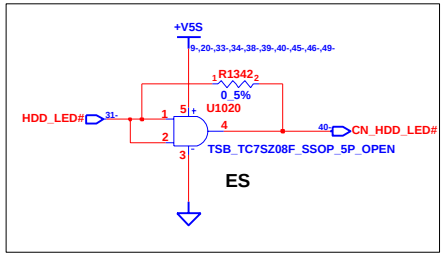

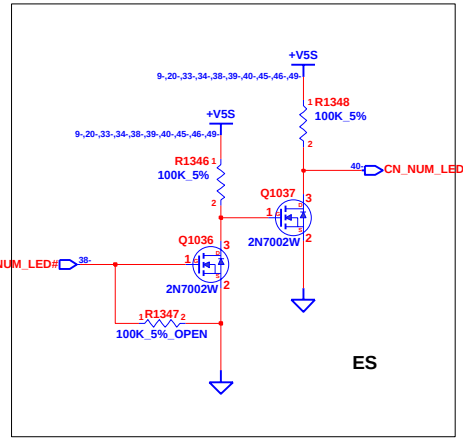

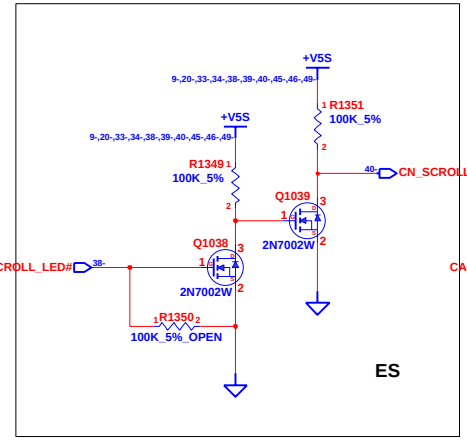

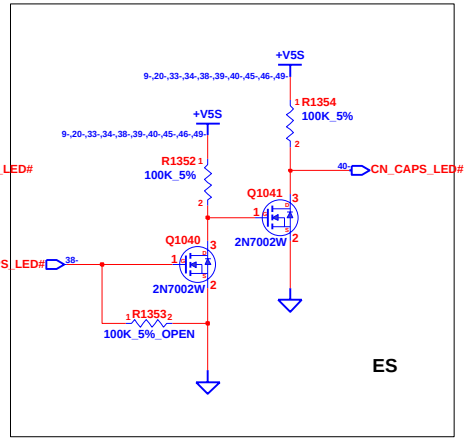

POWER BUTTON

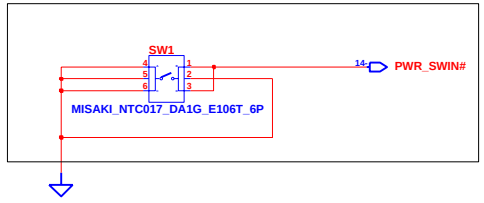

INVENTEC			
TITLE V13TL PWR BTN & LED			
SIZE A3	CODE CS	DOC. NUMBER 1310A22966-0-MTR	REV A01
CHANGE by	14-Sep-2009	SHEET 45 OF 49	

CRT

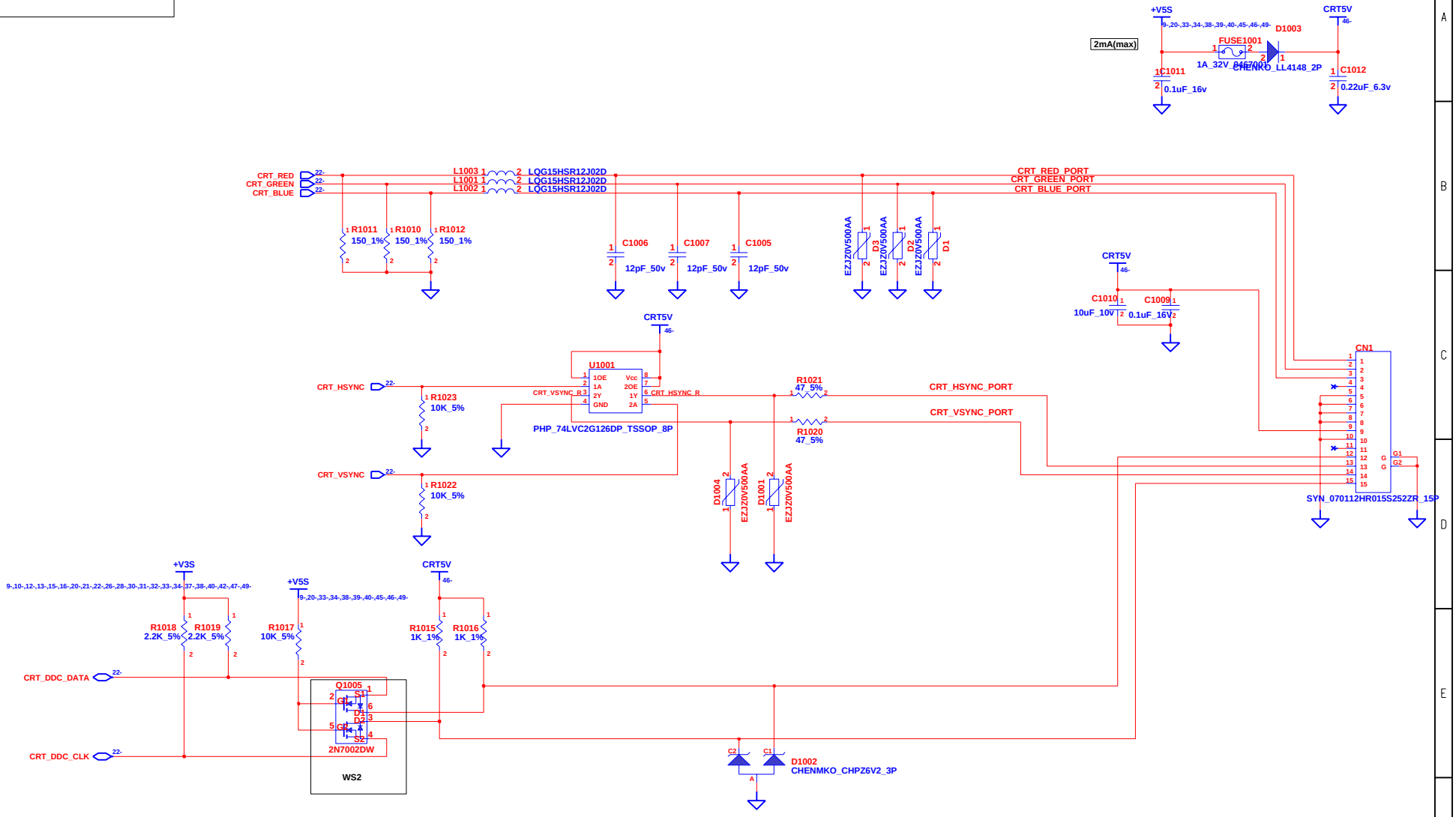

INVENTEC			
TITLE V13TL CRT			
SIZE A3	CODE CS	DOC. NUMBER 1310A22966-0-MTR	REV A01
CHANGE by	14-Sep-2009	SHEET 46 OF 49	

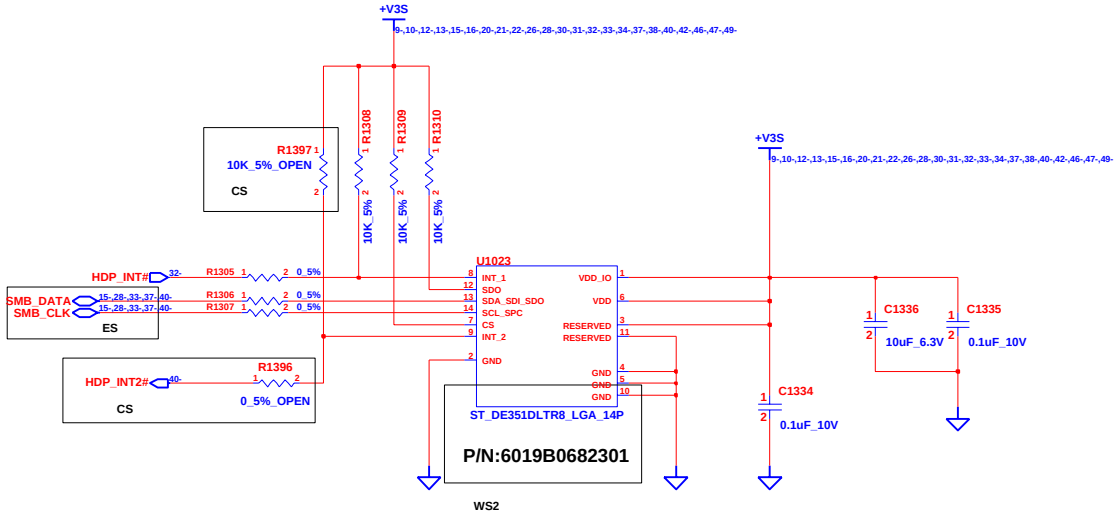

INVENTEC			
TITLE V13TL 3D sensor			
SIZE A3	CODE CS	DOC. NUMBER 1310A22966-0-MTR	REV A01
CHANGE by	14-Sep-2009	SHEET 47 OF 49